Electronic
TUBES

Ham News

Copyright 1954, by General Electric Company

JANUARY-FEBRUARY, 1954 VOL. 9—NO. 1

ABOUT POWER SUPPLIES

BETTER DYNAMIC CHARACTERISTICS
MEAN BETTER OUTPUT ON CW, AM AND SSB

Here, for the first time, is a revealing discussion of how transient oscillations in the conventional power supply filter spoil the performance of an otherwise good rig—and what can be done to correct the difficulty.

The next issue of G-E HAM NEWS will contain design and construction specifications for 750-volt and 1500-volt supplies employing the principles discussed here.

Contents

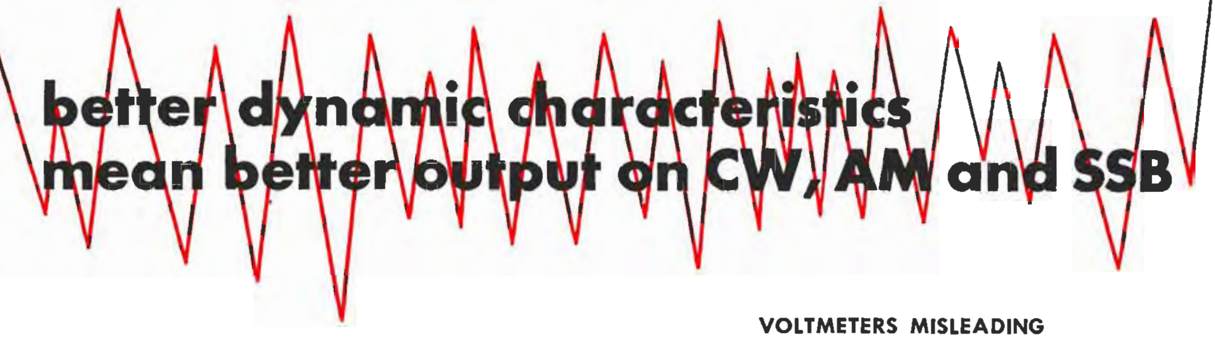

better dynamic characteristics mean better output on CW, AM and SSB

What is dynamic regulation in a power supply? Because the literature in this field is exceedingly sparse, perhaps a good way to start is to take two common definitions and directly relate them to the subject at hand, thus:

Static—Relating to forces in equilibrium (as d-c plate voltage and current in a rig transmitting a continuous unmodulated carrier).

Dynamic—Relating to moving forces (as d-c plate voltage and current under typical operating conditions in the average amateur CW, AM or SSB rig).

Keeping these definitions in mind will help in understanding just what goes on inside the conventional plate power supply which ordinarily consists of a center-tapped step-up transformer, rectifier tubes, and a two-section choke-input filter to reduce ripple. Since such supplies have been used since the introduction of the mercury-vapor rectifier, one might think that just about all the "bugs" would have been smoked out by now. Well, many bugs have been eliminated and, as a consequence, manufacturers of transformers and chokes now proudly offer what they term "matched power supplies"—sets of components for which they publish ratings, voltage regulation curves, and ripple output to be expected. These "matched" components make up power supplies that do perform as the published data indicates.

LOSS OF VOLTAGE

However, poor *dynamic* regulation in these conventional power supplies means distortion of signal output —alteration of actual radiated intelligence—almost without exception in CW, AM and SSB rigs. These faults exist no matter how good a *static* regulation figure is indicated by d-c input instrumentation. This comes about in the conventional power supply because transient oscillations excited in the filter rob the rig of voltage during a sizable portion of the time it is sorely needed. Hams who light-heartedly pass this effect off as "instantaneous," thereby implying it is of no consequence, may want to examine their power supplies more critically after studying the test data presented below.

Consider the meaning of the voltage regulation curve usually given for the ordinary rectifier-filter combination. This is a "static" curve, obtained by loading the supply to certain currents, reading the voltages across each load, and then plotting the results. Such a curve is useful, but it tells us only what the ***average*** voltage will be at any ***average*** current value—***because the instruments used to measure these values respond only to average quantities.*** Figure 1 shows just such an acceptably good regulation curve in which the voltage drops about 10% or so from no load to full load on an ***average*** basis.

But is it the average load, voltage and current alone that we are interested in? What kind of loads do our amateur transmitters present to their respective power supplies? Do we transmit intelligence with average loads—or with a complex pattern of instantaneous loads?

VOLTMETERS MISLEADING

Consider the final stage of a CW transmitter. At key-up the load is zero, or, at most, a rather small one. When the key is closed, the maximum load current is drawn. Now does the power supply follow the same curve that was plotted under static or slowly varying loads? An ordinary voltmeter might lead one to think so.

But look at Figure 2! This is a photograph of a cathode-ray oscilloscope which shows how the voltage varies with time in the ordinary power supply when the load is suddenly applied as in keying a CW rig. The solid upper line shows the no-load output of the supply—820 volts; the lower solid line represents zero volts. The lower waving line is a 60-cycle timing wave which permits reading the actual load voltage (represented by the upper oscillating line) at any fraction of a second from the instant the load was applied. The spot on the oscilloscope was started as the key closed to a 200-milliampere load. (The steady current rating on the test supply is 250 milliamperes.)

Note how the load voltage dips suddenly to less than a third of the no-load voltage line, then wildly overshoots the line and oscillates about until it finally settles down to the average loaded voltage of 760 volts—which is the same as the static loaded output voltage shown in the curve of Figure 1 for a 200-milliampere load.

(Incidentally, the ripple under load is visible on the right-hand portion of the load voltage curve of Figure 2, but is fairly small compared with the extravagant excursion of the voltage in the period immediately following the application of the load.)

A d-c voltmeter that was connected across the line at the same time merely dropped from 820 to 760 volts and gave no indication of the actual turmoil immediately after keying!

EFFECT ON CW OPERATION

Is this turmoil anything to worry about? Well, the final stage in a CW transmitter generally runs Class C, and the transient oscillation shown across the power supply modulates each character with that same wave form quite independently of any keying filter that may be provided for click reduction. This, then, is the signal envelope—somewhat poorer than ideal!

How long is a dot or a dash in seconds? That depends on the operator for the most part, of course. But this transient oscillation certainly lasts for a considerable portion of the average CW dot or dash, because as can be seen from the timing wave of Figure 2, the voltage does not settle down to a steady ripple until more than a tenth of a second has elapsed. And as anyone who has played with timing in radio or photography work knows, a tenth of a second is far from what is normally thought of as "instantaneous."

When the load is removed (key up), the power supply voltage behaves as photographed in Figure 3—another wild peak, with the oscillation finally settling down to the no-load line. Of course, in this case there is no "on the air" effect, but the filter condensers and all other connected equipment are subjected once

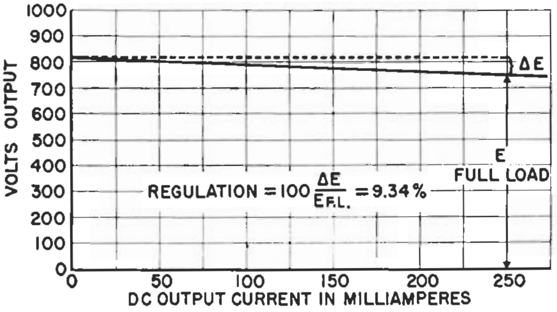

FIG. 1 *Static regulation curve (C_a, C_b any value)*

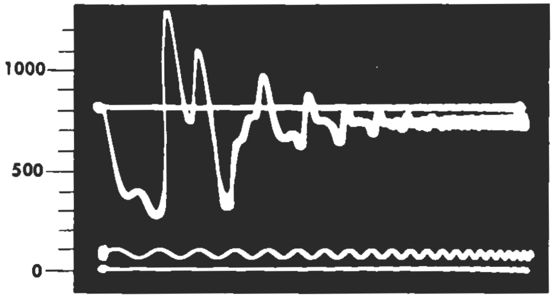

FIG. 2 *Load applied ($C_a = C_b = 2$ mfd)*

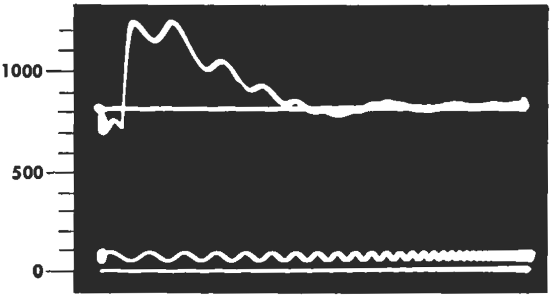

FIG. 3 *Load removed ($C_a = C_b = 2$ mfd)*

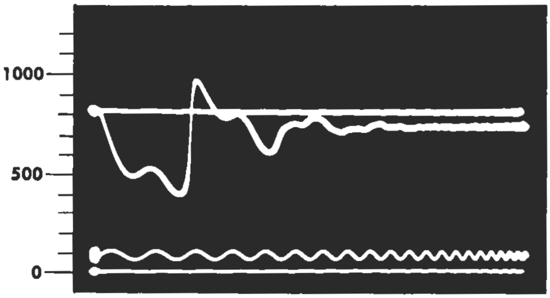

FIG. 4 *Load applied ($C_a = C_b = 5$ mfd)*

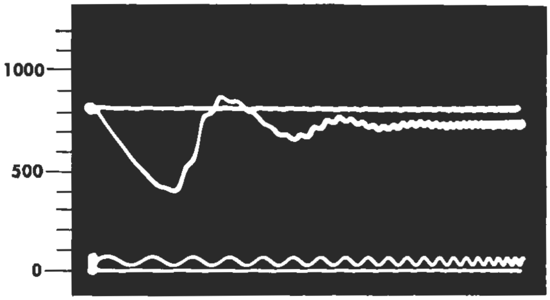

FIG. 5 *Load applied ($C_a = 0$; $C_b = 10$ mfd)*

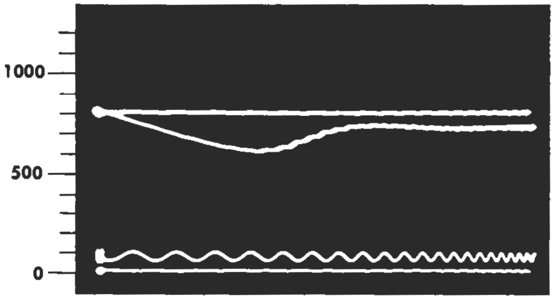

FIG. 6 *Load applied ($C_a = 0$; $C_b = 45$ mfd)*

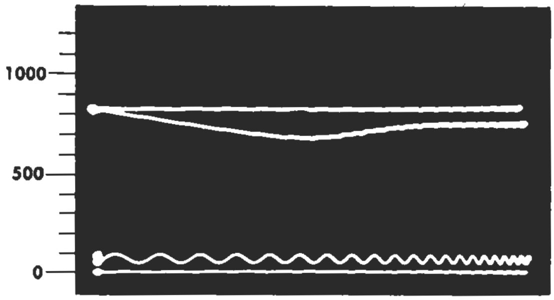

FIG. 7 *Load applied ($C_a = 0$; $C_b = 90$ mfd)*

FIG. 8 *Load removed ($C_a = 0$; $C_b = 90$ mfd)*

Above data taken with this 750 V/250 ma d-c supply (see text):

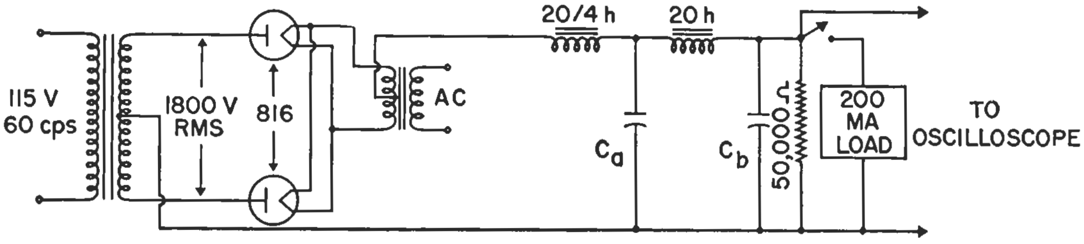

again to this voltage turmoil. This may explain why every once in a while a ham's whole rig is blown to kingdom come when he shuts it off.

The oscillograms shown apply only to single keying actions. Fast keying conditions intensify the transients shown in Figures 2 and 3.

EFFECT ON PHONE OPERATION

So much for CW loads on the common garden variety power supply. Now before the phone men start laughing up their sleeves at their brass-pounding brethren with "hand-modulated" rigs, let's take a close look at Class AB_1, AB_2, and B modulators operated with conventional power supplies.

It is characteristic of these modes of operation to draw average plate current which is a function of the modulating signal. Thus, the modulator load is similar to the on-off type of load experienced in a keyed CW transmitter, and the power supply transient so induced can be a real hazard to good quality. Because of the relatively sluggish action of a d-c plate current instrument (which tends to indicate current flow averaged over about half a second or so) the actual cyclic or syllabic transient load presented to the power supply is much greater than one would be led to believe by just reading the plate milliammeter.

What happens when the power supply behaves as in Figure 1? The answer is high distortion and loss of required peak power because most of the supply voltage just is not there part of the time it is needed by the modulator, and so the modulator tubes cannot draw the peaks of plate current that the grid drive on the modulator stage says should be drawn.

And remember, distortion tests made with steady tones will not show this "dynamic" distortion because the drain on a power supply induced by a steady tone is constant when averaged over one-half of the period of the test tone wave—relatively short compared to a filter transient which lasts more than a tenth of a second.

EFFECT ON SSB OPERATION

Single-sideband transmitters employing Class AB_1, AB_2, or B RF stages present the same type of load to their respective power supplies—and, as a result, also introduce considerable distortion in the radiated signal.

About the only types of emission in common use which do not suffer "on the air" losses as a result of transient filter oscillations are NBFM and FSK. (No transients are excited in the filter because the load is steady.) Linear amplifiers used with AM signals overcome this dynamic power supply regulation problem, but the carrier efficiency of this mode of operation is so low that use of linear amplifiers in amateur AM transmitters is not common. Similarly, constant current (or Heising) modulation for AM is another case where dynamic power supply regulation is not of primary importance. Grid modulation systems—control, screen or suppressor—also side-step the dynamic regulation problem but are inherently low-efficiency systems at best. In all these modes of operation, the only important power supply considerations are adequacy of rating and ripple filtering.

What can be done to improve the dynamic regulation of the conventional power supply? Let us follow the steps that were taken in the shack of W2KUJ to attack the problem.

THE SOLUTION

It became apparent that merely improving the ripple attenuation by adding more filter sections affected the dynamic regulation very little. So the first step was to increase the capacity of the existing filter from 2 microfarads to 5 microfarads per capacitor. The result appears in Figure 4—which shows excellent ripple filtering but only slightly reduced voltage excursions as compared with the transient of Figure 2.

Next, the two 5-microfarad capacitors of the two-section filter were connected in parallel to make a single-section filter (with the two chokes left in series). As shown in Figure 5, the voltage excursions are not greatly changed in magnitude, but have a less complex pattern—comparable, in fact, to that of a simple damped oscillation. But here again, the oscillation is excited in the filter by the suddenly-applied load.

The next step in the test was to use 45 microfarads of capacity as the final element of the filter. The dynamic regulation performance responded nicely, as shown in Figure 6. Note the reduction of magnitude of voltage swing and lowering of the resonant frequency of the filter as compared with Figures 2, 4 and 5.

FINAL DESIGN

This encouraged a final design in which 90 microfarads of capacity rendered the curve shown in Figure 7. Here the dynamic regulation is just slightly greater than the static regulation, which, incidentally, measures 9.34%—quite good enough for almost any amateur transmitter. The "break" characteristics of this final design are pictured in Figure 8. Use of more capacity would improve the dynamic characteristics of the power supply correspondingly because the resonant frequency of the filter would be lowered even farther. (For more detailed theory on the dynamic characteristics of plate power supplies see "Designer's Corner," page 6.)

USING FLUORESCENT TUBE AS TUNING INDICATOR

A sure indicator of maximum RF in your antenna is a fluorescent tube placed in the antenna field. The tube can be taped right to the antenna at the voltage node. Thus in tuning the final or the antenna coupler maximum input is indicated when the light is brightest. This is particularly convenient when your antenna is located in such a position that it can be seen from the window of the shack. The stunt helps especially when using a pi-network in the tank circuit without a coupler.

—S. BAXTER, VE7HK

(*Ed. Note*—No doubt the neighbors will be confused no end to see an antenna winking at them at about 30 wpm—until they suddenly tumble to the fact there may be some relationship between that blinking light up in the sky and the tweedy look their TV picture tube takes on at certain times.)

TV CHANNEL FREQUENCIES

Hams frequently have occasion to refer to TV frequencies and the following list is reprinted for reference. The list includes both picture and sound carrier frequencies in each of the 12 VHF TV ranges and the 70 UHF TV ranges. More and more of these channels are coming into use in the smaller communities throughout the country.

CHANNEL NO.	FREQUENCY RANGE MC	PICTURE CARRIER MC	SOUND CARRIER MC
2	54–60	55.25	59.75
3	60–66	61.25	65.75
4	66–72	67.25	71.75
5	76–82	77.25	81.75
6	82–88	83.25	87.75
7	174–180	175.25	179.75
8	180–186	181.25	185.75
9	186–192	187.25	191.75
10	192–198	193.25	197.75
11	198–204	199.25	203.75
12	204–210	205.25	209.75
13	210–216	211.25	215.75
14	470–476	471.25	475.75
15	476–482	477.25	481.75
16	482–488	483.25	487.75
17	488–494	489.25	493.75
18	494–500	495.25	499.75
19	500–506	501.25	505.75
20	506–512	507.25	511.75
21	512–518	513.25	517.75
22	518–524	519.25	523.75
23	524–530	525.25	529.75
24	530–536	531.25	535.75
25	536–542	537.25	541.75
26	542–548	543.25	547.75
27	548–554	549.25	553.75
28	554–560	555.25	559.75
29	560–566	561.25	565.75
30	566–572	567.25	571.75
31	572–578	573.25	577.75
32	578–584	579.25	583.75
33	584–590	585.25	589.75
34	590–596	591.25	595.75
35	596–602	597.25	601.75
36	602–608	603.25	607.75
37	608–614	609.25	613.75
38	614–620	615.25	619.75
39	620–626	621.25	625.75
40	626–632	627.25	631.75
41	632–638	633.25	637.75
42	638–644	639.25	643.75
43	644–650	645.25	649.75
44	650–656	651.25	655.75
45	656–662	657.25	661.75
46	662–668	663.25	667.75
47	668–674	669.25	673.75
48	674–680	675.25	679.75
49	680–686	681.25	685.75
50	686–692	687.25	691.75
51	692–698	693.25	697.75
52	698–704	699.25	703.75
53	704–710	705.25	709.75
54	710–716	711.25	715.75
55	716–722	717.25	721.75
56	722–728	723.25	727.75
57	728–734	729.25	733.75
58	734–740	735.25	739.75
59	740–746	741.25	745.75
60	746–752	747.25	751.75
61	752–758	753.25	757.75
62	758–764	759.25	763.75
63	764–770	765.25	769.75
64	770–776	771.25	775.75
65	776–782	777.25	781.75
66	782–788	783.25	787.75
67	788–794	789.25	793.75
68	794–800	795.25	799.75
69	800–806	801.25	805.75
70	806–812	807.25	811.75
71	812–818	813.25	817.75
72	818–824	819.25	823.75
73	824–830	825.25	829.75
74	830–836	831.25	835.75
75	836–842	837.25	841.75
76	842–848	843.25	847.75
77	848–854	849.25	853.75
78	854–860	855.25	859.75
79	860–866	861.25	865.75
80	866–872	867.25	871.75
81	872–878	873.25	877.75
82	878–884	879.25	883.75
83	884–890	885.25	889.75

Designer's CORNER

Some time ago when checking out my SSB transmitter I ran into a dismaying situation.

Checks with a steady audio tone showed the rig was putting out all that could be asked for. But voice peaks measured on the oscilloscope would not come anywhere near the same level. The cause was not easy to determine, but it finally turned out to be tremendous voltage drops in the power supply during a considerable portion of each syllable as a result of filter oscillations. In a more recent test I actually photographed these voltage drops, as pictured in the foregoing article.

The problem is one which involves effective damping of filter resonance or reducing the coupling between the load variations and the resonant system of filter chokes and capacitors—or both—without sacrificing efficiency or static regulation, and without overloading the rectifier tubes or any other power supply component. All this must be done without increasing the cost of the final design appreciably over that of the conventional power supply. It sounds a lot like "eating your cake and having it too," since what we have seen in the oscillograms of Figures 2, 3, 4 and 5 is commonly accepted although rarely suspected performance.

THE SOLUTION

The practical solution of the filter resonance problem involves these basic steps:

1. Reducing the Q of the filter without increasing its series resistance, and
2. Increasing the energy storage in the last filter element.

The first step could be achieved by shunting capacitors and chokes with resistors, but if this is done the peak current handled by the rectifiers would go up, the static regulation would be poorer, and a great deal of power would be wasted in the damping resistors—that is, the efficiency of the power supply would be low.

Since the Q of the choke is $\frac{X_L,}{R}$ where X_L is the inductive reactance at a given frequency, and R is the effective series resistance of the choke at the frequency considered, and since the Q of the filter is equal to the Q of the choke (if the capacitor has relatively little effective series resistance), Q can be lowered by decreasing X_L or increasing R. If R is increased the static regulation will suffer as a consequence, so the approach should be through decreased X_L. Since $X_L = 2\pi f L$ a low product of $f \times L$ is desired. In the interest of efficiency and static regulation, practical limits are placed on the value of L, the inductance of the choke, so the factor *f* is the only one left to be altered.

NEED LOWER FILTER Q

What determines f? The resonant frequency of the filter is the quantity f in question. To a first approximation, $f = \frac{1}{2\pi LC,}$ where C is the capacity of the filter condenser with which L resonates. Therefore, the Q of the filter can be lowered by increasing C, and this helps in attainment of the second basic step listed above.

What would have happened if L had been increased by a factor of 9, instead of increasing C by the same factor? The resonant frequency would have been lowered as much, but the series resistance probably would increase by about the same factor (it certainly would if 9 times the number of identical chokes had been used) and the static regulation would be nine times that indicated by Figures 1, 2, 4, 5, 6, and 7, or 84%, a drop from 820 volts, no load, to 131 volts at 200 MA load! The Q would be the same in the filter, but the total performance would be so sadly degraded that such a supply would be valueless except for salvage of parts.

In some cases, the best design would be one in which both the chokes and the condensers were increased in value until suitable dynamic performance was obtained. In high-voltage supplies this begins to pay dividends since the "critical"[1] inductance increases with voltage for a given minimum or bleeder current drain, and high-voltage capacitors begin to get expensive. Static regulation depends on the DC resistance of the chokes (together with the equivalent series resistance due to the plate transformer) but a given total equivalent resistance in the chokes and transformer yields less *percentage* voltage drop as the operating voltage is increased.

TWO POWER SUPPLY DESIGNS

We have designed two power supplies which promise to provide excellent dynamic regulation, good static regulation and good ripple filtering. Best of all, these supplies are not expensive ones. The first supply has a continuous rating of 750 volts/250 MA output for moderate and low power applications, while the second is rated at 1500 volts/250 MA. One nice thing about it all is that the builder may utilize the principle we have explained and proven in order to build other supplies which exhibit equally good (or better) dynamic regulation. Either power supply is ideally suited for CW transmitters, Class B modulators, linear amplifiers (such as the Lazy Linear[2] or the Power Peaker[3]), or any application where the voltage and average current requirements are within the ratings given. The final samples of these two power supplies were not completed by the time this issue of G-E HAM NEWS went to press, but construction details will be given in the March-April issue.

—*W2KUJ*

---

[1] See G-E HAM NEWS Volume 7, No. 2, page 6; also, the ARRL Handbook. In these treatments only static regulation is considered. Good background material, though.

[2] G-E HAM NEWS Volume 4, No. 4

[3] G-E HAM NEWS Volume 7, No. 5

HOW TO GET G-E HAM NEWS

G-E HAM NEWS may be obtained free from G-E tube distributors—or, for $1 per year G.E. will mail HAM NEWS to your home. Write to: G-E HAM NEWS, Tube Department, General Electric Co., Schenectady 5, N. Y. This subscription plan is available to amateurs only in the United States, Alaska, Hawaii and the Panama Canal Zone. Amateurs in Canada should address requests to Canadian General Electric Co., Ltd., Electronic Tube Marketing Section, 830 Lansdowne Ave., Toronto, Ontario, Canada. In all other countries G-E HAM NEWS may be obtained through International General Electric distributors.

SWEEPING *the* SPECTRUM

Seems like one thing that plagues most hams is a perpetual list of unfinished projects. Perhaps it's partly a general failing of the human race to bite off more than can be chewed. But as far as hams go, a lot of the trouble comes from what we might call "over-enthusiasm." In the field of ham radio there are so many things to do, so many types of equipment that can be built.

But one of the fellows here dropped a comment a while ago which can help keep down the number of unfinished projects—by keeping down the list of projects. We had asked him if he would like to see an article published on a certain piece of equipment and he shot right back at us: "What would I use it for? I don't keep anything in the shack I don't use."

That's an admirable policy, we thought. We made a New Year's resolution and that night cleaned house. And we found that we get along very nicely without the old junk.

* * *

One of the nicest things about ham radio is the readiness of the fraternity to jump in and help whenever and wherever help is needed. And we don't mean just physical emergencies—we mean spiritual emergencies, too. As an example, the editor was telling us the other day how each member of the Northern N. J. Radio Association (W2DAY) sent a QSL card to a local lad who was afflicted with cerebral palsy. The interest that these total strangers seemed to show in his life perked the boy up, and his folks got him a communications receiver. Then the hams began to mention the lad's name frequently in their local rag chews. He became an avid SWL, a silent member of the local networks—and still hopes some day to be able to get his ticket. Incidentally, he's still collecting QSL cards and if anyone wants to send him one, he'd sure appreciate it. Here's the QTH: Richard Ernst, 242 Wales Avenue, River Edge, New Jersey.

* * *

A handy tip for both mobilers and fixed stations to keep in mind comes via "Zero Beat," bulletin of the Providence (R. I.) Radio Association: If called upon to report an accident along an unfamiliar stretch of highway, the location can be pinpointed by reporting the number on the nearest utility pole. . . . "Zero Beat" also expresses amazement at the things you hear on 2 meters. One Sunday a.m. this mail was read: "take 3 cups loose cranberries, 1½ cups raisins, 1 cup sugar, 2 tbls flour, ½ cup water, and a pinch of salt for good luck. Boil until cranberries pop, pour into pie shell, cover with strips of dough and bake." Neither "Zero Beat" nor G-E HAM NEWS assumes any responsibility. . . . "Sparks," published by the Tri-State ARA at Evansville, Indiana, reports a 3-kw generator has been ***donated*** to the club by a local electric company.

* * *

"Ham Hum," bulletin of the Ak-Sar-Ben RC of Omaha (W0EQU), passes on this idea: Shim up the front of the receiver and transmitter with a length of 2 x 4 shaped and painted to match the equipment. They say it makes the dials and meters more readable and gives the equipment a novel appearance. . . . The mobile section of the Michiana ARC (W9AB) has been engaging in a community service which may be of interest to others—parade duty. They patrol local parades, aiding in keeping the parade units spaced and providing LL hook-ups when emergencies or other unforeseen problems arise, according to the club bulletin, "Marc Sparks."

* * *

W5KNY passes on a mobile noise reduction idea which he apparently got from W5DAS: Provide both the auto BC set and the converter with a hot A lead direct from the battery—a lead with a well-grounded shield. They say this can take off a good thick layer of mobile noise. . . . A TV serviceman in California has come up with a stunt that helps in tracking down an intermittent failure. He uses an infrared heat lamp to bring a benched chassis up to its normal in-the-cabinet operating temperature. This stunt is reported in the current issue of "Techni-Talk," our Tube Department publication for TV servicemen—available to them through authorized G-E tube distributors.

* * *

It's reported K0WBF is maintaining a constant daytime watch on 3983 kc for any "CQ Omaha" in anticipation of communications emergencies in these months of snow, sleet and ice. . . . The Detroit Amateur Radio Association (W8ZZ) has been hashing over the problems involved in delivering traffic from boys overseas asking their folks to send some money. When the citizen who doesn't know much, if anything, about ham radio, gets a message that his or her boy wants money—well, it often leads to misunderstanding and suspicion. Some hams now refuse to handle such traffic; others feel that all traffic must be handled. In any event, delivering such a message by phone is a ticklish problem. Those called upon to telephone such messages are cautioned to think out carefully beforehand just how to answer the inevitable questioning of the addressee. The boys who have had trouble say it can be worse than handling a TVI complaint!

—*Lighthouse Larry*

Trapping Transients

HOW TO PHOTOGRAPH VOLTAGE DROPS

The oscillograms shown on page 3 of this issue of G-E HAM NEWS were taken with a 5-inch cathode-ray oscilloscope fitted with an oscillograph camera. In this photograph Don Norgaard, W2KUJ, is shown just before he opens the shutter of the camera and applies the load to a power supply he is testing for dynamic regulation.

The power supply output voltage is fed to the vertical deflection plates of the oscilloscope through a voltage divider while a single horizontal sweep is started by the same switch that applies the load to the power supply. The load, incidentally, was a vacuum tube biased to cut off for no-load conditions and made to take load by controlling the grid voltage with the switch. This type of load simulated the load applied to a power supply feeding a keyed stage in a transmitter.

On one occasion the transient voltage developed in the power supply was so high that the multiplier resistor of a voltmeter reading the output voltage of the supply under test arced across and burned out the meter. That time the voltmeter *did* give some indication of the turmoil in the power supply following a suddenly applied load!

Don has been a regular contributor to G-E HAM NEWS and has been responsible for the design of the *Harmoniker*, the *Lazy Linear*, the *Signal Slicer*, the *SSB, Jr.*, and other pieces of ham gear described in G-E HAM NEWS.

Ham News

Available FREE from
G-E Electronic Tube Distributors

Printed in U.S.A.

A Bi-monthly Publication
TUBE DEPARTMENT
GENERAL ELECTRIC
Schenectady 5, N. Y.
In Canada, Canadian General Electric Company, Ltd., (Toronto, Ont.)
S. E. McCALLUM, W2ZBY—EDITOR

Electronic TUBES

Ham News

MARCH–APRIL, 1954

VOL. 9—NO. 2

MORE ABOUT POWER SUPPLIES

TWO 250 MA PLATE POWER SUPPLIES WITH EXCELLENT DYNAMIC CHARACTERISTICS

also a power control unit

In the previous issue of G-E HAM NEWS we presented a discussion of the dynamic characteristics of plate power supplies ordinarily used with amateur transmitters and modulators—together with some design notes on how to improve said dynamic characteristics.

Here are two power supplies designed and constructed in such a way as to not only obtain unusually good dynamic regulation but also to keep cost to a minimum. To fully appreciate these two designs, we suggest you review the previous article. If you can't beg or borrow a copy of our January–February issue (Volume 9, No. 1), drop me a card.

—*Lighthouse Larry*

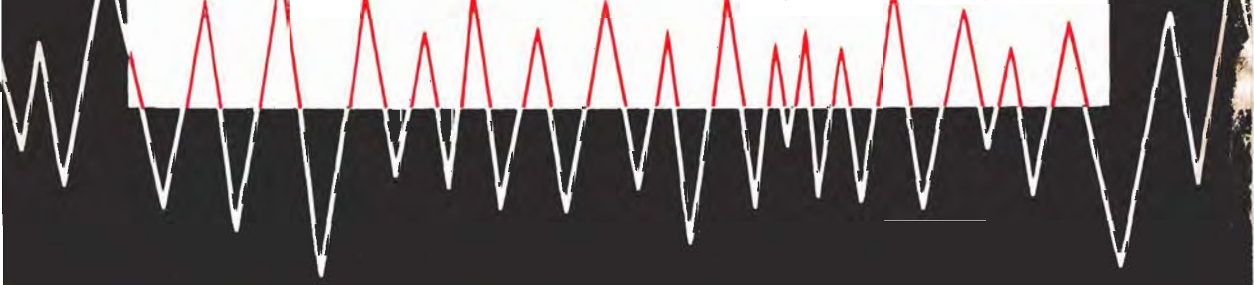

Contents

two power supplies

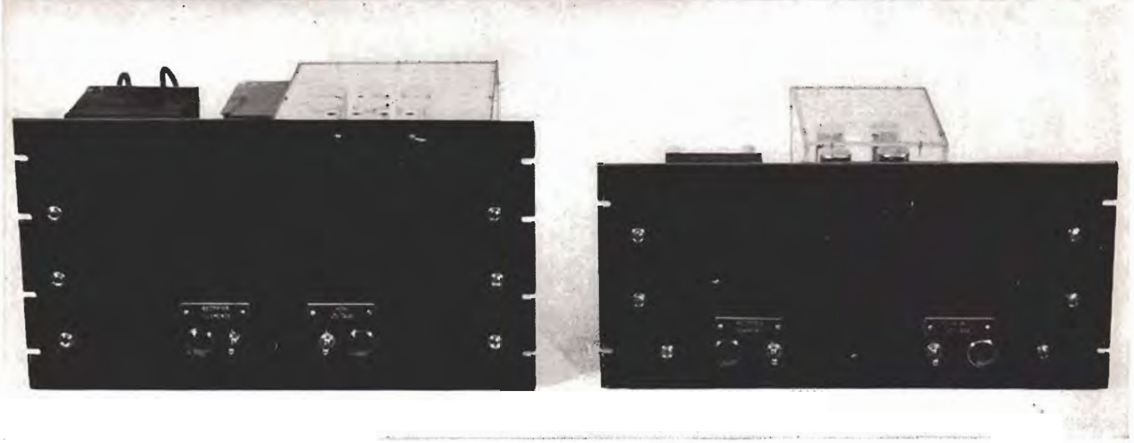

1500 VOLT

750 VOLT

The dynamic characteristics of the average amateur power supply are those characteristics which become apparent in the operation of the supply when it is in actual use under average amateur operating conditions. In most amateur operations this means rapid intermittent application and removal of widely varying loads.

Meters will not measure the extensive voltage drops and peaks which are induced by varying the load—and as a result it has become somewhat traditional to regard such voltage excursions as "instantaneous" and "of little consequence."

However, as demonstrated in the tests reported in the last issue of G-E HAM NEWS, these voltage excursions are somewhat more serious than is generally believed. The oscillograms showed that when normal load is applied d-c output voltage will drop to as low as a third of the no-load voltage, then wildly overshoot the no-load level, drop again, and so on—even in a power supply which has an acceptable static regulation figure.

Instantaneous oscillations? That depends on the definition of the word *instantaneous*. As these oscillations were actually photographed on an oscilloscope along with a 60-cycle timing wave, it was shown that the transient oscillations lasted well over a tenth of a second—enough time to competently modulate every CW character and distort at least a fair portion of the first syllable of every word a phone man utters.

Experiments showed the oscillations were directly related to the resonant frequency of the power supply filter—and that the simplest solution to the problem was to lower the resonant frequency by adding capacity to the filter. It was found that addition of sufficient capacity would smooth out the dynamic regulation curve so that it would nearly coincide with the conventional static regulation curve of the supply.

However, high-voltage oil capacitors cost money—lots of it. In order to economize, at least in the sense of not running these newly designed power supplies a great deal higher in cost than conventional supplies of the same ratings, electrolytic capacitors have been specified in series-parallel combinations together with voltage-equalizing resistors.

Electrolytic capacitors generally are, we believe, better than they are cracked up to be in amateur circles. True, they may not last as long as oil capacitors, but as they have been improved considerably since first introduced, it was felt they were well worth trying. Those who still feel squeamish about using electrolytics may, of course, put in oil capacitors of the same value with equally good results. However, it is felt the electrolytics offer more capacity per year, per dollar.

In obtaining the unusually high capacity via the series-parallel methods shown in the circuit diagrams, it is important to make sure that all the equalizing resistors are used. This will insure operation of each capacitor well within its voltage rating.

The can of each electrolytic capacitor is its negative terminal. The capacitors in the series arrangement at the negative (chassis) end of the string may be mounted directly on the chassis with the metal mounting rings supplied with each capacitor. However, the remaining capacitors must be installed with cans insulated not only from the chassis but also insulated from the cans of the capacitors higher up in the string. Careful examination of the circuit diagrams will make this clear.

To provide this insulation a variety of mounting methods will suggest themselves to the builder. The method shown here is to mount capacitors that must be insulated on a piece of textolite which in turn is mounted in a hole of appropriate size cut in the chassis.

In addition, it is strongly recommended that a shield be placed over those capacitors whose cans operate above ground. *This shield is to protect the operator—not the capacitors!* Remember that the can of an electrolytic capacitor is generally thought of, subconsciously, as being grounded. The builder may have

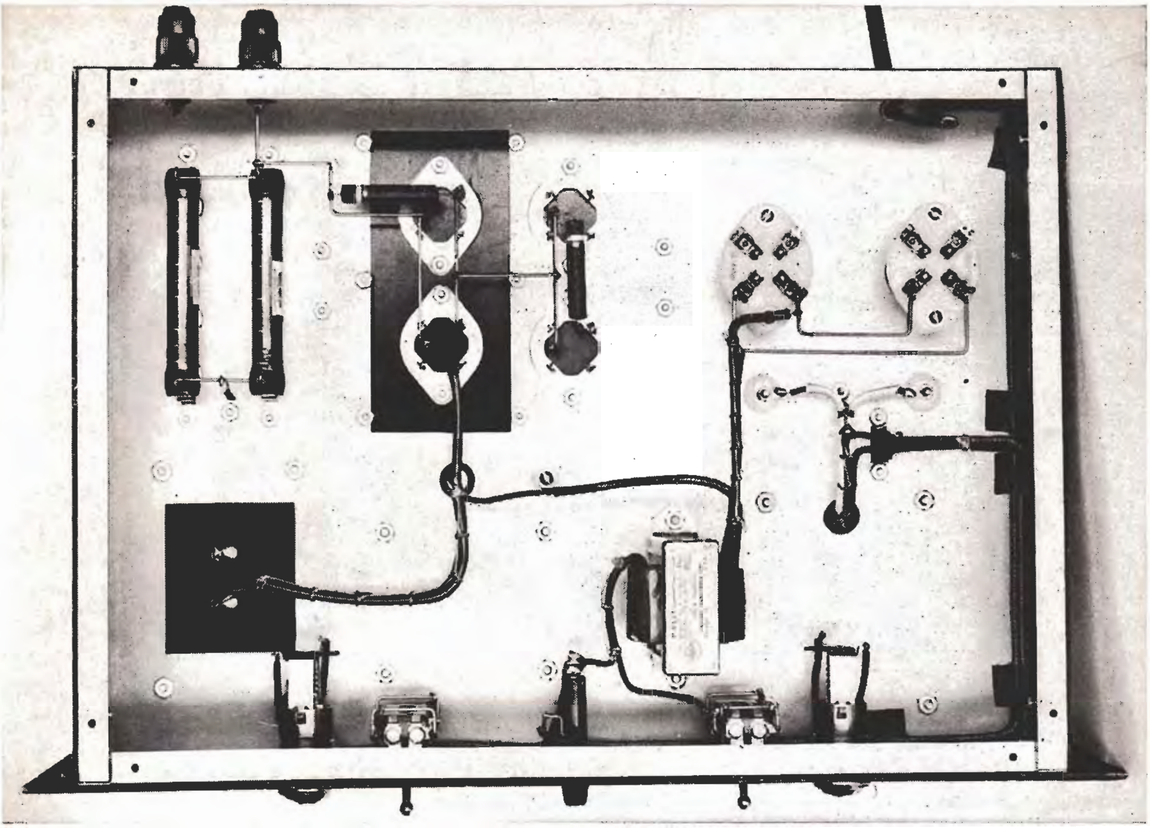

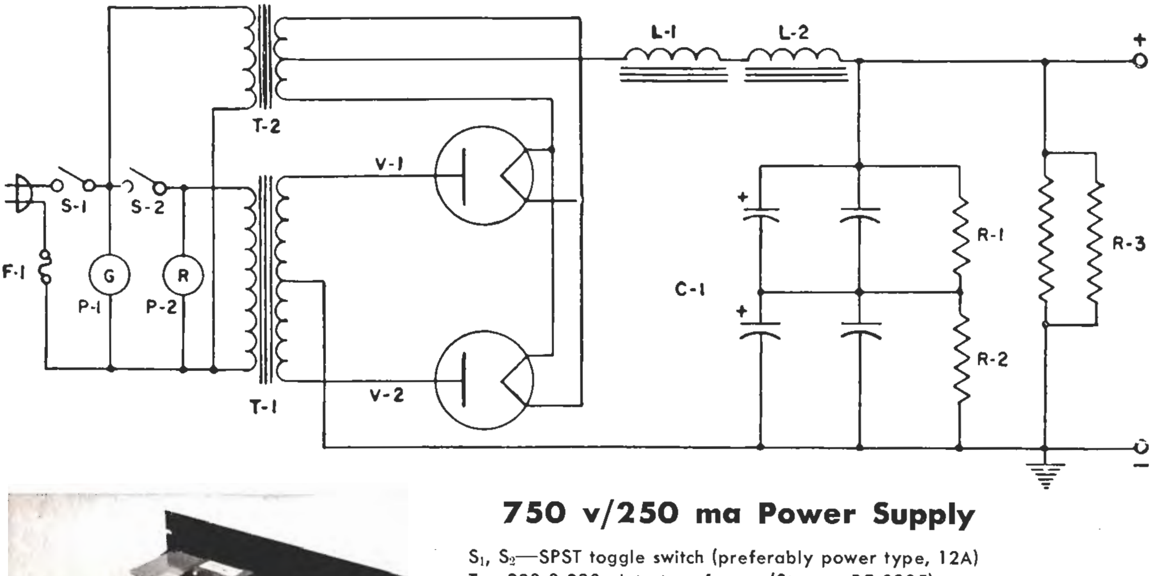

750 v/250 ma Power Supply

S_1, S_2—SPST toggle switch (preferably power type, 12A)
T_1—920-0-920 plate transformer (Stancor PC-8305)
T_2—2.5 v, 5A filament transformer (Stancor P-6133)
V_1, V_2—GL-816
L_1—20/4 h at 30/300 ma, 80 ohms D-C resistance swinging choke (Stancor C-1720)
L_2—20 h, 225 ma smoothing choke (UTC S-31)
C_1—125 or 90 mfd (4 Sprague TVL-1760 or 1850)
R_1, R_2—200,000 ohms, 2 w composition
R_3—50,000 ohms, 25 w (see text)
P_1, P_2—110 v pilot lamp
F_1—5A slow-blowing fuse

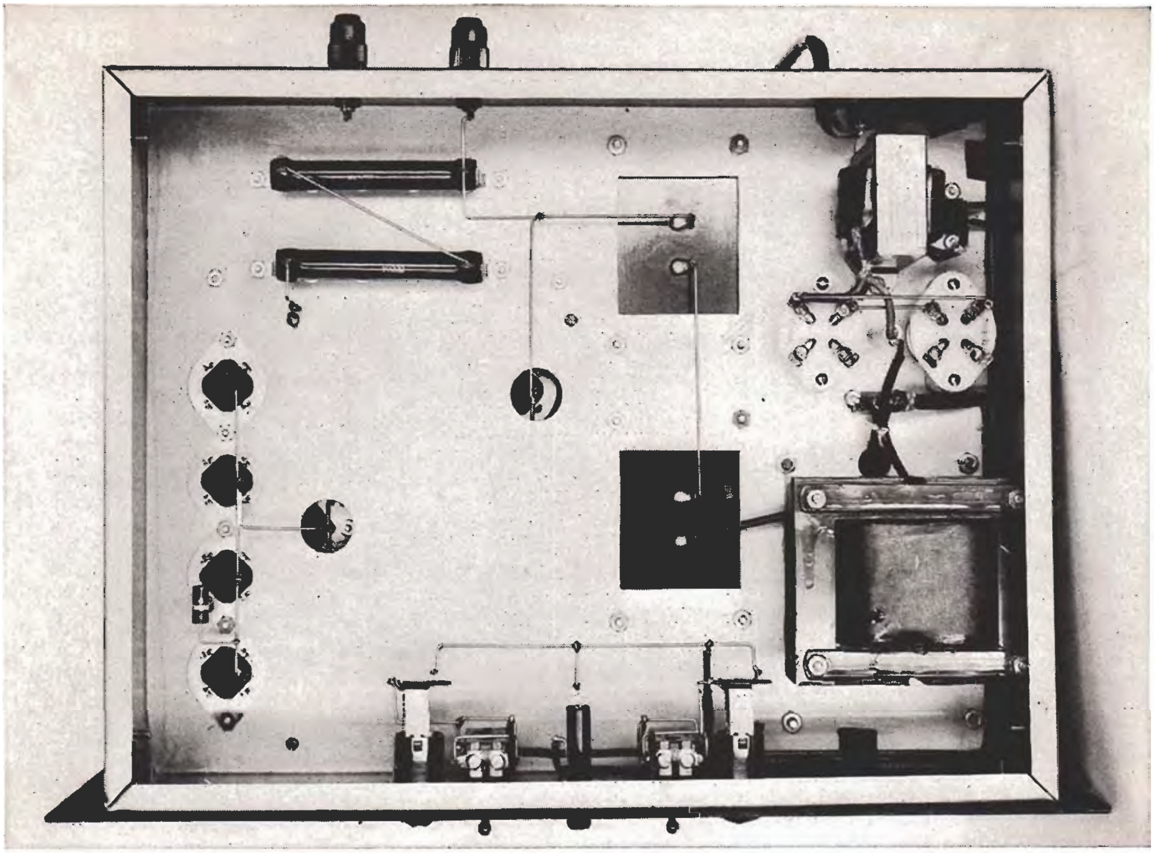

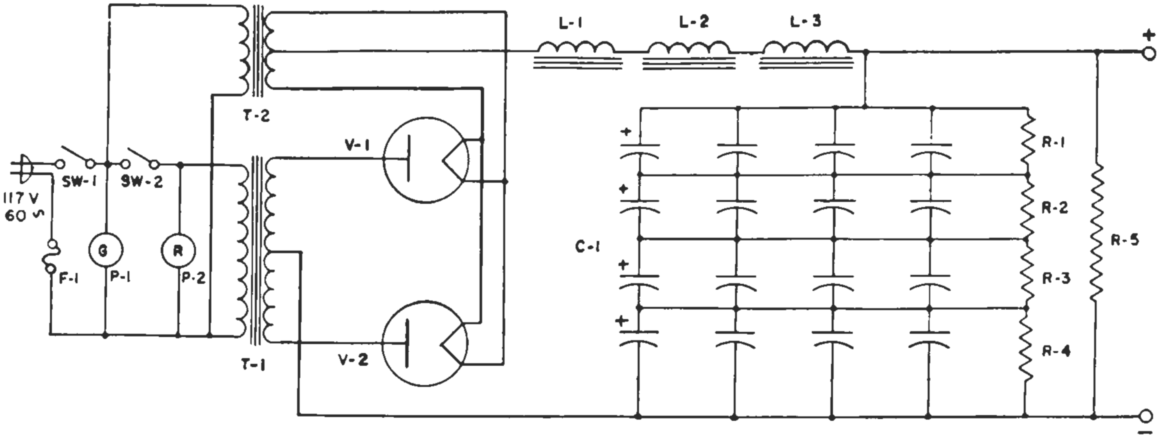

1500 v/250 ma Power Supply

S_1, S_2—SPST toggle switch (power type, 12A)
T_1—1790-0-1790 plate transformer (Stancor PT-8314)
T_2—2.5 v 5A filament transformer (Stancor P-6133)
V_1, V_2—GL-816
L_1—20/4 h at 30/300 ma, 80 ohms D-C resistance swinging choke (Stancor C-1720)
L_2, L_3—20 h, 225 ma smoothing choke (UTC S-31)
C_1—125 or 90 mfd (16 Sprague TVL-1760 or 1850)
R_1, R_2, R_3, R_4—100,000 ohms, 2 w composition
R_5—100,000 ohms, 50 w (see text)
P_1, P_2—110 v pilot lamp
F_1—10A slow-blowing fuse

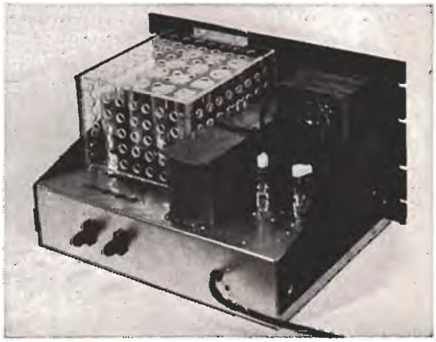

the danger fresh in his mind while he is constructing the power supply and for a relatively short time thereafter. But will he remember, say, a year from now when he opens the rig to service some component that some of those cans are well above ground? And will a visitor to the shack—or the junior operator—inquisitively poking around inside the supply, ever know—*even after he touches one*—that those cans are "hot"?

Take no chances! Time and effort taken *now* to build a shield for these above-ground cans can save a life in the future. The shields shown were fashioned out of sheets of plexiglass drilled with ventilation holes. Such refinement is not necessary, of course. Shields can be fabricated from almost any type of metal. Hardware cloth is inexpensive, easy to handle and when corner joints are soldered it makes a fairly solid shield.

While the sixteen capacitors in the 1500-volt supply may seem like a staggering number, this amounts only to a bank of four-by-four which can occupy as little space as an eight-inch square. Actually, of course, only 12 of these have to be insulated from the chassis.

Remember, the more output capacity, the better the dynamic performance of the power supply will be. If possible, it will be best to use the 125-microfarad capacitors (Sprague TVL 1760, or equivalent). As demonstrated in the previous article, it is difficult to see how one can get too much capacity built into the power supply.

On the other hand, it is important not to overdo the inductance, since the static regulation is proportional to the total d-c resistance of the chokes.

A word about the fact that 225-milliampere smoothing chokes are here used in 250-milliampere power supplies. In a search for chokes of the lowest possible cost and d-c resistance, the design work proceeded on the assumption that the published rating meant, in effect, that this choke has 20 henries inductance at a 225-milliampere load—and might very likely carry additional current. As a test, three of these chokes were put under continuous 250-milliampere loads for 24 hours with no adverse effects. Few amateurs run their power supplies at the so-called "maximum" ratings, but those who regardless of the foregoing wish to put in chokes of higher current rating and are willing to pay the additional cost can do so. The chokes specified in the accompanying circuits were chosen with this in mind—that is, to get as high inductance and as low resistance as possible at the lowest possible cost. If other chokes than those specified are used, the resistance should be checked.

A word about the bleeder resistors used in these two power supplies. To run the resistors as cool as possible, provide a maximum of safety and save space, two methods were tried. In the smaller supply, two 100,000-ohm, 25-watt resistors were used in parallel to obtain the 50,000 ohms required. (While "Dividohms" were used because they were readily available at the time, fixed resistors will serve, of course.) This method doubles the power rating and provides a measure of safety in the event one of the resistors burns out.

Of course, the larger the resistance, the smaller the wire used in a resistor—and the more prone it is to burn out. Frankly, we prefer the second method—employed in the 1500-volt supply—of using two 50,000-ohm, 50-watt resistors in series to obtain the 100,000 ohms of resistance necessary in this power supply. This, too, doubles the power rating and provides as large wire as feasible.

A multitude of refinements can be made on a power supply, of course—one of the most worth while being a safety interlock arrangement in the final installation. However, outside of including fuses, switches and pilot lamps in the accompanying circuit diagrams, refinements have been left to the individual builder to include as suits his purpose. In deviating from the power supplies described herein, however, care should be taken to insure proper insulation at all points.

Wire with insulation suitable for the voltage involved should be used not only in the power supply unit itself, but also in making inter-unit connections to control panels and transmitters. Adequate mechanical strength should be maintained in the mounting of the heavy transformers and chokes. Input and output connectors can be of any type suitable for the voltages concerned.

The two switches included in the diagrams permit separate control of the rectifier filament power and plate power. The first time the supply is used, a filament warm-up of at least one minute is recommended before applying plate power. This will allow the mercury within the GL-816 tubes to distribute itself properly. This also applies whenever the tubes are removed and replaced. In subsequent operation, it is necessary to allow at least ten seconds for heating the filaments before applying plate power. The power supply should be operated only when the tubes are in a vertical position.

When operated within ratings, these power supplies should give the builder the most satisfactory performance ever experienced with any power supply.

One more thing: DON'T LOAD THE POWER SUPPLY WITH YOUR BODY! Be certain to short-circuit the output terminals before working on anything connected with the supply—even when it is turned to the "OFF" position and even if the a-c line cord is pulled out. Remember that 100 microfarads of capacity holds a lot of "soup" and a burned-out bleeder will allow dangerous voltages to remain in the filter for a matter of *minutes* after it is turned off!

NATIONAL CALLING AND EMERGENCY FREQUENCIES

C.W.	'PHONE
3550 kc 14,050 kc	3875 kc 14,225 kc
7100 kc 21,050 kc	7250 kc 21,400 kc
28,100 kc	29,640 kc

During periods of communications emergency these channels will be monitored for emergency traffic. At other times, these frequencies can be used as general calling frequencies to expedite general traffic movement between amateur stations. Emergency traffic has precedence. After contact has been made the frequency should be vacated immediately to accommodate other callers.

The following are the National Calling and Emergency Frequencies for Canada: c.w.—3535, 7050, 14,060; 'phone—3815, 14,160, 28,250 kc.

NATIONAL RTTY CALLING AND WORKING FREQUENCY

3620 kc

PARASITICS

In the "Designer's Corner" of the last issue of G-E HAM NEWS (Volume 9, No. 1) the formula for the resonant frequency should, of course, have read:

$$f=\frac{1}{2\pi\sqrt{LC}}.$$

control unit

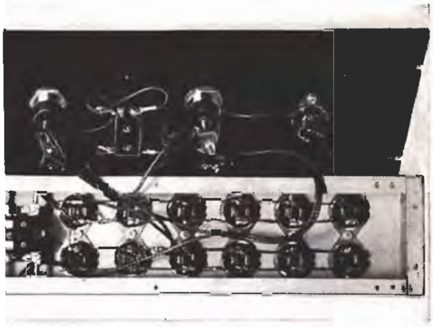

Somehow the problem of how to switch the rig and associated equipment on and off seems to sneak up on a fellow unsuspectingly. He concentrates on his transmitter, receiver, converters, VFO and the other pieces of equipment and when he gets them all working suddenly realizes he doesn't have any way to operate them without flipping a dozen or so separate switches.

Then he has to scramble around hunting in handbooks and magazines and calling up his friends to get ideas for a control unit of some sort. Of course, it's not a difficult problem, and there are endless ways of solving it.

We present this solution—found in the shack of W2GYV—as one more suggestion to add to the pile. This is a 7-inch control panel with a 4 x 17 x 3-inch chassis mounted as shown.

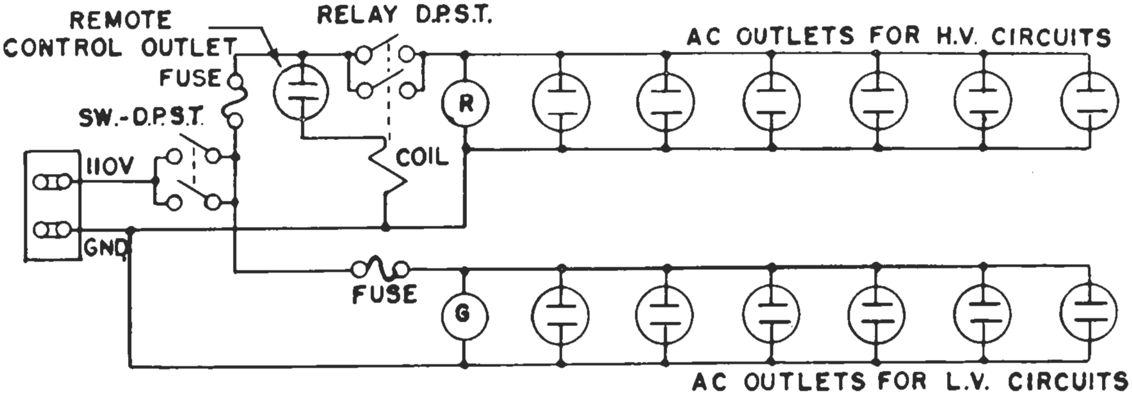

The circuit is simple and provides for remote control via the a-c type female outlet on the front of the panel. On the rear of the unit are two rows of a-c outlets—both supplying 110-volt a-c. The bottom row of six outlets is controlled by the front panel switch and is used for filament circuits in other pieces of equipment. The top row of outlets is controlled by the same switch plus the relay, and offers 110-volt a-c for the high-voltage plate transformers of various pieces of equipment.

An interesting feature of the circuit is that the relay coil is connected in the grounded side of the 110-volt a-c circuit. This method of connecting the coil eliminates any possibility of the relay being actuated if the hot lead in the remote control cable should accidentally become grounded. Incidentally, the relay used here is a double-pole type to provide a wide margin of current-carrying capacity and to halve the possibility of poor contact because of dirt or corrosion. A single-pole relay can be used.

The toggle switch shown is a heavy-duty, double-pole type to insure plenty of current-carrying capacity. The fuses used should be chosen to just carry the total current that will be drawn in their respective circuits.

The photographs show the construction clearly. Note that the mounting plates for the a-c outlets are overlapped to fit neatly in the chassis. Nothing in the construction is critical and the builder can make whatever variations are necessary to suit his purpose.

One excellent feature to add would be an interlock switch in series with the remote control outlet.

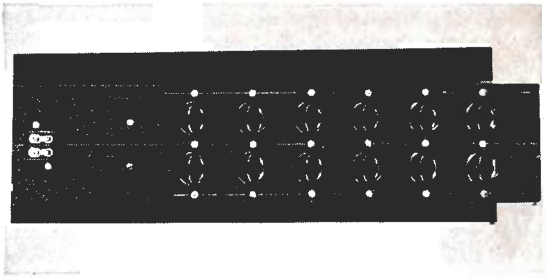

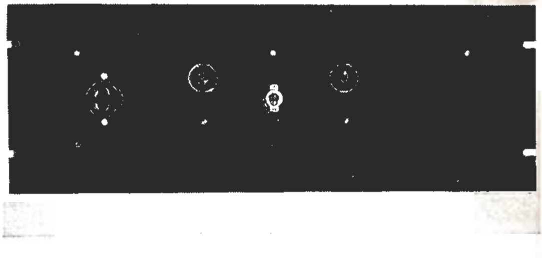

SWEEPING *the* SPECTRUM

While we were working on the power supplies described in this issue, the editor stopped by and made a few comments inspired by our ideas on doubling the bleeder resistors.

"I'll bet a lot of fellows don't realize how dangerous a bleeder resistor can be," he said. "It gives a person a false sense of security, and he forgets or at least never truly realizes that a burned-out bleeder can leave his power supply filter set up like a baited trap—ready to knock the unwary for what might very well be his last loop.

"It may sound corny and trite," he went on. "But write up that safety angle just as strong as you can. I was lucky. I learned the easy way. One time I had borrowed a power supply and in hooking it up had occasion to turn it upside-down and work on the output connection. Of course, I shut off the switch and then—purely out of habit—I shorted the output with a screwdriver. I'd developed this habit because I hadn't been using a bleeder—not because I was afraid of a burned-out bleeder.

"Well, there was an arc, a big one. I thought nothing of it for a moment. Then I saw the supply had a bleeder and it occurred to me that there shouldn't have been any arc. I checked the bleeder. Sure enough, it was open.

"Before that happened I'd considered the possibility of an open bleeder purely academic, and I'd merely given lip service to safety. But that arc was plenty real and since then—well, I'm still here.

"While you're about it, Larry, you might write in a couple more things about safety . . . about keeping one hand in your pocket when you adjust live equipment . . . standing on a dry floor . . . or better, don't adjust live equipment.

"Don't mind if some of the boys say it's old stuff. Spare a few lines of type on a plea for safety—and maybe save a life."

So, fellows, when working on these power supplies or anything connected with them, keep a sort of mental red neon sign flashing in your mind—a sign that reads: "DANGER—HIGH VOLTAGE."

* * *

Beginners often ask: "What should I start out with for a transmitter?" It's a simple question, seemingly, but after I start thinking about it I feel about as confused as the fellow who asked the question.

Perhaps the answer is that there is no general answer at all. Checking with the fellows around here shows that it all depends on circumstances what you start out with in ham radio. A few of the lads, presumably born in a gold mine, began with rather expensive commercially built rigs. At the other extreme are fellows who dismantled old broadcast receivers and built low-power rigs from the parts. Some of the boys started as Jr. OP's, cut their eyeteeth on the old man's discarded B batteries, and apparently had all the necessary parts available to begin to put things together as soon as they were big enough to lift a soldering iron. Then, of course, there's the bunch who started out with a great big zero in the way of either tools or equipment. And you know, they weren't so bad off in the end because while they were scrimping and saving to buy some tools and parts, they had plenty of time to think things all over, visit other hams and decide what they really wanted—instead of rushing out and buying, in their ignorance, a white elephant.

Most fellows seem to want a bandswitching rig. But this has two disadvantages. A compromise in performance almost always is unavoidable. Also, the chances are high that a good part of the circuitry will never be used to full advantage—thus a fair share of the investment will be wasted.

The advice of two of the lads I talked this problem over with is for the beginner to start out on just one band with a small transmitter—preferably a CW rig. They point out that this opens the way to a lot of fun and experience for not too much money. Of course, it is agreed that eventually the beginner who does this will want to try other bands and various types of modulation.

A lot of fellows end up with several small rigs—each for a separate band or mode of operation. And if they are not interested in more than 100 watts, they are very happy. Other fellows sell or swap their first small rigs and go into higher power for keeps.

Everyone I've talked to about this problem has agreed on one thing, however: It takes just as much or more time to decide what you want to do, as it does to do it. So you fellows who are worrying because you spend so much time wondering what to build can stop worrying. Your condition is normal. Take your time and plan carefully. It'll save you money in the end.

* * *

First edition of the WVARA NEWS, published by the Wabash Valley Amateur Radio Association of Terre Haute (W9QPD, secretary) has appeared. It contains news notes of members, a YL section, a feature spotlighting one of their novices (WN9AWW), and a Trading Post section. Congratulations, fellows, on the new bulletin.

—Lighthouse Larry

Technical Information 6AV5

BEAM POWER PENTODE

Amateurs looking for a power tube with high-current–low-voltage characteristics for use in low-power RF-applications may find the 6AV5 of special interest. While designed for use as a horizontal deflection amplifier in TV receivers, it should outperform the 6L6 when properly used as a buffer, multiplier or final amplifier. The tube served excellently as a clamp modulator in the 6-meter rig described in G-E HAM NEWS, Volume 7, No. 1. It is an octal base GT tube with a 6.3-volt a-c or d-c filament drawing 1.2 amperes.

BASING DIAGRAM

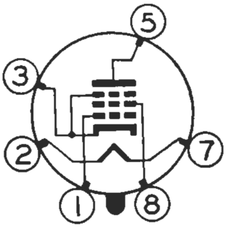

Bottom View

RATINGS AND CHARACTERISTICS

	Maximum	Average
Plate voltage	550 volts	250 volts
Screen voltage	200 volts	150 volts
Control grid voltage	−100 volts	−22.5 volts
Plate dissipation	11 watts	—
Screen dissipation	2.5 watts	—
Plate current	100 milliamperes	55 milliamperes
Screen current	—	2.1 milliamperes
Transconductance	—	5800 micromhos

Electronic TUBES

Ham News

Available FREE from
G-E Electronic Tube Distributors

Printed in U.S.A.

A Bi-monthly Publication
TUBE DEPARTMENT
GENERAL ELECTRIC
Schenectady 5, N. Y.
In Canada, Canadian General Electric Company, Ltd., Toronto, Ont.
S. E. McCALLUM, W2ZBY—EDITOR

GE Electronic TUBES

Ham News

MAY–JUNE, 1954

VOL. 9—NO. 3

PICKING THE PROPER INSULATION

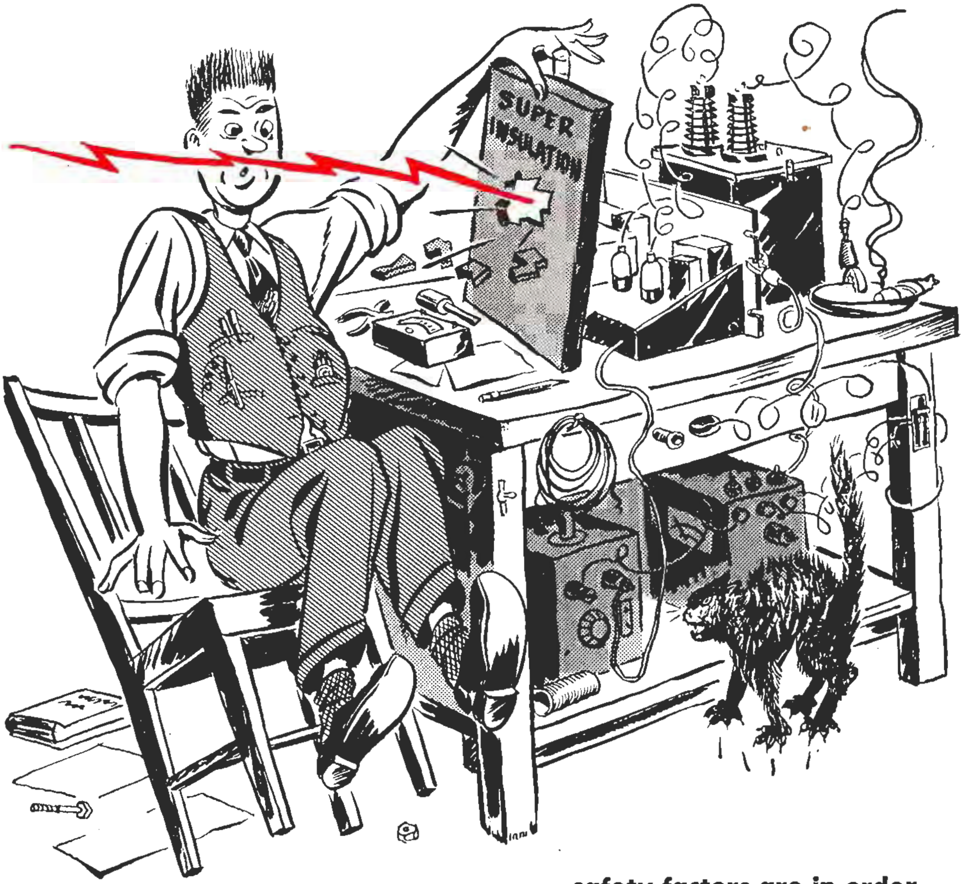

. . . safety factors are in order . . .

Contents

PICKING THE PROPER INSULATION

It is generally recognized the primary function of electrical insulation is to guide current flow through desired paths and to separate electrical circuits and conductors which operate at different voltages. Furthermore, it is evident there are gross differences in the way insulations perform. For example, coils wound on polystyrene forms have a higher "Q" than those wound on molded mud forms; and certain circuits require the use of mica capacitors while in others cheaper paper capacitors will perform satisfactorily.

What are the electrical specifications by which the performance of insulation is measured? What considerations are involved in the selection of the proper insulation for a particular job?

Some specifications (like power factor) are easily measured and known to a few percent. Others (like puncture strength) are very nebulous and must be used with a great deal of caution in any design application.

Liquid and solid materials are broadly divided into classes according to their ability to conduct electricity. To be specific, when we measure the resistance of a number of liquid and solid materials between two metal plates each 1 inch square and separated by 1 inch (see Figure 1), we find most metals and acids are relatively good conductors of electricity while mineral oil, glass, wood, rubber and plastics are relatively poor conductors. The resistance of a sample having the aforementioned dimensions is called ***resistivity*** and is measured by a special unit called ohm-inches.

Between the two extremes (*i.e.*, the conductors and

TABLE I

Insulation Specifications* (Measured at 25°C)

Material	Resistivity (ohm-in. at 30% rel. humidity or lower)	Dielectric Constant	Power Factor (%)			Puncture Strength	
			60 cy	1 mc	100 mc	d-c or peak a-c V/mil	Thickness of test sample
INORGANIC							
air	infinite	1	0	0	0	20	
mica	10^{13}	5–7	0.5	0.04	0.02	600–900	.004″
Mycalex	10^{15}	7	0.64	0.21	0.22	360	.2″
steatite	10^{14}	6	0.2	0.3	0.2	240	.250″
glass (Pyrex)	10^{14}	5	0.8	0.3	0.4	335	
barium titanate	10^{13}	1200	6.0	1.0	1.0	75 (approx)	
ORGANIC							
Teflon	10^{16}	2.1	0.02	0.02	0.02	250–1600	.012″
polyethylene	10^{16}	2.2	0.01	0.02	0.04	400	.125″
polystyrene	10^{18}	2.6	0.02	0.02	0.05	600	.125″
black Bakelite	10^{14}	5	1.0	0.5	0.5	350	.125″
Lucite Plexiglass	10^{16}	3	6.0	2.0	1.0	500	.125″
Kel-F fluorothene	10^{18}	2.5	2.0	0.9	0.5	400–2500	.125″
hard rubber	10^{15}	3	0.4	6.0	—	400	.125″
paper	—	4	1.0	4.0	6.0	200	.125″

**A large number of the values quoted here taken from the Massachusetts Institute of Technology "Tables of Dielectric Materials."*

insulators) lies an intermediate group of materials called semiconductors. We have heard a great deal lately about their use as transistors; however, they conduct electricity too well to be useful as insulation. The arbitrary boundaries in resistivity of semiconductors are generally taken to be 1 ohm-inch and 10^6 ohm-inches.

In Table I are listed a number of materials used as insulation, together with their most important electrical specifications—namely, resistivity, dielectric constant, power factor and puncture strength.

In the first column it will be noted that the resistivity values for these insulators are all a million times or more larger than the upper limit of the semiconductors. The measurement of such large resistances is not easy, but by using thin samples and 500 volts or more applied to large electrodes, values up to about 10^{16} ohm-inches can be measured accurately. The values quoted in Table I were measured at a relative humidity of 30% or lower. Moisture absorbed within or on the surfaces of high resistivity insulation can seriously lower the values measured.

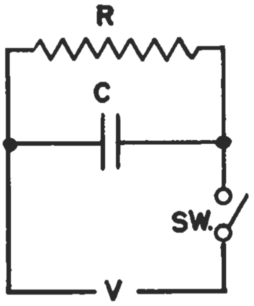

Figure 1

Consider next the currents that flow through the block of insulation shown in Figure 1 when voltage V is suddenly applied by closing the switch. If V is a d-c voltage, there is a rush of charging current which gradually decays to some steady value determined by the resistivity of the material and the applied voltage. However, when a-c voltage is applied, although most of the current leads the voltage by 90° ($I_{capacitive}$), a small but measurable current component is in phase with the voltage (I_{ohmic}). The vector diagram of Figure 2 represents these two currents.

Now the ohmic current alone produces heat. The amount of heat is determined by the d-c resistivity of the insulation in conjunction with some extra heat generated when the molecules of the insulation rub against each other as they move under the influence of the a-c voltage.

Thus the cube of insulation could be represented circuit-wise by a resistance shunted across a "perfect" capacitor—that is, a capacitor in which all the current is out of phase with the applied voltage. For "good" insulation of the type we are considering, the ratio of the heat-producing current (I_{ohmic}) to the no-heat-producing current ($I_{capacitive}$) is called the power factor of the insulation.

In other words, the power factor is the number by which the "apparent" power* of a capacitor-resistor combination must be multiplied to obtain the actual watts of heat developed. The power factor is a number (usually expressed as a percentage) which can vary from 0% for a perfect insulator such as air to 100% for a perfect conductor.

For most commonly used insulators the power factor is less than 5%, and it may be as low as .02% for the very best insulators such as polystyrene or mica.

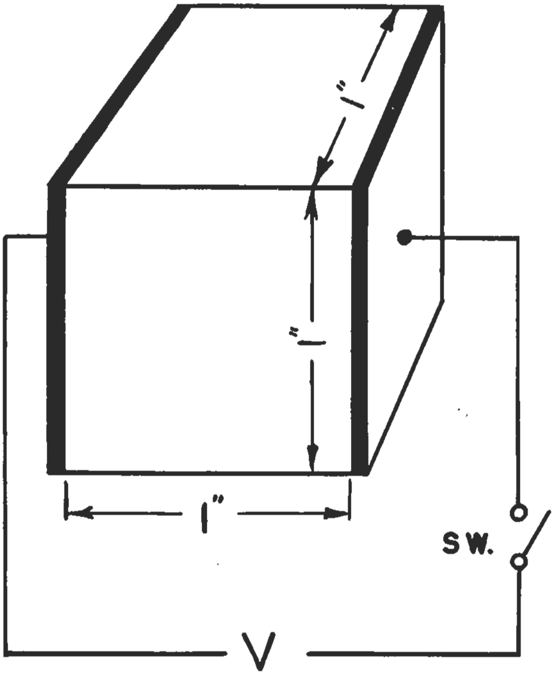

Now as indicated previously, the a-c resistivity of an insulator is in part determined by the movement of the molecules under the influence of the a-c voltage. The net result is to cause the power factor to change in a rather complicated manner with variations in the frequency of the measuring voltage. This is reflected in the power-factor columns in Table I which show it is meaningless to quote a power factor without specifying the frequency at which the measurement was made.

This variation with frequency illustrates why it is of utmost importance in many applications to choose a coil form of suitable material when working with RF circuits. For instance, a paper coil form would have a power factor of 1% at 60 cycles but 6% at 100 megacycles. And in comparing two different types of coil form material it is seen that the power factor of black Bakelite is .5% at 100 megacycles while polystyrene is .05% at the same frequency. Thus the efficiency and Q of an RF circuit can very well be quite dependent upon the type of insulation used.

---

* The "apparent power" or "volt-amperes" drawn by a circuit containing both resistance and reactance (as in Fig. 1) is obtained by multiplying the voltage across the circuit by the total current drawn without regard to their relative phases. Actually, power is consumed in the resistor only; the "power" in the capacitor being simply transferred back and forth between the source and the capacitor. Therefore, we define the power factor as the ratio of the actual power consumed by the resistor (which appears as heat) to the apparent power drawn by both resistor and capacitor.

(Continued on page 6)

EDISON RADIO

1953 Edison Radio Amateur Award

J. Stan Surber

W9NZZ

THESE IMPARTIAL JUDGES picked W9NZZ as the radio amateur who performed the most outstanding public service during 1953:

E. ROLAND HARRIMAN
President, The American Red Cross

GEORGE E. STERLING
Commissioner, Federal Communications Commission

GOODWIN L. DOSLAND
President, American Radio Relay League

GARDNER COWLES
President and Editor, "Look" Magazine

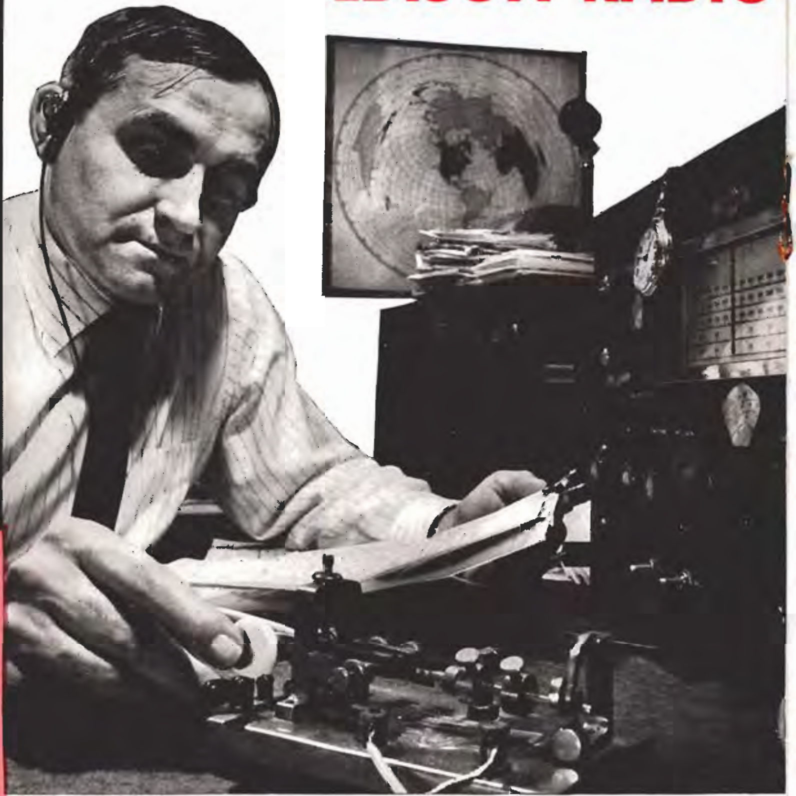

The "helping hand" operating this ivory-handled bug (hand-carved from walrus tusk) belongs to W9NZZ, winner of General Electric's 1953 Edison Radio Amateur Award. Though he never tops the monthly BPL list, he'll count words with anyone.

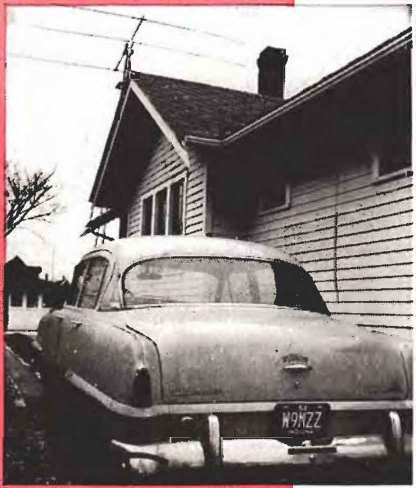

His 20-meter beam stays pointed north to squirt CW to remote weather stations near the Pole where crews are lucky to get mail more than twice a year. (Note Indiana call-letter license plate.)

News of winning the Award came via 75-fone from K4AF (MARS) via W9CMT (left) as W9NZZ was on his 4 pm-to-midnight trick as C&O RR dispatcher.

AMATEUR AWARD WINNER

Stan starts each day with early trip to post office to pick up mail for arctic weather men. In 1953 he kept regular skeds with arctic stations 353 days.

XYL Louise serves lunch at the rig so he can keep two skeds with each station most days. She won a wrist watch from G.E. as a "Most Understanding Wife." Louise works the same hours as the OM as PBX operator for C&O.

Stan loves to explain his hobby to neighbors (left) and gets many souvenirs from devoted friends he has never seen (above). Traffic piled up when Award ceremonies broke up skeds—but he reports operations now on a current basis again.

PICKING THE PROPER INSULATION

(*Cont'd from page 3*)

It is a familiar fact that the capacity of a condenser depends on the area and separation of the plates, but perhaps not nearly so well appreciated is the fact that capacity also depends on the ***kind*** of material between the plates. This has led to the use of the dimensionless quantity called the dielectric constant which usually is denoted by the letter K.

Suppose we measure the capacity of the condenser of Figure 1 first with a solid insulation between the plates and then with just air between the plates. The capacitance obtained with the solid insulation divided by the capacitance obtained with air insulation gives us the dielectric constant. In this way, the K of air is always 1. The K of the so-called "high-K" materials like barium titanate may have a value of more than 1000 (see Table I).

The principal effect of this number is to determine the capacitance per cubic inch that may be obtained in a capacitor. Thus a capacitor made with mica insulation could be made more compact than a paper-insulated capacitor of the same value since the dielectric constant of paper is 2 and mica is 7. For the same reason, a Pyranol filled capacitor is much smaller than an oil-filled capacitor of the same value.

The last of the more important electrical ratings assigned to insulation is the "puncture" or dielectric strength. This usually is expressed in volts per mil, and gives the measure of the amount of voltage necessary to puncture a piece of insulation. While the puncture strengths in Table I are quoted in volts per mil of insulation thickness, these values are not scalable over a wide range of thickness. The puncture strengths in Table I apply to measurements made with flat electrodes with carefully polished and rounded edges on insulation about ⅛ inch thick. This condition rarely is attained in practice with the result the strengths listed in Table I are all apt to be higher than would be encountered in practical situations. Thus safety factors of the order of 100% must be applied to any design based on these numbers.

Although such a listing of puncture strengths is qualitative at best, the following generalizations may be made: (a) Gases (like air) at ordinary pressures have puncture strengths about ten times lower than most solids; and (b) solid insulators ⅛ to ¼ inch thick have strengths of several hundred volts/mil except in the case of mica and very thin plastic sheets (a few mils) which may have a puncture strength as large as 1000 volts/mil.

A fact worth noting is that breakdown usually culminates in a high-temperature arc. While this is of little consequence with air and ceramic insulation, organic insulation will be charred by the arc and the carbon track created will then break down at a much lower voltage than that which caused the initial failure. This fact may be of importance when selecting an insulation for high voltage applications where arcing is expected. Often breakdowns occur in transformers where voltage taps are brought out from the windings. If the charred varnished cambric insulation is carefully cut away with a knife or razor blade, and the resulting void filled with plastic cement such as Glyptal, the transformer may sometimes be saved.

Breakdown between two conductors in certain situations may be eliminated by inserting a sheet of solid insulation between them. A piece of mica or thin sheet of plastic often will do the trick.

Sharp points on conductors cause breakdown at lower voltages than will occur with smooth-surfaced conductors under otherwise equal conditions. Thus, care should be taken to polish capacitor plate edges, keep the plates dust-free and to round-off conductors in high-voltage circuits. For example, globlets of solder will sufficiently smooth the ends of two pieces of No. 10 wire that have been cut with side cutters so that the breakdown voltage rating of the gap will be doubled.

A discussion of insulation would not be complete without mention of the effect of moisture. Moisture will lower the breakdown voltage of many kinds of insulation, especially the paper and cloth varieties. Thus, it is wise to allow ample "dry-out" time of high-voltage gear that has been stored in damp locations.

Furthermore, moisture absorbed on the surfaces of plastics will cause their power factors (and attenuation per foot) to rise. Almost every ham who has operated in wet weather with twin conductors insulated with polyethylene has noticed this effect. By actual measurement at 100 megacycles, the attenuation per hundred feet of one variety of twin lead conductors increased from 1.2 decibels to 6.5 decibels when its surface was wet. The application of water-repellent materials like silicones to these surfaces often will improve performance of insulation under adverse moisture conditions.

All the values quoted in Table I apply to measurements made at room temperature. Generally speaking, at higher temperatures the performance of insulating materials becomes poorer. As the operating temperature of a given insulation is raised, the resistivity, dielectric constant, and puncture voltage becomes lower while the power factor rises—W2UKL.

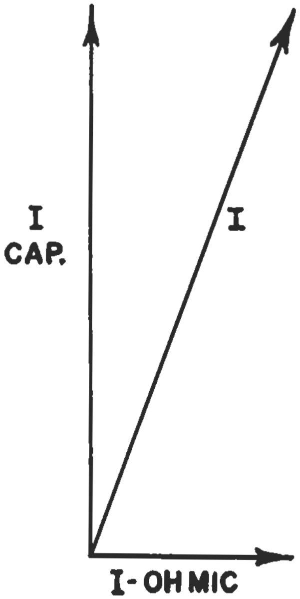

$$\text{P.F.} = \frac{\text{I OHMIC}}{\text{I CAPACITIVE}}$$

Figure 2

SWEEPING *the* SPECTRUM

Judging from the requests we've had for back copies of G-E HAM NEWS concerned with SSB, the rush to this type of emission definitely is on.

SSB fone work is so fast that there are an awful lot of long silences in these QSOs. Even the most long-winded fone men find they can run out of steam pretty fast on SSB.

One result of this situation has been the building up of super round tables—round tables of a size that would be completely impractical in push-to-talk operation. But in SSB's talk-to-talk operation anyone can stick in his two cents just by speaking up.

Did we say "anyone"? We'll correct that. All the higher-power boys in the round tables merely speak up. But the unfortunate low-power boys (5 watts peak or so) have a kind of rough time in these super round tables because everyone has his receiver turned down so the roof won't blow off when the 4-250As speak up. So even though the 6AG7 boys can work all districts without straining their filaments, they get lost in the round tables. Thus the rush is on not only to SSB, but to high-power SSB!

One thing is lacking in the SSB world as we write—honest-to-goodness traffic nets. SSB offers perhaps more to the traffic men than to other operators. So far, SSB has been the pride and joy of, first, the more technical-minded hams and now the rag-chewers. But as equipment and circuits become more standardized and we find ways to lick the stability problem, we feel SSB has a future in traffic work.

Don't think for a moment we mean that the technicians and rag-chewers are going to turn into trafficmen en masse. Not at all. The biggest single factor in traffic nets are the operators—the guys and gals with a particular kind of intense persistence and whose main objective in life is to "get that message through." They're born, not made. And we feel sure that when they latch onto SSB communications, there'll be no stopping them. Of course, a complete change-over on an entire traffic net is a problem not wholly technical—a problem of economics. (How many lads can afford to scrap an AM rig they've given, in effect, their life's blood to acquire?) The transition will be slow. But we feel that now is the time to start planning and operating SSB TFC.

Don't think that with all this talk of fone work we're slighting good, reliable CW. We ask around among our friends every once in a while about whether they prefer fone or CW—and it's about half and half as far as we can figure. Lots of fellows like to work both. Our editor himself said he's probably the worst CW man in the world—but just the same he likes it best.

So we're keeping eyes open for good CW rigs, too. One of the best 80/40-meter CW rigs we know of is the "Economy Half-Kilowatt" described in G-E HAM NEWS, Volume 3, No. 5. It's a two-control, two-stage VFO job that's a delight to operate. It uses a 1614 (but a 6L6 works fine) and a GL-4D21/4-125A. Be glad to send you one of these back copies.

⁂

In Cardiff, Wales, a case of TVI was traced to the 42-inch pendulum of a spring grandfather clock, and was remedied by grounding the metal works, according to "Sparks," the Brandon, Manitoba, club bulletin . . . the Ak-Sar-Ben Club of Omaha, reports "Ham Hum," has started an annual award (a first-class communications receiver) for the member who will be adjudged as having done the most for amateur radio during 1954 . . . the same bulletin reports 25 SSB stations in the Northeast Nebraska area where only 2 operated a year ago . . . Old-timers' hearing tapers off at 10,200 cps or so while the younger lads easily catch 15,000 cps, according to W9UIA in a talk on loudspeaker problems at a meeting of Tri-State ARA at Evansville, Ind. WN9YZO, a medico, says this is due to hardening of the inner ear with age . . .

⁂

Hams long have been known for the fine job they do in policing their own ranks. Recent comments from OO's, for example, indicate that their friendly warnings to brother hams are received in good grace and with fervent thanks in nearly every case.

Now we note comments in two widely separated local ham club bulletins which indicate some organized self-policing may be in order in a new field—among those fortunate enough to be granted auto license plates bearing their call letters.

The license plate program has met with considerable success throughout the nation—and has given us a great boost in publicity. In many cases we are thus put on a level with doctors and other public servants.

However, as we attain this stature we also have to remember that it behooves us to live up to our new standing—by added care and courtesy on the road. Need more be said than to comment that every traffic ticket a ham with call-letter license plates gets is a black eye for ham radio? And suppose through our carelessness it should be something worse than just a "ticket"? Suppose it's a broken, twisted body of a child on the highway? We see such pictures in the newspaper once in a while. And I fervently hope I never see one which includes a "murder car" bearing ham call-letter license plates.

You think this is a painful and unpleasant subject? Sure is. But not half as painful and unpleasant as the real thing. We bring it up in the hopes that a few thoughts now, beforehand, may prevent the real thing from ever happening.

—*Lighthouse Larry*

Technical Information GL-5U4-GA

A STREAMLINED RECTIFIER

The new "Service-Designed" GL-5U4-GA has slightly higher output voltage and current ratings than the old 5U4-G and a streamlined envelope and sturdier construction—all of which make it more adaptable to ham use.

Here's the difference:

	OLD 5U4-G	NEW 5U4-GA
MAXIMUM RATINGS		
Steady state peak current per plate	675 ma	900 ma
Transient peak current per plate (Maximum duration 0.2 second)	4.0 amp	4.3 amp
TYPICAL OPERATION		
With capacitor-input filter:		
AC Plate supply voltage per plate, RMS	450 volts	450 volts
Filter input capacitor	10 mfd	40 mfd
DC output current	225 ma	250 ma
With choke-input filter:		
AC Plate supply voltage per plate, RMS	550 volts	550 volts
Filter input choke	3 hy	10 hy
DC output current	225 ma	250 ma
Tube voltage drop (at 225 ma load)	50 volts	44 volts

The envelope is shorter and narrower than the old model, and thus saves space. Note the mica support at bottom as well as top—which together with the new "button stem" construction makes a sturdier tube.

Shock and vibration tests show the new 5U4-GA can withstand the hard usage of Field Day and portable operation.

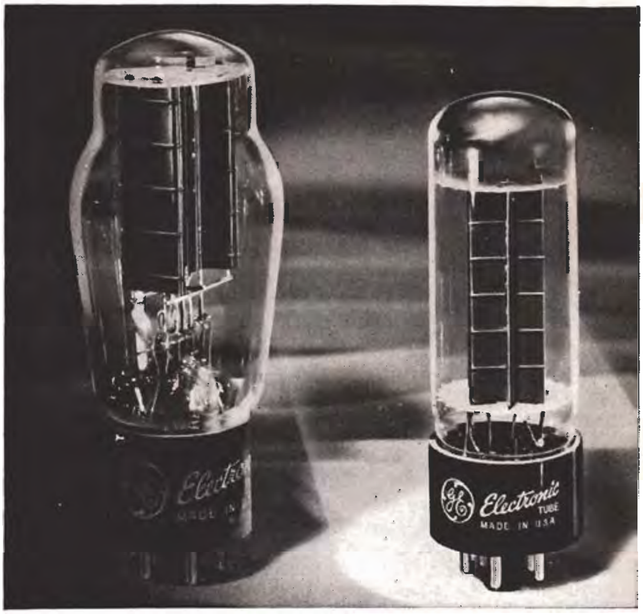

OLD 5U4-G **GL-5U4-GA**

Ham News

Available FREE from
G-E Electronic Tube Distributors

A Bi-monthly Publication
TUBE DEPARTMENT
GENERAL ELECTRIC
Schenectady 5, N. Y.
In Canada, Canadian General Electric Company, Ltd., Toronto, Ont.
S. E. McCALLUM, W2ZBY—EDITOR

Printed in U.S.A.

Electronic
TUBES

G-E HAM NEWS

Copyright 1954, by General Electric Company

TUBE DEPARTMENT
GENERAL ELECTRIC
Schenectady 5, N. Y.

JULY–AUGUST, 1954

VOL. 9–NO. 4

VTVM Adapter

• • • makes a Vacuum Tube Voltmeter out of any standard Multi-meter

CONTENTS

VTVM Adapter

A vacuum tube voltmeter is one of those instruments a ham doesn't like to pay for but sure wants badly on certain occasions. As a result, a good many hams settle for a relatively inexpensive multi-meter for all-around work and then hope for the best when it comes to measuring critical circuits.

But here's an adapter that will make a VTVM out of any multi-meter. The cost should not be high as most hams probably can find many of the necessary parts around the shack. The model shown is built in a utility box—but could just as well have been put on a bread board or an old chassis.

When used with a multi-meter, this adapter measures DC potential fairly accurately in three ranges: 0 to 4 volts, 0 to 40 volts, and 0 to 400 volts. It also measures RF voltages in the first two ranges; and gives indications of RF up to 250 megacycles.

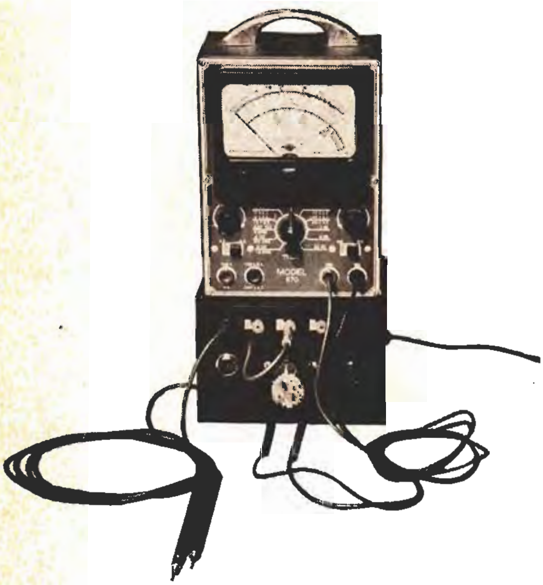

CIRCUIT DETAILS

The VTVM adapter employs a 6SN7-GTA twin triode in the manner shown in the circuit diagram. A multi-meter set on its 50-volt DC range is plugged into J_5 and J_6. Then with adapter test leads shorted the wire-wound potentiometer R_8 is adjusted to eliminate any difference of potential between the plates of the triodes. This condition is indicated when the multi-meter needle reads zero. At this condition, each plate of the 6SN7-GTA in the model illustrated is precisely 120 volts above ground.

When the adapter test leads are applied to a voltage point and ground, the bias on one half the 6SN7-GTA is upset and this half starts drawing current. This causes a difference of potential between the plates of the twin triode, and of course the multi-meter reads this difference. The high range of this adapter reads 0 to 400 volts; the middle range 0 to 40 volts, and the low range 0 to 4 volts—all reading on the 0-50 scale of the multi-meter.

In the circuit shown, little difference was apparent when using multi-meters varying in resistance from 1000 ohms per volt to 20,000 ohms per volt. Thus although the multi-meters drew some current from the plate circuit of the VTVM tube, it was not enough to seriously affect the meter reading. And of course, with the high input resistance of the VTVM, very little current is drawn from the circuit under test. It is quite conceivable that slight variations in the Adapter circuit would cause a wider variance in the operation of multi-meters of different resistance.

Three different multi-meters were tried with this VTVM Adapter and all gave the truest readings when set on their 50-volt ranges. In one case, the nearest thing to a 50-volt range was a 75-volt range. In checking against a laboratory standard power supply, it was found that this particular multi-meter used alone read a little high. This same error was reflected in the readings when the VTVM Adapter was used and the multi-meter set on its 75-volt range.

This multi-meter also has a 150-volt range, a 15-volt range and a 7.5-volt range. However, when set on the 15- and 7.5-volt ranges and connected to the VTVM Adapter the errors at low voltages rendered readings almost useless due to the low value of resistance shunted across the 6SN7-GTA plates. This multi-meter has a resistance of 1000 ohms per volt. With the multi-meter set on its 150-volt range, readings were usable, but more in error than when the 75-volt range was used because of the difficulty in reading the low end of the scale.

When balanced, 120 volts is on each plate of the 6SN7-GTA in the model illustrated. Tests showed that when 1 volt is applied to the Adapter input (with the Adapter range cord plugged into the 0 to 4-volt range tip-jack), the potential on one plate of the 6SN7-GTA drops to 110 volts while the other plate remains substantially at 120. This indicates a 10-volt gain in the Adapter. When 300 volts is applied to the Adapter input (with the Adapter tip-plug in the 0 to 400-volt tip-jack), the one plate of the 6SN7-GTA drops to 90 volts while the other plate remains at substantially 120 volts. This, also, indicates a 10-volt gain in the Adapter.

In this manner, voltages up to 4, 40, and 400 were measured fairly accurately, but above this point the 6SN7-GTA became saturated and further increases in voltage made little difference on the scale of the multi-meter. (This actually is a safety feature. For because of this limiting action, overloads of many times the full-scale value will not harm the meter. This of course does not mean ordinary care should not be used, as other parts may be damaged even though the meter movement itself is not harmed.)

Thus it was found that the useable difference of potential between the plates of the 6SN7-GTA ranged between 0 and 40 volts. The simplest calibration procedure is to check the performance of an Adapter-multi-meter combination against a good standard VTVM and select the multi-meter range which gives the truest readings. Then stick to using that particular range. As mentioned above, this was found to be the 50-volt range or thereabouts in the multi-meters tested.

RF PROBE OPERATION

The RF probe measures voltages fairly accurately in alternating-current circuits operating at radio frequencies up to 10 megacycles. In a test with a standard

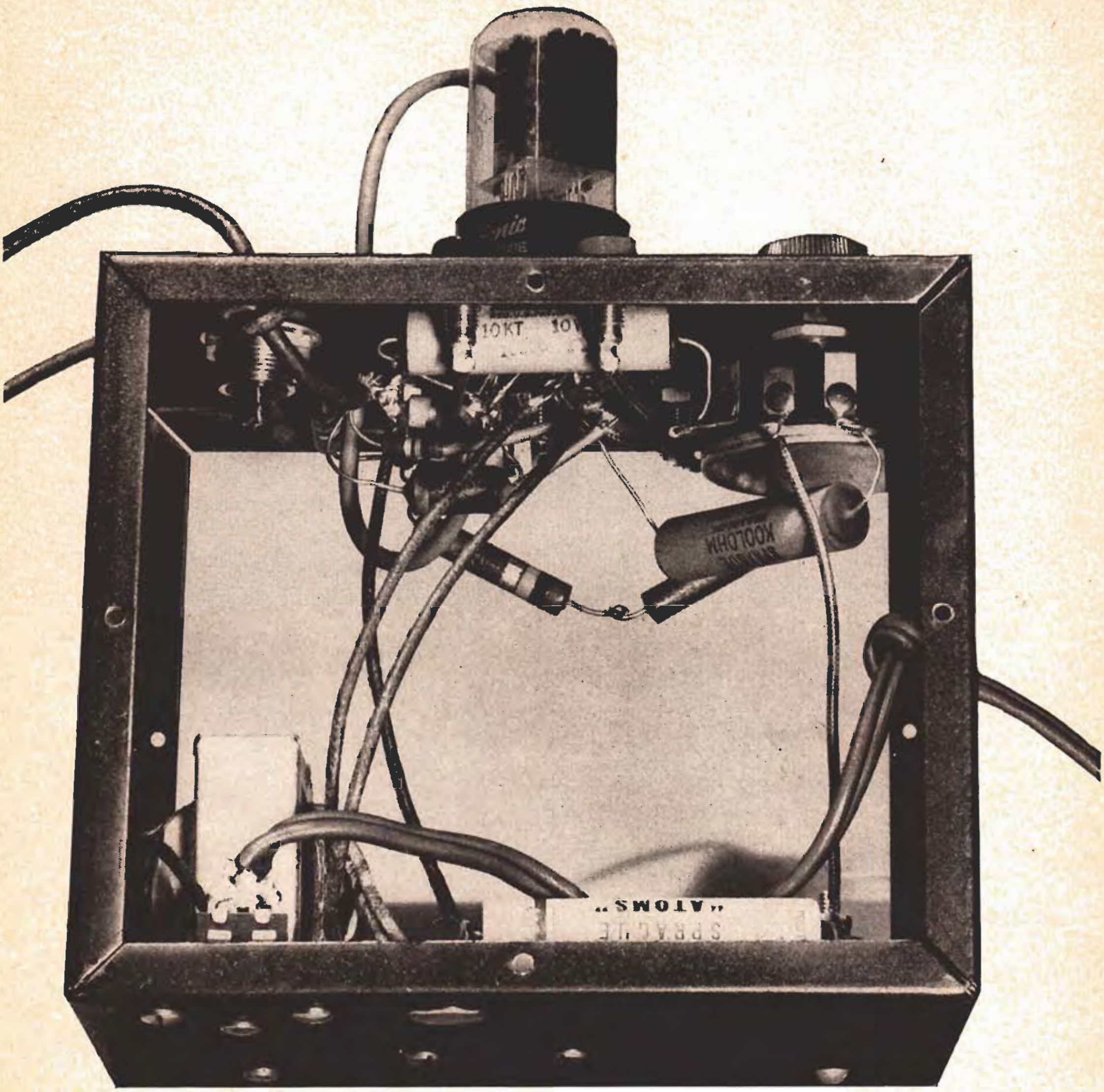

signal generator, an RF voltage of 4 volts read 3.8 volts with the Adapter-multi-meter combination. Above 10 megacycles the sensitivity fell off and the Adapter no longer gave an accurate reading. However, the presence of RF on the coil of a grid dip oscillator was still indicated by the Adapter up to 250 megacycles.

Thus outside of its useful range in measuring voltage, the RF probe serves well in the role of signal tracer.

Of course, care must be taken not to exceed the voltage rating of the germanium diode. The type 1N48 used in this probe is rated at 85 volts peak inverse and 400 milliamperes maximum surge current for one second. Average shunt capacity is 0.8 micro-microfarad. Although other types of crystal diodes can be used, it is best to choose one with as high a peak inverse voltage rating as possible.

CONSTRUCTION DETAILS

A 4x5x6-inch utility box provides more than enough room for the essential "works"—and, in addition, leaves space for incorporating a meter into the unit if desired. The tube was mounted outside the box to eliminate the necessity for a special tube socket bracket, to keep the heat outside the box, and to act as a pilot light. A builder anticipating rough usage could, of course, place the tube inside.

Red and black tip-jacks are used for the positive and negative multi-meter leads. The 0 to 4, 0 to 40 and 0 to 400 range tip-jacks are labeled accordingly. The flexible cord with the tip-plug which changes the range could be replaced by a switch.

The chassis connector for the RF probe is merely connected in parallel with the low-range input tip-

Circuit diagram of VTVM Adapter and

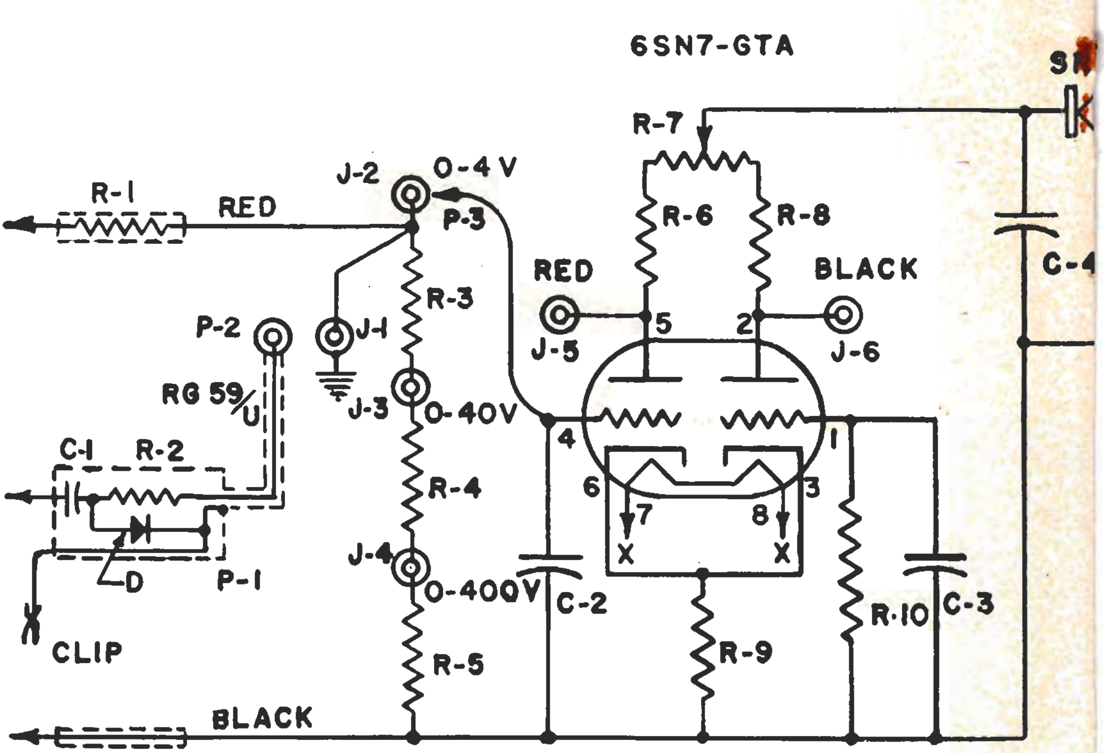

(Resistors ½-watt unless otherwise indicated)

R_1—1 megohm

R_2—3.3 megohms

R_3—9.1 megohms

R_4—.91 megohm

R_5—.1 megohm

R_6, R_8—10,000-ohm, 10 watt

R_7—5000-ohm wire-wound potentiometer

R_9—600-ohm, 1-watt

R_{10}—10 megohms

R_{11}—100-ohm, 5-watt

C_1—500 mmf. disc ceramic

C_2, C_3—.01 to .05 mfd.

C_4—10 to 20 mfd. elect

D—Type 1N48 crystal

SR—selenium rectifier (

T—Pri: 117 v., 60 cy;
(Stancor PS8415 or

P_1—Phone plug (see te

P_2—Single contact micr

P_3—pin plug

J_1—Single-contact micr

J_{2-6}—tip jack

RF probe.

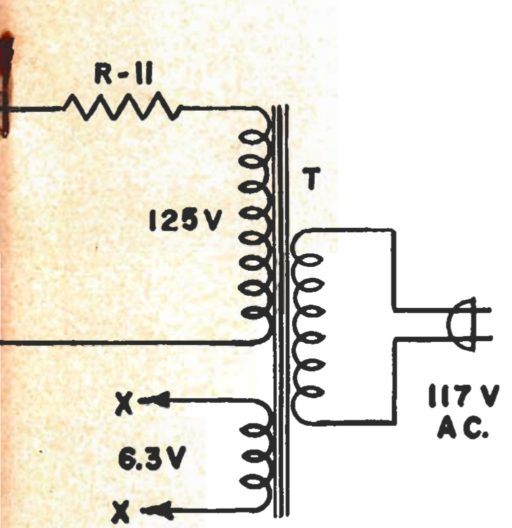

rolytic

iode (see text)

see text)

sec: 125 v. @ 15 ma. and 6.3 v. @ .6 A

equivalent)

xt)

phone cable connector

phone chassis receptacle

jack—this separate connector being provided to accommodate the coaxial cable and to permit the RF probe to be detached when not in use. If the DC test leads are wired into the circuit, as in the model illustrated, care should be taken not to allow the positive lead to touch a high-voltage spot when the RF probe is in use.

The RF probe is easily constructed with a 4-foot length of RG-59/U and a phone plug. A plug with solder lugs instead of the machine screw type designed for phone tips was chosen because it provides more room for the resistor, diode and capacitor as well as convenient solder tie points for these components. The construction is clearly shown in the illustration. In this model, the plug tip was removed and the center conductor shaft drilled and tapped to receive a machine screw. The screw then was "beheaded" and filed to a point. With some types of plugs it may be possible to merely reshape the tip to serve as the test lead point. The ground clip lead is soldered on the base of the plug as shown in the illustrations.

Practically any selenium rectifier designed to operate in a 120-volt half-wave rectifier circuit can be used as current drain is very small. A separate power supply can be used, of course, by those who may have a utility supply at hand and wish to avoid the expense of building one to incorporate in this instrument. However, if an external supply is used, care must be taken to make sure the supply voltage is precisely the same every time the meter is used. For variations in the supply voltage may upset the calibration.

USING THE VTVM

A sample of voltage tests made on a grid dip oscillator illustrate the usefulness of a VTVM. The GDO was adjusted so its meter read 1 milliampere. Then the plate voltage was read with first the multi-meter alone, then with an Adapter-multi-meter combination, and finally with a fairly expensive commercially-built VTVM which had been checked against laboratory standards. In each case the effect of the measurement on the GDO current meter was observed.

The multi-meter alone read 46 volts and the GDO current dropped during the test from 1.0 milliampere to .5 milliampere. The Adapter reading was 56 volts and the GDO meter needle dropped only a hair's breadth during the test. The commercially-built VTVM read 55 volts, and again caused only the tiniest flicker on the GDO meter.

The average commercially-built VTVM is granted an error of ±5%—which means in the instance cited above that the 55 volts read with the standard VTVM actually could have been anywhere between 52.2 and 57.8 volts (had the meter not been first checked against a laboratory standard). The Adapter reading came within this range; but the multi-meter reading dropped far below this minimum tolerance. In fact, the 46-volt reading obtained with the multi-meter alone is an error of more than 16%.

The operating manual for the GDO under test* specifies a plate voltage of 40 to 60 volts. So in this case the use of a multi-meter would not have led an experimenter too far astray. However, it is quite conceivable that a minimum of 50 volts might have been specified. Had this been the case, the multi-meter alone would have indicated insufficient voltage, whereas in fact the voltage was well over the 50-volt limit.

The uses to which a VTVM can be put are well illustrated in the ARRL "Course in Radio Fundamentals" and in many standard electronics texts. In addition, the instruction manuals on instruments such as grid dip oscillators often describe how the usefulness of such instruments can be extended when used in conjunction with a VTVM.

---

* Heathkit

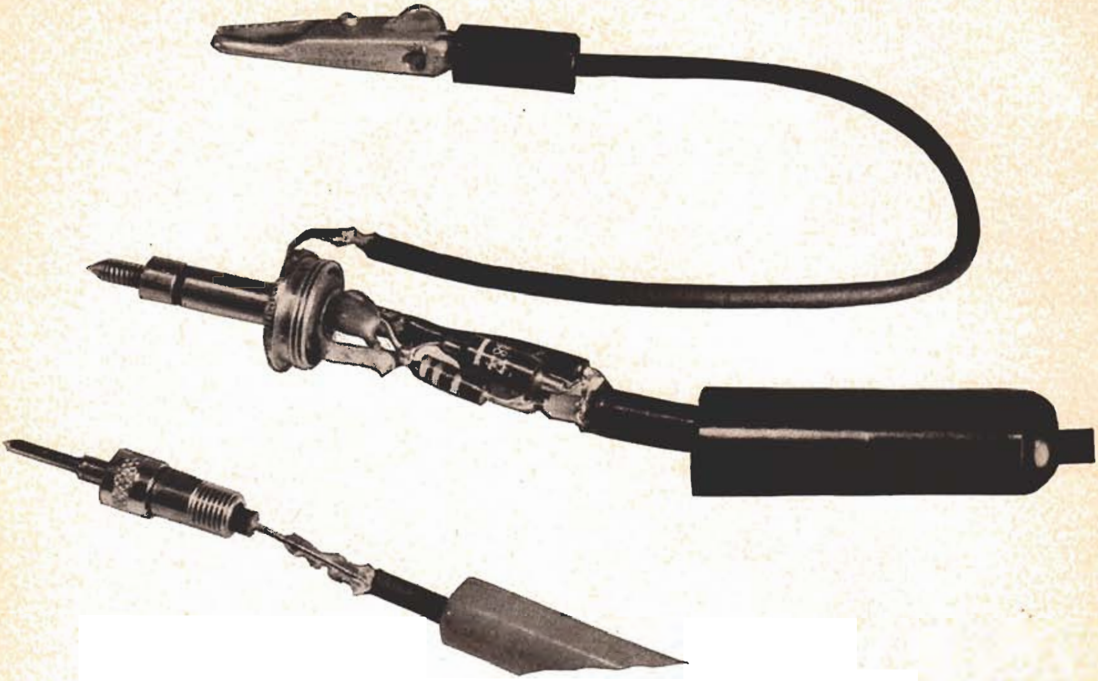

For instance, the Q of a tuned circuit may be measured by using a GDO and VTVM. Using the RF probe, the VTVM is connected across the tuned circuit. The GDO is loosely coupled to the circuit and output frequency adjusted until a maximum reading is obtained on the VTVM. This frequency (f_1) can be noted by checking against a calibrated receiver. The GDO frequency then should be increased until the VTVM reading drops to 70.7% of its original value. Once again the frequency (f_2) should be noted by checking against the receiver. Then the GDO frequency should be set *below* f_1 at a point where once again the VTVM reads 70.7% of the peak value and this third frequency (f_3) noted on the receiver. Then:

$$Q = \frac{f_1}{f_2 - f_3}.$$

The balanced DC amplifier type circuit used in this Adapter is the type most often employed in commercially-built VTVM's. The 1-megohm resistor in the positive DC test lead is incorporated in the probe to minimize the capacity effect of the long test lead and thus allows the instrument to be used to make dynamic voltage measurements in circuits carrying oscillator or signal voltages.

Similarly, the crystal diode and associated rectifying components are built into the plug which forms the separate RF probe to provide low capacity to ground.

It is possible with a VTVM to measure AVC voltages in receivers quite accurately—a measurement not possible with conventional voltmeters because their comparatively low internal resistance will shunt out a high resistance AVC circuit. This AVC check, incidentally, makes a convenient point for obtaining an output reading when lining up the RF and IF stages of a receiver.

The operation of an oscillator can be checked over its intended frequency range by measuring the value of grid voltage at the oscillator tube socket while tuning the circuit over its range.

Since the high impedance of the VTVM allows it to be placed directly on the grid of a tube without seriously disturbing the circuit, it is possible to tell whether or not a tube is gassy. A gassy tube will cause a positive voltage to appear across the grid resistor instead of the usual negative voltage. This same condition can exist, however, due to a leaky coupling capacitor—so it is wise not to discard a tube without first also checking the capacitor for leakage.

Because the loading effect of the VTVM is negligible, it is possible to measure current without opening a circuit to insert a milliammeter. The only requirement is the presence of a resistor of known value in the circuit. In this case it is merely necessary to measure the voltage at each end of the resistor, subtract to find the voltage drop, and then apply Ohm's law to determine the current. In designing equipment, it is often quite feasible to insert 100-ohm resistors at certain points especially for this purpose.

HOW TO GET G-E HAM NEWS

G-E HAM NEWS may be obtained free from G-E tube distributors—or for $1 per year G.E. will mail HAM NEWS to your home. Write to: G-E HAM NEWS, Tube Department, General Electric Co., Schenectady 5, N. Y. This subscription plan is available to amateurs only in the United States, Alaska, Hawaii and the Panama Canal Zone. Amateurs in Canada should address requests to Canadian General Electric Co. Ltd., Electronic Tube Marketing Section, 830 Lansdowne Ave., Toronto, Ontario, Canada. In all other countries G-E HAM NEWS may be obtained through International General Electric distributors.

SWEEPING *the* SPECTRUM

Another important insulation—which we neglected to mention in our article on the subject last time—is silicone rubber. This material has excellent properties, as well as outstanding resistance to ozone, corona, sunlight and heat.

For those who might wish to add this insulation to the table of statistics given in the May-June, 1954, issue of G-E HAM NEWS (Vol. 9, No. 3), here are the ratings: Resistivity (ohm-inches), 10^{14} to 10^{16}; dielectric constant, 3.0 to 3.5; power factor, 0.3 at 60 cy, 0.2 at 1 mc; puncture strength of a 0.080-inch sample, 400 to 500 volts per mil. Silicone rubber is partly organic and partly inorganic so fits neither of the two general classifications in the table accompanying our previous article.

While the electrical properties of silicone rubber are of the same order of magnitude as organic materials at room temperature, they are greatly superior at high temperatures where "pure" organic materials can no longer be used. Silicone rubber is, of course, but one of a large family of materials.

* * *

The silicones, incidentally, are something like the schmoo of comic strip fame. We mean nothing derogatory in saying that. As you will recall, the schmoos could do anything. And it's much the same with the silicones. In fact, every article we've ever read on the silicones has left us groggy and bewildered. For as the story unfolds, we begin to forget the silicone uses that were recited in the beginning.

Let's put it this way. Silicones are a new class of man-made chemicals, combining the best qualities of sand, coal and oil. Their key material is silicon, which is derived from sand—the second most abundant element on earth. As a wartime development, the silicones were under wraps for quite a while after the initial research at the General Electric Research Laboratory in the 1930's.

In its commonest form—a water-white oil—the amazing chemical can be poured in subzero cold and yet survive heat up to 600 degrees F. As a "defoamer," only a drop or two will burst millions of bubbles. As a release agent, silicones keep rubber and plastic objects from sticking in molds. In paint, silicones can shrug off intermittent blasts of heat up to 1200 degrees F for 72 consecutive hours.

The various silicones are combinations of oxygen and one or more hydrocarbon with silicon. By varying the proportions and types of hydrocarbons, the chemist can produce silicones ranging in stability and flexibility from volatile liquids to stable solids. They are used as spreading agents in waxes and polishes, as water-repellents on insulation and textiles, as grease insulation on spark-plug terminals, and in many places where a non-corrosive seal is needed.

Scientists see in the future silicones replacing damaged vital parts of human tissue, silicone tires that will last the life of the car, silicone bunion pads and hygienic baby pants, stain- and spot-resistant clothes and—well, it does get bewildering. Think we'll try spraying a drop or two into the atmosphere to see if it will dispel the QRM.

* * *

A dozen 10-meter mobiles from these parts went out to a nearby reservoir one recent week end and provided communications for a "carp-shooting contest." The shooting was done by bow and arrow and scoring kept up-to-the-minute by five mobile stations reporting in to a HQ station. Ham radio came in for quite a bit of praise and a trophy was awarded the hams for their work. The boys' big question now is what are they going to do with the trophy? Who's going to keep it? They don't all belong to one club. They can pass it around for a while. Then what? Any suggestions?

* * *

To succeed in amateur operating a fellow has to develop a fairly high degree of patience, as old timers know very well. A recent example of this was brought to our attention when a ham we know attempted to contact a friend of a visitor in his shack. No sked had been arranged but the ham knew the other fellow often was on the air near a certain frequency around 8 o'clock at night. While the visitor sat and waited without much hope of making the contact, our friend alternately combed the specified frequencies, called a few times and alerted several other hams working nearby. Pretty soon they heard someone testing—and there was the contact. The visitor was much impressed—but our friend thought nothing of it.

Another example of ham patience is reported in a recent issue of the Rochester (N. Y.) Amateur Radio Association Rag. W2SAW followed the Clipperton Island expedition for days and then started to call them at 6:30 one morning. He called constantly until the following morning at 2:45 when he made the contact.

* * *

Our editor thinks he may have received one of the last QSL cards from Nicaragua—at least for a time. He got a card from a YN1—who he worked on 75-meter SSB with a 10A and 6146—together with a letter which said the YN1's were off the air due to "some internal difficulty." A week or so later the news broke about arms shipments from Czechoslovakia to neighboring Guatemala—which our editor thinks probably had something to do with the "internal difficulty."

—*Lighthouse Larry*

Technical Information

SLICING UP ELECTRONIC TUBES

What spacing exists between the components of a tube after it is put together? Breaking sample tubes open and and looking at them is unsatisfactory because the disassembly process could disturb the placement of the elements.

G.E. solves this inspection problem by filling samples from the production line with plastic—and then slicing the tubes cross-wise and/or length-wise to check the spacing of elements.

In some cases, the tube is immersed in a clear liquid plastic, and the glass tip broken off. Because of the vacuum inside the tube, normal atmospheric pressure forces the liquid plastic into the tube. In other instances, a hole is drilled in the tube (see hole in cap of the 2C39-A illustrated) and tube evacuated again in a special vessel which also contains the plastic liquid.

Chemical action and baking harden the plastic in a few hours with the elements undisturbed. Then the glass envelope can be cracked away, and the plastic-encased elements sliced into sections and polished for study under a microscope.

Careful inspection of the illustration will reveal the filament, grid and even the solder in one pin—just as they actually ended up in a finished tube.

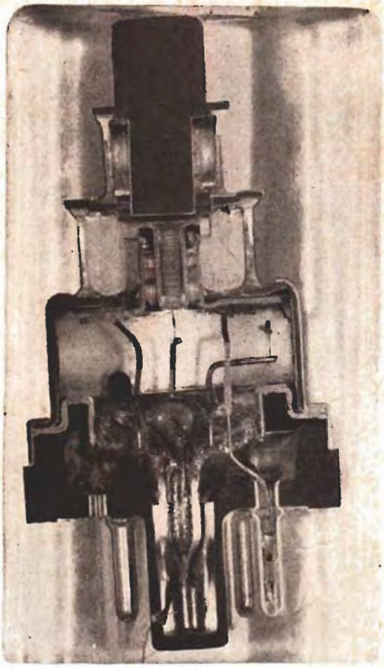

Electronic TUBES

G-E HAM NEWS

Available FREE from

G-E Electronic Tube Distributors

published bi-monthly by

TUBE DEPARTMENT

GENERAL ELECTRIC

Schenectady 5, N. Y.

In Canada
Canadian General Electric Co., Ltd.
Toronto, Ontario

S. E. McCALLUM, W2ZBY—EDITOR

Printed in U.S.A.

VOL. 9 - NO. 4 JULY - AUGUST, 1954

Electronic
TUBES

TUBE DEPARTMENT
GENERAL ELECTRIC
Schenectady 5, N. Y.

G-E HAM NEWS

SEPTEMBER–OCTOBER, 1954

VOL. 9–NO. 5

Low-Noise 220-Megacycle Converter

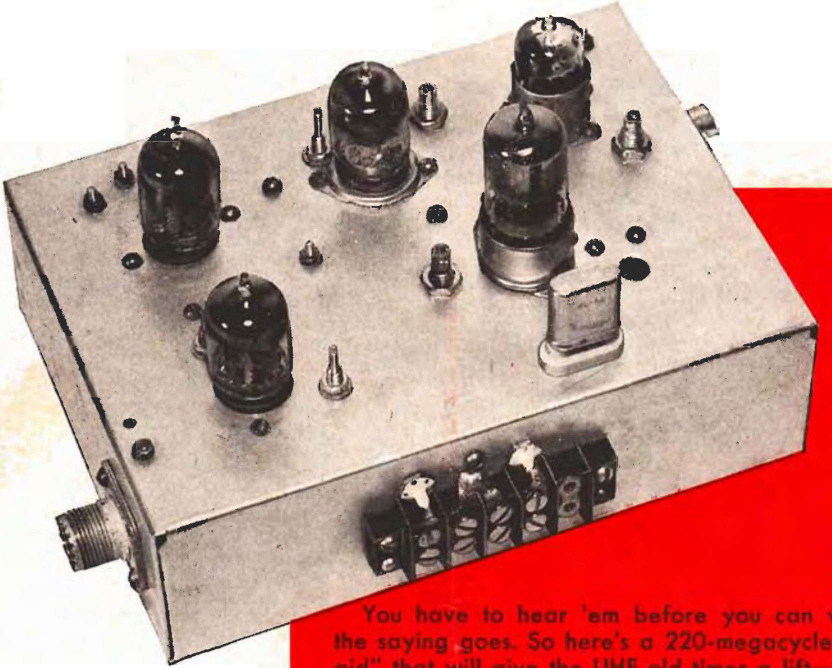

You have to hear 'em before you can work 'em, the saying goes. So here's a 220-megacycle "hearing aid" that will give the UHF old-timer a lift—and give the UHF tyro a good start. It's a 220–225-megacycle crystal-controlled converter that feeds a 10–15-megacycle signal into a communications receiver. Take a look, fellows.

—*Lighthouse Larry*

CONTENTS

220-MEGACYCLE CONVERTER

CIRCUIT DESCRIPTION

This 220-megacycle converter uses 6AJ4 and 6AM4 type tubes developed by General Electric especially for high-frequency service. As shown on the circuit diagram, two stages of radio frequency amplification are used. These are 6AJ4's in grounded grid service rather than in cascode circuits because of the relative ease in getting the circuits into operation. Performance does not seem to be impaired, because the noise figure was found to be between 5 and 6 db. In addition, the circuit is not critical to adjust.

A 12AT7 is used as a fixed oscillator, the first stage operating at 70 megacycles with an overtone crystal in a Butler-type circuit. The second half of the 12AT7 triples to 210 megacycles, and this frequency is injected into the 6AM4 mixer by means of a 1 micro-microfarad coupling capacitor. The resultant intermediate frequency varies from 10 to 15 megacycles, depending upon the frequency of the signal being received. The 220- to 225-megacycle amateur band thus is covered by tuning the station receiver between 10 and 15 megacycles.

Two Butler-type circuits were built, both using a 70-megacycle overtone crystal, and each oscillated satisfactorily. If a lower oscillator crystal frequency is to be used, it will be necessary to rearrange the circuit and add another multiplying stage. In this event, a 7.77-megacycle crystal could be used in a stage which picks off its third overtone of approximately 23 megacycles—and then multiplication continued to 210 megacycles as in the circuit described here. The oscillator circuits were set up initially with a grid-dip oscillator and required some later adjustment in tuning and coupling to optimize performance. The variable capacitors specified allow plenty of tolerance for circuit variations.

The 6AM4 mixer stage is a grounded cathode circuit. This tube has five grid pins, and no trouble was encountered in using two of these pins. The three unused grid connections were removed from the socket to minimize stray capacitance. A single-stage IF amplifier uses slug-tuned coils and a 6AK5.

The converter requires from 125 to 150 volts of B plus rated at 50 to 60 milliamperes and a 6.3-volt filament source that will handle 1.2 amperes. Both the filament and high-voltage leads are by-passed at the terminal block by feed-through capacitors (C_{25} and C_{26}) to prevent possible interference from a strong shortwave station at the IF frequency which might enter the converter through the power connections. If such a station is nearby, it may be necessary to cover the 6AM4 and 6AK5 and use a bottom plate on the chassis. Such precautions prevent frayed nerves when trying to copy 220 DX.

NOISE PERFORMANCE

As always at these frequencies, noise is an important factor and considerable success was experienced in reducing this figure.

In the VHF and UHF range the ultimate sensitivity of a receiver or converter is limited by its noise figure. It is important to reduce noise figure as low as possible. If the noise figure is reduced from 15 db (a not uncommon figure) to 5 db, it has the same effect as raising by 10 times the power output of the station sending to the receiver. The 6AJ4 and 6AM4 tubes were designed to provide top performance at the UHF television range, and they perform beautifully at 220 megacycles.

A noise generator should be used to optimize performance. Such circuits have been described numerous times in amateur publications, and the circuit of the one used to set up this converter is shown in Figure 1.

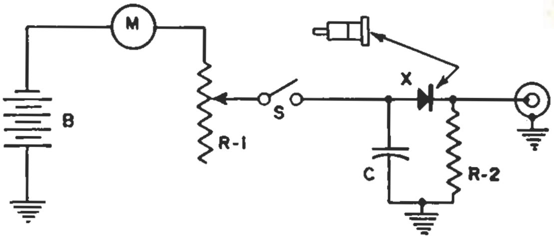

Fig. 1—Home-built noise generator uses a 0 to 2 ma meter

C—.001 mfd ceramic disc or tubular
R_1—10,000-ohm potentiometer
R_2—56 ohms, ½ watt
X—silicon diode (1N22 or 1N23)
M—0-1 or 0-2 ma d-c meter
B—3 volts

A silicon crystal diode must be used and the one shown here is a surplus 1N23 held into the circuit with a fuse clip and a pin taken from an octal socket. The time spent in constructing such a noise generator will be more than made up in optimizing performance of the converter.

The general procedure used for this converter was to first set it up for maximum gain (as measured at the detector of the station receiver) with a signal generator that will put out a 220-megacycle signal. After this was done the noise figure of the converter was measured on a laboratory-type noise generator and found to be 9 db. Then the home-built noise generator was connected to the receiver, and adjustments made as described below until optimum noise performance was obtained.

When finally checked against a laboratory-type noise generator, the noise figure was between 5 and 6 db—fairly respectable performance at 220 megacycles. It should be noted that optimum noise figure is not necessarily obtained at the point of optimum gain. Thus, in the absence of laboratory-type noise generators which can actually measure the noise figure, it is important to adjust for minimum noise figure on the home-built noise generator rather than for maximum gain.

PRELIMINARY CONSTRUCTION

Construction is not difficult, but should closely follow the layout and wiring of the model illustrated. The converter contains a total of 55 parts to be wired in—that is, capacitors, resistors and coils. This averages only about nine parts for each of the six stages—and only five of the connections are particularly critical. The accompanying illustrations have been carefully made with a view to assisting the reader in following the construction as closely as possible.

A 5x7x2-inch aluminum chassis should be laid out according to Figure 4—although slight variations are permissible to accommodate the actual parts the builder has gathered. It is wise to have on hand all the necessary parts—including the coils—before starting construction. Care should be taken to drill tube socket-mounting screw holes so that sockets will be properly oriented.

After the chassis is drilled and punched, the following parts can be mounted: RF connectors, terminal block and its feed-through capacitors, crystal socket, IF coil forms, the 4-30 micro-microfarad ceramic trimmer, the tubular ceramic trimmers, the variable air capacitor, and the four tie-points which support the RF chokes and the 100-ohm decoupling resistors. Miniature ceramic stand-off insulators made by Cambridge Thermionic Corporation are used for this latter purpose in the model shown, but ordinary 1- or 2-point terminal strips will serve.

Before mounting the tube sockets, some of the unused lugs of the tube sockets of the first RF stage and the mixer stage are removed to reduce stray capacity. In the first 6AJ4 stage, tube socket lugs 1 and 3 should be removed; and in the 6AM4 stage tube socket lugs 3 and 6 should be removed. This operation is easily accomplished by flattening the locking dents in the lugs with a pair of long nose pliers and then pushing them out through the top of the socket.

When mounting the tubular ceramic trimmers (C_1, C_3, C_7 and C_{10}), note they should be oriented so their lugs can be soldered directly to the tube socket lugs.

Small strips of copper about 3/16-inch wide are fashioned for soldering between pins 4 and 9 of the first 6AJ4 socket, and between pins 1, 3-4, 6 and 9 of the second 6AJ4 socket. As shown in Figure 5, these shields are connected to the base sleeve of the socket.

COIL WINDING DATA

While coil specifications in the components list accompanying the schematic diagram are complete, it might be well to mention that L_6 and L_7 can be wound on any type form as long as the finished product, in the circuit, tunes the IF frequencies of 10 to 15 megacycles.

After winding RFC_{1-4} and L_3 on the threads of a ¼-20 bolt, it is possible to carefully unscrew the bolt from the coils without disturbing the spacing. It is wise to leave the leads longer than necessary until ready to wire the coils into the circuit.

WIRING DETAILS

The filament leads, RF chokes and high-voltage leads can be wired first. Wiring of the remaining components should follow—with the exception of C_5, C_9, and C_{22} and the input lead from the RF connector to the cathode of the first 6AJ4. Care should be taken to keep RF leads as short as possible.

In wiring, note the placement of C_{11} and C_{12} on each side of pin 2 of the 6AM4 socket. Two capacitors are used here to reduce lead inductance. In the model shown (Fig. 5) two 200-ohm resistors are used for R_8—one connected to pin 2, the other to pin 7 (both cathode pins) of the 6AK5. One 100-ohm resistor connected to either pin will serve, however.

Connection of C_5, C_9 and C_{22} and the RF input lead to their associated coils is somewhat critical for optimum noise figure and the adjustment procedure is described below.

ADJUSTMENT PROCEDURE

The home-built crystal diode noise generator does not give noise figure in actual db. It is a comparison device only, and merely tells the experimenter whether the adjustments he makes on his converter are in the right direction. With the particular crystal and components used in the home-built noise generator shown, it was found that 1 milliampere of reverse crystal current—indicated on the noise generator meter—is equal to approximately 10 db of noise when compared with a laboratory noise generator.

Unless the builder has access to such a laboratory instrument, he will not be able to measure precisely the noise figure of his converter. However, if the construction and adjustment instructions are closely followed, he can be sure that when he has attained optimum performance as indicated with his own home-built noise generator, the noise figure of his converter will be comparable to the converter described herein.

The adjustment procedure for obtaining the best noise figure involves moving the connections of the RF input lead, C_5, C_9 and C_{22}. Of course, before these adjustments can be made, these components must be soldered in to check voltages and set the converter up for maximum gain. It is suggested that as a starting point, the RF input lead from the antenna connector be soldered directly to the cathode pin of the socket of the first 6AJ4. The connection of C_5 to L_2 can be made at the center of L_2. Then C_9 can be soldered from a point about a half-turn down from the plate end of L_2 directly to pin 9 of the 6AM4. C_{22} can be connected between grid pin 4 of the mixer tube and tapped down about a half turn from the plate end of L_{10}.

With these connections made, the first step is to use a signal generator as mentioned above—or a fellow ham's 220 mc transmitter—and make the usual adjustments of the tuned circuits to get maximum gain. Once this is accomplished, the objective of subsequent ad-

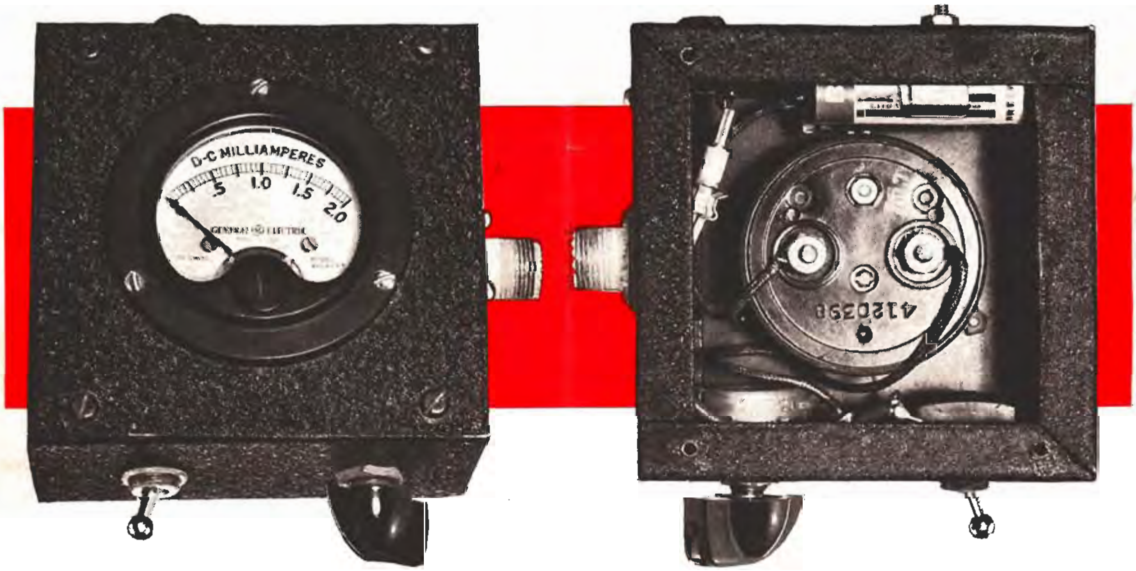

Fig. 2—Two penlite cells supply power for the noise generator

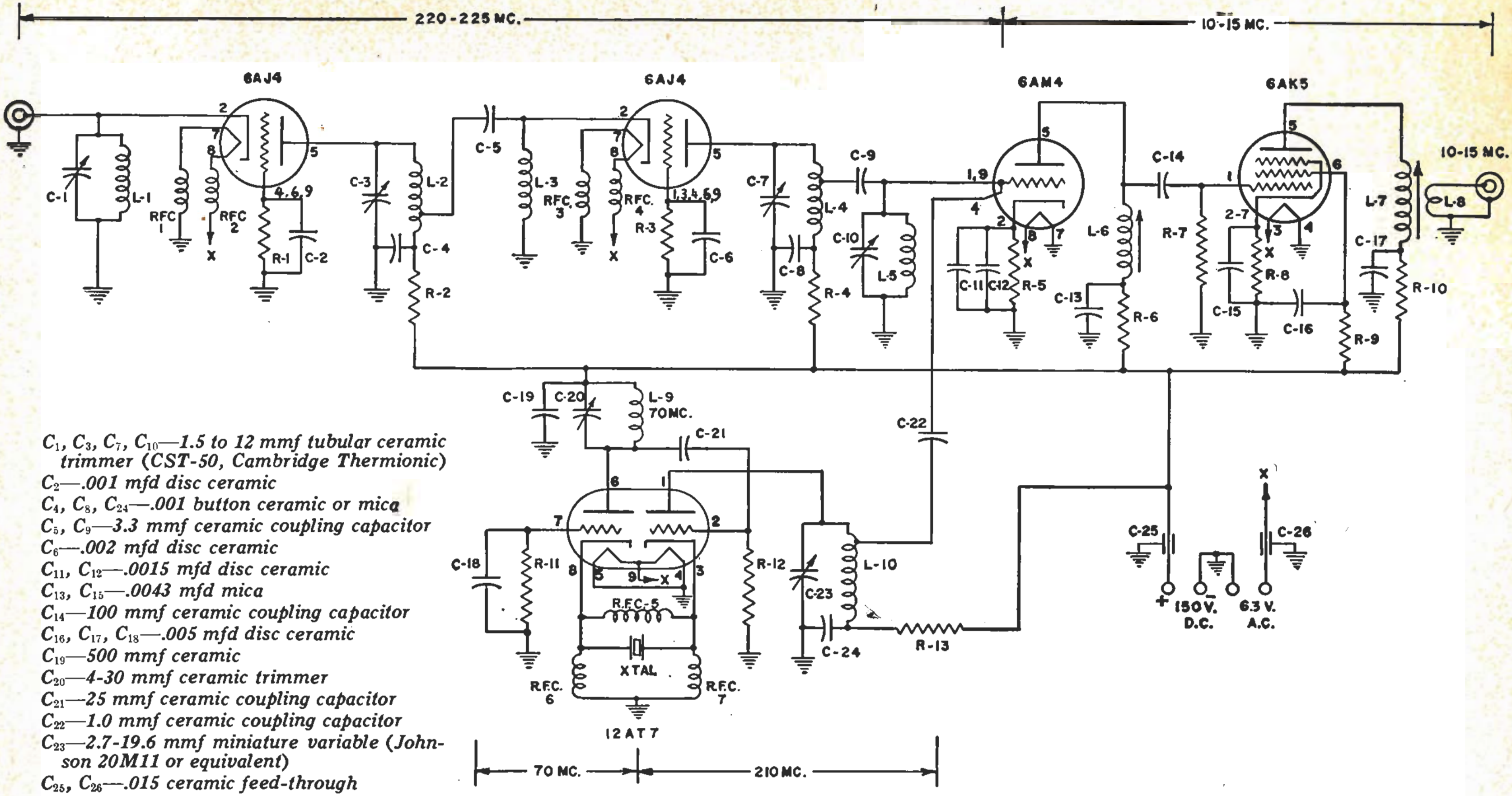

Fig. 3—Circuit diagram of 220-megacycle converter

C_1, C_3, C_7, C_{10}—*1.5 to 12 mmf tubular ceramic trimmer (CST-50, Cambridge Thermionic)*
C_2—*.001 mfd disc ceramic*
C_4, C_8, C_{24}—*.001 button ceramic or mica*
C_5, C_9—*3.3 mmf ceramic coupling capacitor*
C_6—*.002 mfd disc ceramic*
C_{11}, C_{12}—*.0015 mfd disc ceramic*
C_{13}, C_{15}—*.0043 mfd mica*
C_{14}—*100 mmf ceramic coupling capacitor*
C_{16}, C_{17}, C_{18}—*.005 mfd disc ceramic*
C_{19}—*500 mmf ceramic*
C_{20}—*4-30 mmf ceramic trimmer*
C_{21}—*25 mmf ceramic coupling capacitor*
C_{22}—*1.0 mmf ceramic coupling capacitor*
C_{23}—*2.7-19.6 mmf miniature variable (Johnson 20M11 or equivalent)*
C_{25}, C_{26}—*.015 ceramic feed-through*
R_1, R_3—*.5 megohm*
R_2 R_4, R_8, R_{13}—*100 ohms*
R_5—*56 ohms*
R_6, R_{10}—*1000 ohms*
R_7—*7500 ohms*
R_9—*3000 ohms*
R_{11}—*10,000 ohms*
R_{12}—*20,000 ohms*
L_1, L_2, L_4, L_{10}—*3t. No. 14 wound on ½-inch d. form, ⅜-inch long*
L_3—*5t. No. 22 wound in threads of ¼-20 bolt*
L_5—*3t. No. 14 wound on 3/16-inch form, ⅜-inch long*
L_6—*35t. No. 30 en. close-wound on ½-inch slug-tuned ceramic form (CTC-LS7)*
L_7—*40-45t. No. 30 en. close-wound on same type form as* L_6.
L_8—*4t. link insulated wire on cold end of* L_7.
L_9—*5t. No. 14 wound on ½-inch form, ½-inch long*
$RFC_{1\text{-}4}$—*12t. No. 24 en. wound in threads of ¼-20 bolt*
RFC_5—*5t. No. 24 en. close-wound on a ⅞-inch length of ¼-inch d. polystyrene rod*
$RFC_{6\text{-}7}$—*35t. No. 30 en. close-wound on a ¾-inch length of ¼-inch d. polystyrene rod*
XTAL—*70-megacycle overtone-type crystal (Midland or equivalent).*

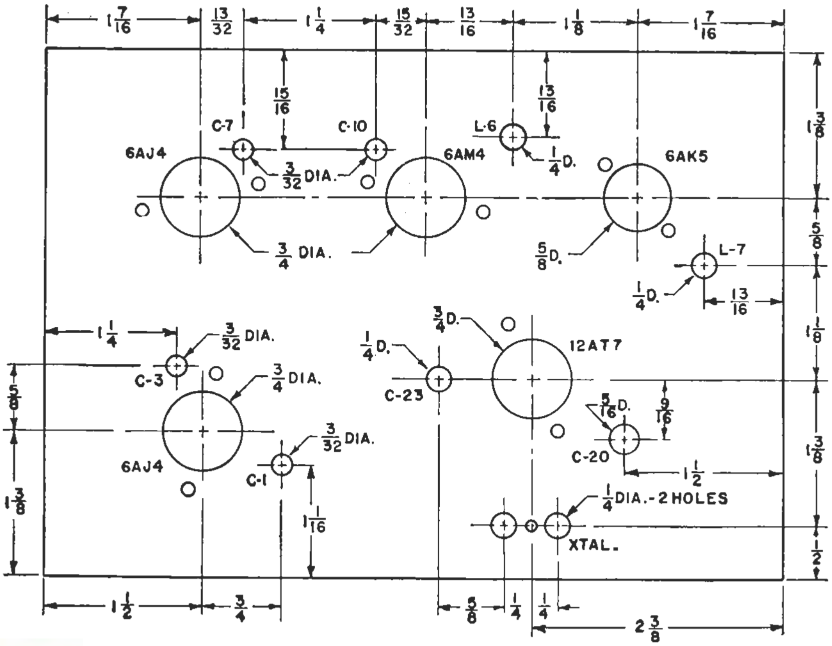

Fig. 4—Chassis layout

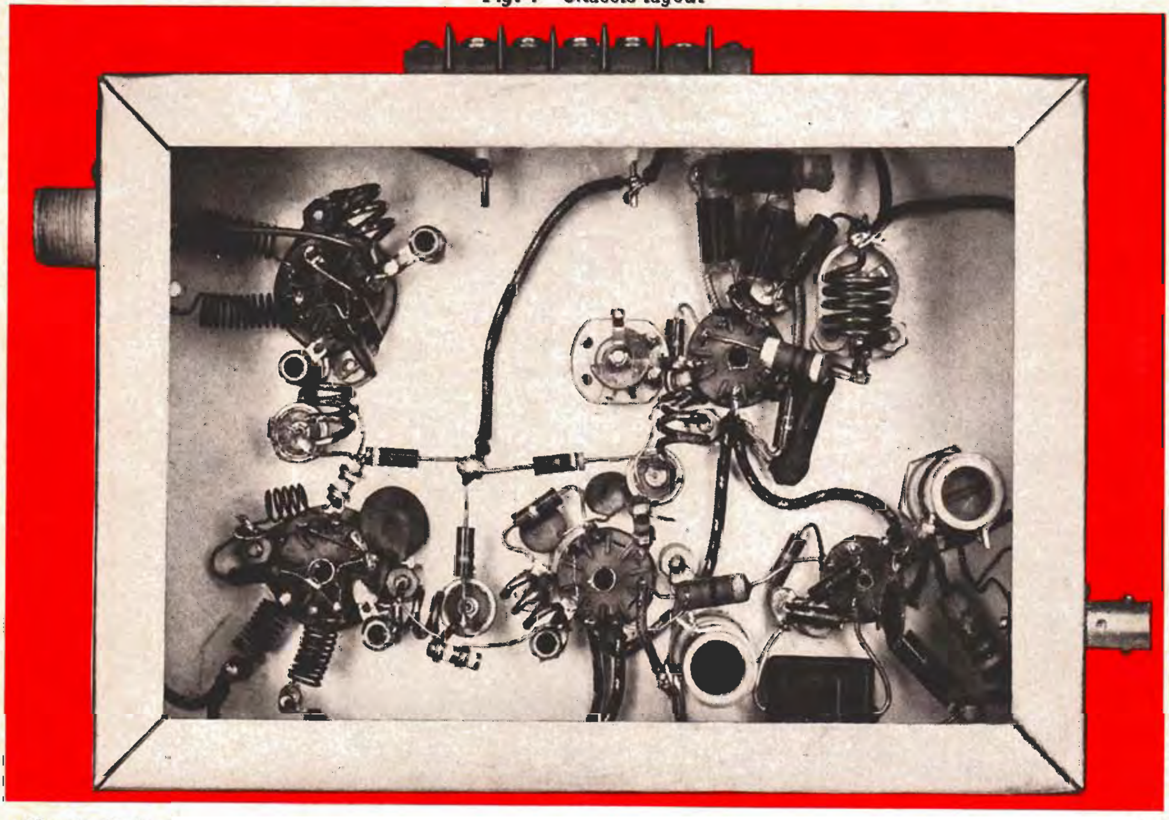

Fig. 5—Bottom view of 220-megacycle converter. RF input at top left, second RF amplifier at bottom left corner; mixer tube and slug-tuned plate coil (L_6) at bottom center; and IF amplifier and final tank coil ($L_{7\text{-}8}$) at bottom right. At top right is crystal socket, the 12AT7, C_{20}, C_{23} and other components associated with the oscillator circuit. The 6AM4 plate resistor and plate by-pass are hidden under the lower lip of the chassis. In this view most of the parts can be identified by checking their connections to tube pins.

justments is to improve the noise figure. As mentioned earlier, the converter gain may decrease slightly—but the real test is in the noise figure; so no further gain adjustments should be made as they would upset noise performance.

Before starting the noise performance adjustments it will be necessary to set up a circuit to measure output in the station receiver with which the converter is to be used. One method is to remove the receiver detector tube and use the proper socket pin to take off the signal from the last IF transformer, rectify the current therefrom either with a germanium or vacuum tube diode and measure noise at this point with a milliameter or vacuum tube voltmeter. (While it would be possible to use the receiver detector for this rectifying job, in most cases the AVC circuit also is hooked on at this point and would complicate matters.)

It is also possible to connect a milliameter or vacuum tube voltmeter to the secondary of the output transformer, providing there is a 500-ohm output tap. Ordinarily, an 8-ohm audio output will not provide enough voltage to measure conveniently.

Now the noise generator should be connected to the receiver by a short length of coaxial cable and the receiver and converter turned on. With the noise generator off, the receiver RF gain control should be set at a point where internal noise registers about .5 milliampere on the output meter attached to the station receiver. After this reference level is established, the receiver RF gain control should not be touched again during the noise performance adjustment procedure.

The next step is to turn on the noise generator and adjust its potentiometer so that the generator meter reads about mid-scale. (On the noise generator shown this would be 1 milliampere.) Now note the percentage of increase in the output meter reading as compared with its reading when the noise generator is off.

From here on the object is to make changes in the converter's input and coupling circuits which will result in this same percentage increase in the output meter reading—but with lower and lower readings on the meter in the noise generator.

What happens is this: As the amount of noise generated in the converter itself is reduced by adjusting the input and coupling between stages, a smaller and smaller amount of external noise injection is required to activate the output meter on the receiver in the same proportion.

The first adjustment to make on the converter to improve noise performance is to find the best point on L_1 to attach the input lead from the coaxial connector. In the converter shown, it was found the best tap position actually was right at the cathode tube pin. It is quite possible that in some other models optimum performance will be obtained with this input lead tapped down on the coil.

The following procedure should be used to determine the correct point to tap the input lead: Every time the input lead is moved so that it changes the percentage of increase on the output meter when the noise generator is turned on, the potentiometer on the noise generator should be adjusted to bring the output meter reading to a point where the percentage of increase on the output meter is the same as it was before the adjustment procedure was started. If the coil tap adjustment was in the right direction, the noise generator potentiometer adjustment should reduce the reading on the meter in the noise generator. If, however, obtaining the same percentage of increase is accomplished by increasing the noise generator current, the coil tap adjustment was a step in the wrong direction.

The next adjustment to make is the tap on L_2. The lead from C_5 should be soldered on the coil at various points—each time readjusting the noise generator potentiometer to see if the noise generator current goes down when obtaining the same increase on the output meter. In the converter shown, optimum performance was obtained with C_5 tapped almost exactly at the center of L_2.

The third important adjustment is the amount of oscillator voltage injection. This can be changed by trying various values of coupling capacity (C_{22}), and also by moving the tap on L_{10}. In making these adjustments, the same procedure outlined above is followed. The converter shown hit optimum performance with a 1 micro-microfarad coupling capacitor tapped about a half turn down from the plate end of L_{10}.

Adjustment of C_9 did not seem to make much difference in noise performance in the converter shown. However, it might be worth while trying tapping the leads of this capacitor at different points on L_4 and L_5.

Tricks & TOPICS

RESTORING CRACKLE FINISH

Tops of metal cabinets often become dingy and unsightly with age. These surfaces are not readily cleaned with water or furniture polishes. A few experiments in my ham shack have resulted in a simple solution to this problem. Apply with a cotton cloth a few drops of mineral oil to the dull crackle surface. Wipe off excess oil by hard rubbing with a clean cloth. Automotive oil such as No. 20 or 30 is excellent for the purpose. The original sparkle and uniformity of the finish will thus be obtained. Try it and you'll be amazed.

—Robert E. Burnett, W2YIV

HOW TO GET G-E HAM NEWS

G-E HAM NEWS may be obtained free from G-E tube distributors—or, for $1 per year G.E. will mail HAM NEWS to your home. Write to: G-E HAM NEWS, Tube Department, General Electric Co., Schenectady 5, N. Y. This subscription plan is available to amateurs only in the United States, Alaska, Hawaii and the Panama Canal Zone. Amateurs in Canada should address requests to Canadian General Electric Co., Ltd., Electronic Tube Marketing Section, 830 Lansdowne Ave., Toronto, Ontario, Canada. In all other countries G-E HAM NEWS may be obtained through International General Electric distributors.

PARASITICS

In the schematic diagram for the VTVM Adapter described in the July-August, 1954, issue of G-E HAM NEWS (Volume 9, No. 4) a chassis-ground connection in the negative (black) lead circuit was not indicated. While this omission will not affect the d-c operation of the instrument, such a ground is necessary to provide a return path for RF when using the RF probe with the chassis-grounded connector indicated.

SWEEPING *the* SPECTRUM

Several people have remarked, after reading about the Edison Radio Amateur Award winner and the runners-up who received special citations, that they know someone who also rendered an outstanding public service. In each case, however, no one took the trouble to nominate the amateur in question. Thus his work went unnoticed by the judges of our Award. As in most such awards, one of the biggest jobs is hunting for Award candidates. This is especially true with amateur radio awards because for the most part amateurs are modest individuals. So if you know of an amateur you feel worthy of the Edison Radio Amateur Award, be sure to nominate him. The rules of the Award are given in our advertisements in the September and October issues of both CQ and QST magazines.

* * *

W0NPA apparently found there are no secrets in a ham wedding—what with mobiles all over the place reporting your every movement. "Ham Hum," published by Ak-Sar-Ben Radio Club (W8EQU), reports mobiles were stationed at the church and at the happy couple's "hidden" get-away car.

* * *

A note in "Sparks," published by the Brandon (Manitoba) Amateur Radio Club, informs us that VE4PA visited VE4WW and VE4SB and "spent a couple of fruitless hours watching the snowflakes on Gordon's 21-inch video screen." Also, "Gordon (VE-4WW) is quite happy over three and a half minutes of transmission from Memphis a week ago last something-or-other. Anyway it's a nice piece of furniture." Some of us in the "more advanced" TV locations are wondering if the lads up that way know really how well off they are!

* * *

"Show me a man who has a hobby and I'll show you a conscientious man whose effort and success is above average. Of all the hobbies, it is safe to say ham radio is the most complete both politically and technically. No other hobby can serve the public as adequately as can ham radio. Probably no other hobby has as many jealous commercial interests eyeing our assets. No other hobby can or has helped the advance of electronics as ham radio has done."

Thus writes W9YME in "Marc Sparks," published by the Michiana Amateur Radio Club (W9AB). He adds that none of these achievements can or could be accomplished without the co-operative efforts of individual hams organized into clubs. Individually, he points out, we are but persons with hobbies; collectively, we constitute a powerful force that can help not only ourselves but our community, our nation and the world. And I might point out all that is in addition to the fun and fine friendships club activities can bring.

* * *

Our first Bound Volume was so popular, we are getting a lot of requests for a second Bound Volume. The first volume contained all the issues of G-E HAM NEWS published from 1946—when G-E HAM NEWS began—through 1950. We plan to make up another bound volume at the end of our second five-year period of publication. Thus our second Bound Volume will contain all issues published in the years 1951 through 1955.

We're sorry it is so long between Bound Volumes, but publishing bi-monthly as we do, it takes that long to accumulate sufficient issues to make binding worthwhile. If by any chance any of you wish to make reservation at this early date for the second Bound Volume of G-E HAM NEWS, we'll be glad to keep your name and address on file until the book is ready. *But please do not send any money now!* We sell the Bound Volumes at the cost of binding and handling (the first one cost $2 per copy) and we cannot tell at this time just what binding will cost a year and a half from now.

* * *

The editor was looking over ARRL's bibliography of TVI literature the other day and reminded us to remind you that we still have some back copies of the issue of G-E HAM NEWS which described our "TVR High-Pass Filter." This highly effective filter for a TV receiver input incorporates an interesting design feature and for a very few cents can be put together in a matter of minutes. It appears in the March-April, 1951, issue of G-E HAM NEWS (Volume 6, No. 2). I'll be glad to send you a copy, if you want one. Incidentally, one of the fellows who used one of these little filters reported it was highly effective as a fuse when lightning struck his TV line. He said the filter just seemed to evaporate. He couldn't find more than a few droplets of copper left. But the TV set was still there. We don't recommend the filter as a substitute for normal lightning arresting precautions, however.

—*Lighthouse Larry*

UHF DXpert

A. R. KOCH, W2RMA

Art Koch, W2RMA—designer of the 220-megacycle converter described in this issue of G-E HAM NEWS—makes G-E UHF klystrons tick during the day. Then he goes home and makes UHF ham rigs tick. He's a design engineer at the industrial and transmitting tube plant in Schenectady and has supervised the installation of UHF klystrons in a number of the nation's most progressive TV stations.

G.E.'s 12-kilowatt klystrons come in six types—each covering a segment of the 470 to 890-megacycle UHF TV band. They are tunable within their ranges and are triple-resonator type tubes. Klystrons stand about five feet high, draw 35 amperes of heater current at 5.5 volts, and require 17,000 volts d-c at 3 amperes. Driving power averages 25 watts—and most stations use a 4X150 as driver. Two klystrons are used in a UHF-TV station—one to amplify the visual signal, the other to amplify the sound—and the two are mixed in a "Filtrexer" before being fed into the antenna.

Art, shown here setting up some gear to test a klystron, is the designer of one of the UHF cavities illustrated in the ARRL Handbook, and the Super 430 (G-E HAM NEWS, Volume 8, No. 4).

Electronic TUBES

G-E HAM NEWS
Available FREE from
G-E Electronic Tube Distributors

published bi-monthly by
TUBE DEPARTMENT
GENERAL ELECTRIC
Schenectady 5, N. Y.
In Canada
Canadian General Electric Co., Ltd.
Toronto, Ontario

S. E. McCALLUM, W2ZBY—EDITOR

Printed in U.S.A.

VOL. 9—NO. 5

SEPTEMBER-OCTOBER, 1954

Electronic
TUBES

G-E HAM NEWS

Copyright 1954, by General Electric Company

TUBE DEPARTMENT
GENERAL ELECTRIC
Schenectady 5, N. Y.

NOVEMBER–DECEMBER, 1954

VOL. 9–NO. 6

600-WATT ALL-BAND AMPLIFIER

Push-pull 813's Ease Your Steps to Higher Power

There's no "easy" way to power—but this amplifier, designed and described by W2GYV, employs tested techniques and standard components to make the road to power as smooth as possible.

—*Lighthouse Larry*

Deadline for nominations for the Third Annual Edison Radio Amateur Award is January 3, 1955 . . . Pick a candidate and send in your nominating letter . . . see page 8.

CONTENTS

600-WATT ALL-BAND AMPLIFIER

GENERAL DESCRIPTION

Here's a husky all-band final that does not utilize any new or trick circuits or any substantially different mechanical layout. It will be recognized from the circuit diagram and photographs as a conventional push-pull tetrode amplifier constructed in a straightforward manner. It illustrates the use of modern components and practical design.

In this complicated age, there is much to be said for an occasional attempt at simplification; and those seeking a respectable amount of power may find this amplifier fills their needs without emptying their pocketbooks or fraying their nerves during construction and testing.

The amplifier employs a pair of GL-813 tubes in a neutralized push-pull circuit. A multiband grid tank allows the input circuits to be permanently shielded and simplifies band-changing. The plate circuit uses standard plug-in coils which are easily accessible for band changing through the shielded and RF weather-stripped panel door.

No metering is provided in the amplifier itself. The incorporation of meters would make shielding and circuit isolation more difficult. It is much simpler and forthright to install grid, screen and plate current meters in a standard three-hole panel mounted elsewhere in the rack and connected in the power leads going from the amplifier after all RF has been filtered from them.

A regulated bias supply is included in the unit since with the low grid currents encountered it can be a simple affair and is something that would probably have to be built up in any event.

All controls, including input and output coupling, are conveniently located on the front panel. Coaxial connectors are used for the RF input and output and HV plug connectors for plate and screen leads. The grid meter and interlock circuit connections are made with two-contact microphone plugs mounted under a small shield on the rear of the chassis—thus making it a short and easy operation to disconnect all leads and remove the amplifier from its rack. The AC input—for bias and filament power—is through a cord and plug leading to the control unit shown in G-E HAM NEWS of March-April, 1954. (Volume 9, No. 2).

CIRCUIT DETAILS

The only part of the circuit which may be out of the ordinary is the use of a four-section variable capacitor, C_{12}, in the plate tank. This capacitor is adapted from a standard unit as explained under the constructional details and allows optimum L/C ratio to be achieved on all bands. It also makes tuning less critical on the three highest bands. The proper sections of the capacitor are selected automatically by jumpers on the coils between pins 1 and 2 and 7 and 8.

The plate coils are standard 500-watt units and although the amplifier has been run for extended periods at inputs of over 600 watts no undue heating of the coils was experienced. Jacks 3 and 6 on the coil socket were not used in this design.

The output is through a shielded link as specified. These links are available in 1, 2, and 3 turns. Generally, a 1-turn link is considered satisfactory at 10 meters, a 2-turn link at 15 and 20 meters, and a 3-turn link for 40 and 80. However, during tests, a 2-turn link was found satisfactory for all bands when working into a 52-ohm coaxial line. Experimentation is recommended here as each antenna system may be slightly different. What works at one installation may not work well at another, even though the same general system is used, since one line may have a different standing wave ratio than the other. At any rate, link coupling of this sort is probably the easiest of all coupling devices to adjust.

The vacuum capacitors C_6 and C_{11} are for the purpose of providing a short low impedance path for the higher harmonics which might cause TVI. It should be pointed out that they are not necessary to the normal satisfactory operation of the amplifier and may be omitted if TVI is not a problem.

Don't be misled, however, into thinking that these capacitors themselves will be a complete cure for all TVI. They are an aid in stubborn cases and you may well want to try the amplifier before installing them. However, the vacuum capacitors are part of the total plate tank capacitance and the coil modifications given in the coil table are based on their use. Leaving them out may not necessitate the coil modifications listed under "Coil Data."

The neutralizing capacitors, C_2 and C_5, were found necessary to completely stabilize the amplifier. All normal checks failed to reveal the need for neutralizing; but on checking the amplifier for stability by operating it at zero bias, no RF drive, and with plate and screen voltages adjusted to give rated static plate and screen dissipation, it was found that a weak oscillation would occur when both grid and plate were tuned to the same frequency. The neutralizing wires were then adjusted until this did not occur. This should be done with the 10 meter coils in place and will then hold for all-band operation. The neutralizing wires are made from No. 14 copper wire and are brought through the chassis approximately one inch from the tubes. Small ceramic feed-through insulators were used for this purpose. Start off with wires reaching to the tops of the tube anodes and adjust them by clipping off ½ inch at a time until a length is found which will give complete neutralization. Fine adjustment is made by changing the spacing between wires and tubes by means of an insulated rod through the ¼-inch holes in the back of the shield.

The bias supply is conventional. It utilizes a GL-OA3/VR75 tube for regulation and so furnishes 75 volts of fixed bias. The remaining bias is developed across R_1 by the flow of grid current. This resistor may be seen in the photographs on top of the bias supply sub-chassis. The remaining resistors and selenium rectifier are mounted under this sub-chassis. The 75 volts is more than sufficient for plate current cutoff, allowing the driver to be keyed for CW work provided the screen is supplied from a fixed supply or from a voltage divider from the HV plate supply. Do not attempt CW operation if the screen is supplied through a dropping resistor.

Liberal use has been made of by-pass capacitors and RF chokes. All of these precautions make for stable, trouble-free operation and are well worth their cost.

An interlock switch S_1, is provided to protect the absent-minded when changing coils. It should be connected in the power supply in such a manner that the primary voltage to the plate supply is removed when the door is opened. The micro-switch used is a SPDT switch and should be connected so that the switch opens the circuit when the door is open. In addition, provision should be made for shorting the high voltage lead to discharge the filter capacitors before changing coils. Make up a shorting stick NOW. AND USE IT! A fellow isn't even allowed one mistake at these voltages!

MECHANICAL DETAILS

Much thought and time was given trying to evolve some novel and suitable mechanical layout—something that would be eye-catching and efficient. In fact, the whole project was delayed several months because of this. Several unique ideas were dreamed up but discarded because they were too expensive, too difficult to construct without metal-working facilities or else they just shouted over-design.

The old standby of chassis and panel construction proved to be not only the easiest to handle with the usual facilities but also promised to fit into most modern station layouts.

The biggest problem (and it was small compared to some of the layouts that were considered) was that of getting the plate tank capacitor and link controls out to the front panel. The solution was found with standard components. The capacitor is driven with a right-angle drive unit, two universal joints, and some ¼-inch diameter shaft. Panel bushings are used wherever the shaft goes through the chassis or panel. The link control required only two flexible shafts. The arrangement should be evident by inspecting the photographs.

The parts layout is also clearly shown and no detailed drawings are given. The multiband tank is mounted on spacers so the tuning and link shafts are centered on the lower section of the front panel.

The bias supply is built on a separate sub-chassis easily shaped and mounted as shown and there is nothing critical about the placement of parts. The sub-chassis is fastened to the side of the main chassis by two screws in front and by the feed-through capacitors, C_{20} and C_{22} on the rear apron of the main chassis. The AC line filter capacitors, C_{25} and C_{27} are mounted on the bias chassis and project through the main chassis in close-fitting holes.

Ventilation is provided through the panel door and the vent holes over each tube. Natural draft provides sufficient air to prevent overheating of the tubes.

CONSTRUCTIONAL DETAILS

All components are mounted as shown in the photographs on a 13 x 17 x 4-inch aluminum chassis. Aluminum is recommended rather than steel as it is both easier to work and will not rust in damp locations. Even a plated steel chassis will rust around the drilled holes. No special precautions are necessary in the layout that cannot be observed in the illustrations.

The front panel calls for special attention if satisfactory shielding is to be achieved. The panel used is a 12¼-inch Par-Metal Grille Door Panel (Cat. No. G-682). In making the panel RF-tight, the paint was removed by soaking the entire panel in paint remover and then rinsing well. After this was done, the panel was copper-plated. While plating is not absolutely essential it will result in a more permanent shielding job.

After plating, a piece of standard bronze insect screen was carefully soldered to the inside of the grill door.

The next operation was to install the RF weather stripping. The particular material used was made by Instrument Specialties Co., Little Falls, N. J. (Cat. No. 97-112-H). This material is ⅞-inch-wide beryllium copper strip with ⅛-inch wide fingers, 5½ fingers per inch. Similar stripping of other manufacture could also be used satisfactorily. This strip is held to the panel by a ½ x ½-inch aluminum angle running completely around the sides and top of the door opening and secured to the panel with brass machine screws.

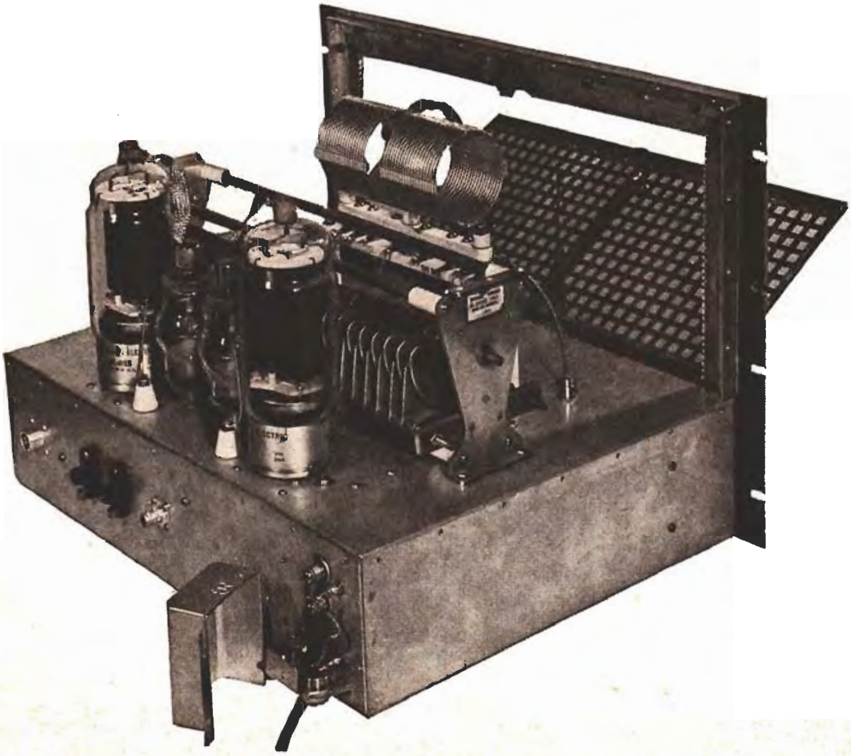

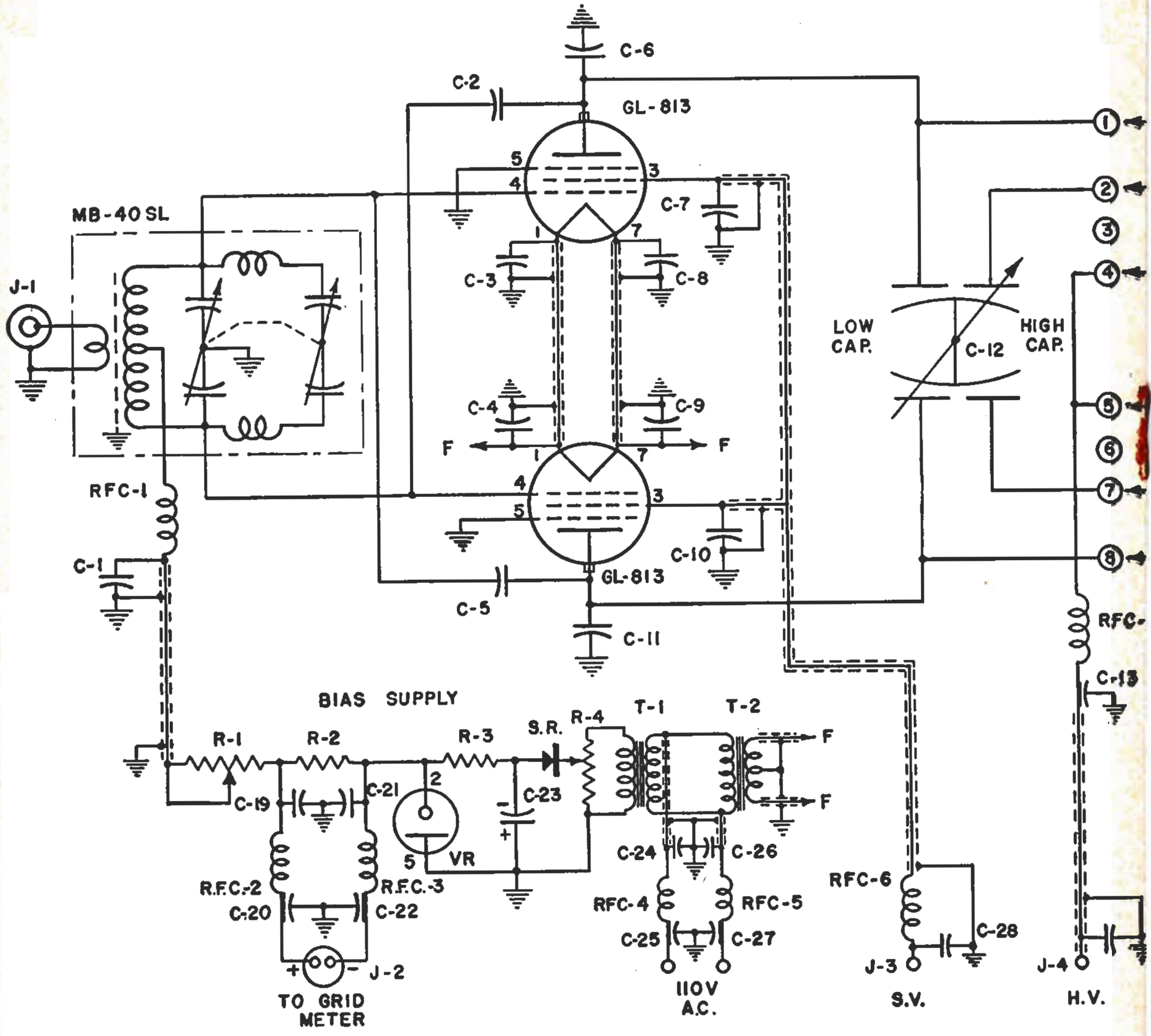

C_1, C_3, C_4, C_8, C_9—.002 mfd. disc ceramic (Centralab DD-202)
C_2, C_5—Neutralizing wires (see text)
C_6, C_{11}—12 mmf. vacuum capacitor (GL-1L21 or 1L25)
C_{12}—100 mmf. per section, split stator. (Bud 1633A modified as described in text.)
C_7, C_{10}, C_{28}—.0005 mfd., 1000-volt mica (Sprague 3CFM-35)
C_{13}—.002 mfd., 5 KV (Sprague Hypass 47P16)
C_{14}—500 mmf., 20 KV ceramic (Sprague 20DK-T5)
C_{15}, C_{16}, C_{17}, C_{18}, C_{20}, C_{22}—.001 mfd., 500-volt ceramic feed-thru (Centralab No. FT-1000)
C_{19}, C_{21}, C_{24}, C_{26}—.001 mfd., disc ceramic (Centralab DD-102)
C_{23}—10 mfd., 450 VDC electrolytic (Sprague EL-1)
C_{25}, C_{27}—0.1 mfd., 250 VAC (Sprague Hypass 48P9)
R_1—5000-ohm, 25-watt, adjustable wire-wound
R_2—100-ohm, 2-watt
R_3—10,000-ohm, 5-watt, wire-wound
R_4—25,000-ohm, 25-watt, adjustable, wire-wound
T_1—Thordarson T-22R12, 117/120, 6.3-volt, selenium rectifier power transformer. (6.3-volt winding not used.)
T_2—Thordarson T-21F19, 10-volt, 12-amp. filament transformer
SR—100 ma., 135-volt selenium rectifier (GE-6RS5GH1A)
MB-40SL—National multiband tank unit
L_1—B & W type TVH, 500-watt coils.
L_2—B & W shielded link No. 3282.
J_1—UG—90/U, BNC connector
J_2, J_6—Amphenol 80-PC2F locknut receptacles.
J_3, J_4—Millen 37001 HV connector
J_5—SO-239, UHF connector
S_1—Microswitch (BZ-RQ1)
RFC_1—2.5 mh RF choke
RFC_2, RFC_3, RFC_6—Ohmite Z-50
RFC_4, RFC_5—25 turns, 1/4" diameter, No. 16 en., close wound, self-supporting.
RFC_7—4 mh, 750 ma. (Miller No. 4336)
VR—GL-OA3/VR75 voltage regulator tube

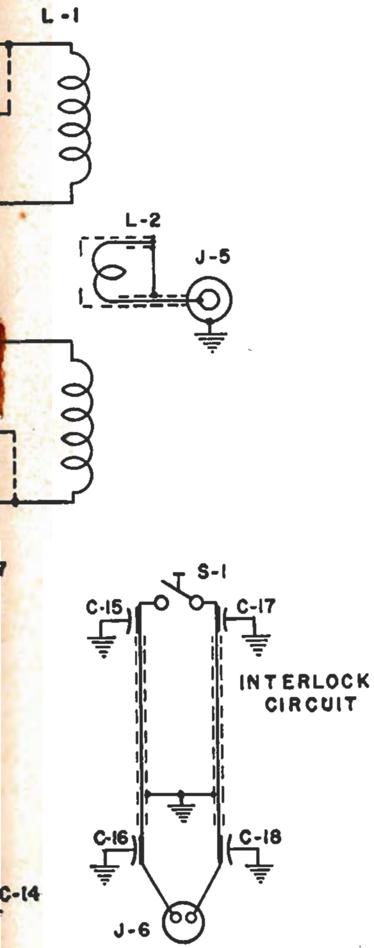

PLATE TANK COIL DATA

All coils B & W TVH, 2½-inch inside diameter

80—38 t. No. 14 spaced to 5¼-inch length with ¾-inch separation in center. (Jumpers between pins 1 & 2 and 7 & 8.)

40—24 t.; other specifications same as 80-meter coil, including jumpers.

20—12 t. No. 12 spaced to 4¾-inch length with ¾-inch separation in center. (TVH with one turn removed from each end.)

15—8 t. of ⅛-inch d. wire or tubing spaced to 6-inch length with ¾-inch separation in center. (TVH with one turn removed from each end.)

10—4 t. of ⅛-inch d. wire or tubing spaced to 3-inch length with ¾-inch separation in center. (TVH with two turns removed from each end.)

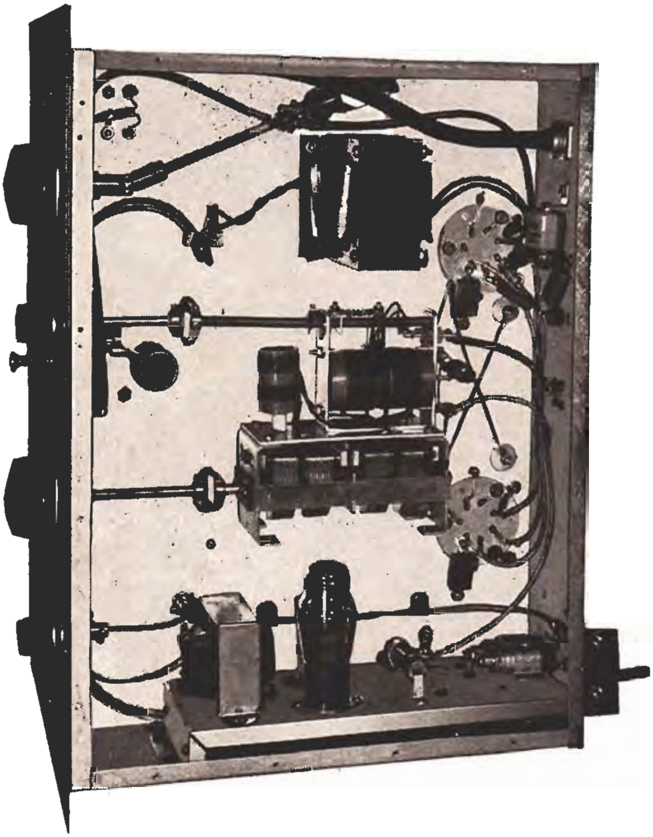

Bottom view clearly shows placement of components. Note RG-8/U output link runs from output connector at top right of picture around upper edge and down to similar connector at left center. Bias supply components mounted on sub-chassis. In close-up picture (below) note RFC_7, mounted underneath final tank coil. This view also shows lugs added to tank tuning capacitor when modified as described in text.

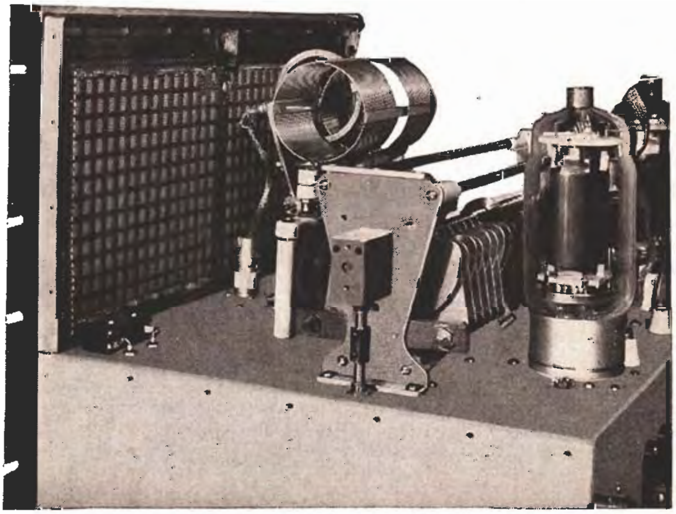

This angle serves the dual purpose of providing a support for the cover as well as holding down the RF weather strip.

The chassis cover is made of 1/16-inch soft aluminum, bent by clamping it over the edge of a work bench using a piece of angle iron and two "C" clamps. Lips should be bent on the edges of the back to be bolted to the sides after all bending is completed. Self-tapping screws are used to hold things together here. The ventilation holes over the tubes should be drilled before the cover is bent. (Those who notice the photographs show a plate with vent holes bolted over two large holes in the top of the shield are asked to excuse a mistake made during construction. It was intended to drill a fancy design in the top for vent purposes but the drill unfortunately slipped. Again, we recommend simplicity!)

The chassis for the bias supply was conveniently formed over a short length of 2 x 4-inch lumber. This made it exactly the right width and also furnished a back-up block for drilling operations.

Do not skimp on the number of screws used in holding the shielding together. Any gaps in the joints provide a chance for RF to leak out. The bottom plate should be fastened with several self-tapping screws along each edge rather than with the screws in each corner as provided by the manufacturer.

Two ¼-inch diameter holes should be drilled in the back opposite the neutralizing wires for later use in adjusting the neutralization.

After the construction and wiring is complete, the outside of the panel and the cover can be painted with a hard machinery enamel.

After all mechanical details are complete, the amplifier may be wired. Shielded wire was used exclusively—RG-58/U coax for the high voltage leads and ordinary single-conductor shielded wire for the low voltage wiring. The filament leads should be No. 14 shielded wire. Ground the shielding at both ends of the leads and wherever else it may be convenient.

Lead lengths on all by-pass condensers should be kept as short as possible.

The Sprague Hy-Pass capacitor used for C_{13} was considered desirable as it allowed the return to be made to the under side of the chassis, providing a short and direct path to the cathode. If it were made to the top of the chassis, the RF would have to find its way through the chassis in order to complete the circuit to the cathodes and could well result in instability due to incomplete plate by-passing. This capacitor is mounted through a snug-fitting hole and held in place by a small brass angle on the underside of the chassis. This angle also provides the ground connection for the capacitor.

The interlock circuit and grid current meter terminals are protected by an aluminum cover cut from a coil shield can.

MODIFYING THE PLATE CAPACITOR

The modification of the plate tuning capacitor requires some careful workmanship. The capacitor, before modification, consisted of two sections—each with ten stator plates. The seventh stator plate from each end was removed by sawing through the support rods ¼-inch from each side of the plates. Next, four pieces of ½-inch diameter insulating rod (mycalex was used) were cut to fit exactly the gaps left between the sixth to eighth plates. The ends of these insulating spacers were drilled and tapped to take the threads of the stator support rods. No changes were made in the rotor assembly. This left a capacitor having four separate stator sections—the two inside sections consisting of three plates each, and the two outside sections six plates each. Suitable heavy solder lugs, visible in the photographs, are inserted between both ends of the insulated rod and adjacent plates to allow connections to be made to the stators.

The shielded link is plugged into an SO-239 coaxial connector mounted on top of the chassis, to allow the link line to feed through the chassis and connect to the output connector on the rear apron. Both connectors are shielded where the coaxial jumper connects by means of standard receptacle hoods designed for this purpose. The shielded link is supplied with a pair of shielded leads. To use the link with coaxial circuitry, it is necessary to connect one inner conductor to the shielding braid right at the link, leaving a single shielded lead for connection (see circuit diagram).

The bases of the GL-813's are grounded to the chassis by small metal clips from a socket for a GL-4-250A. Since these may not be readily available, a suitable clip can be made from spring brass or bronze.

TUNING UP

The first step in getting the amplifier into operation is to set the bias voltage. This can best be done before the supply is fastened in place. After checking to be sure all wiring is correct, apply power and adjust R_4 for a current of 5 milliamperes through the VR tube. The easiest way to check this is to measure the voltage drop across the 10,000-ohm series resistor, R_3, using a VTVM or high resistance DC voltmeter. This will be 50 volts DC for 5 milliamperes of current. Bias resistor R_1 should be set at 3500 ohms for a plate supply voltage of 1600 volts and 3000 ohms for 2000 volts. If only CW operation is contemplated, set R_1 at 2500 ohms. The higher values will be satisfactory for both phone and CW work but it is recommended that slightly lower grid drive be used on CW, approximately 7 milliamperes per tube. It is good practice to use the minimum amount of drive for full output under all conditions as an aid to keeping down harmonic generation.

Neutralizing should be accomplished as explained under "Circuit Details" *only* if fully adjustable plate and screen voltages are available. Otherwise it should be done in the conventional manner by coupling a sensitive RF indicator to the plate tank and adjusting the neutralizing wires for minimum output.

It is recommended that all wiring to the power supplies and meters be shielded and the shields grounded at both ends.

Several methods of obtaining screen voltage are possible. A series dropping resistor from the plate supply may be used for phone work only or a voltage divider across the plate suppply could be used for CW. The method used with this final was a fixed supply of 350 to 400 volts with choke output consisting of a standard 10-henry filter choke. This method allows the screens to modulate themselves and has the added advantage of not requiring any changes for CW work. When going from phone to CW it is only necessary to turn off the modulator supply and short the secondary of the modulation transformer.

This amplifier has proved itself in all respects. It is easy to build; provides a good quality signal; and offers sufficient power to compete with the best.

PARASITICS

In the 220-megacycle converter in the September-October 1954, issue of G-E HAM NEWS (Vol. 9, No. 5), coils L_1, L_2, L_4 and L_{10} should be wound on ¼-inch forms instead of ½-inch forms as described in the parts list. Also, RFC_6 should have 15 turns, instead of 5.

SWEEPING *the* SPECTRUM

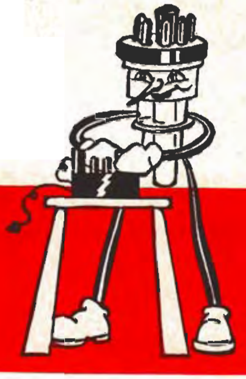

Hey, fellows, don't forget the deadline for entering nominations in the Third Annual Edison Radio Amateur Award is January 3, 1955. Complete rules are on page one of the September and October issues of QST and page one of the September issue of CQ. The award means not only acclaim for the winner and recognition for the person responsible for his nomination—but also the Award gives ham radio a big boost. Get those nominations in.

* * *

CD workers may be interested in the following article by VE4BN in "Sparks," published by the Brandon (Manitoba) Amateur Radio Club.

"During the last war the enemy had a CD communications system—one of the most extensive nets I ever had the opportunity to monitor. The number of stations on this net was amazing. The area covered was massive—from Channel to Baltic in the north, along the Russian front, south to Italy, along the Mediterranean, and all the land between. Guess what band this operation took place on . . . long-wave. Down around 170 kcs.

"The operators were good, the discipline rigid—and unauthorized transmissions were nil. The activity that took place on this net after an Allied raid on the Ruhr was feverish in its intensity. All traffic was coded, not high-grade cypher, and not for security's sake—but for speed in transmission. These messages were requests for medical, fire fighting aid, etc. The transmitters were VFO, several stations could work at once by going up or down in frequency, and still be very close to net frequency. This can only be accomplished on long-wave. And guess the mode of operations . . . CW."

* * *

One letter out of ten—and we get more than a thousand here in the course of a year—asks how to change one of our circuits in order that a slightly different component can be used or so the piece of equipment will do something a little different than what it was designed for.

These are not easy letters to answer in most cases. We want to help all we can. But, as we have written to countless fellows, it simply is not possible for us to enter into a design or re-design project upon individual request. Usually, it's not only that the design or redesign calculations take a lot of time (we build each piece of equipment on paper before touching a drill or soldering iron) but, also, it's a matter of responsibility.

We simply can't afford to make some calculations and then pass this information on to someone else to carry through. For we stand behind every design we publish; and that means we have built the piece of equipment—often several models of it—and tested it thoroughly. So we know it works the way we say it does.

Now for us to go back somewhere near the beginning of the job and make some design changes so the equipment will operate a little differently—and still guarantee operation—may not sound like a big project. But sometimes we can't tell how big a project such a change is until we also carry through with perhaps new construction and new conditions and complete a series of tests on the new design. And this, as I said before, we cannot do on individual request. So, in most cases, we are forced to reply by saying simply that we are sorry but the design has been worked out to do that particular job in that particular way, and with those particular components—and in making changes and substitutions you'll be on your own.

* * *

Good dynamic regulation in a power supply (see G-E HAM NEWS, Volume 9, Nos. 1 & 2) is particularly important in an SSB transmitter to obtain the peak output of which the amplifier is capable. And with so many fellows turning to SSB (over a thousand, according to what we hear), the question continually has come up as to just what practical advantage you get with 100 or so microfarads of capacity in your power supply filter. In other words, a lot of fellows ask if 20 or 30 microfarads won't do just as well in practical operation.

The answer lies in the oscillograms of our issue of Volume 9, No. 1. They show the sort of dynamic regulation you get with varying amounts of capacity. They show how performance improves continually as you add capacity. You will note, however, that the performance has improved tremendously by the time the capacitance reaches a value of 45 microfarads. After that, although the improvement continues with additional capacitance, the improvement naturally is smaller.

Now when you get into this latter region—the region where, quantitatively, the improvement is small—the effect on practical operation of your transmitter begins to depend to a larger and larger degree on just how well the rig is working in other respects. In other words, if everything else in the transmitter is otherwise capable of ideal performance, the best dynamic power supply regulation obtainable is necessary to exploit this capability. On the other hand, if the rig's capability is limited, the improvement brought about by the last 50 microfarads or so of filter capacity will not make a great difference in practical on-the-air operation.

What it all boils down to is this, as we said in Volume 9, No. 2: "It is difficult to see how one can get too much capacity built into the power supply." This means, of course, you should put in all the capacity you can get hold of—but don't starve the XYL and Jr. op in the process of buying filter capacitors.

—*Lighthouse Larry*

To Honor Amateur Radio

FOR OUTSTANDING PUBLIC SERVICE

Nominations now are open for the Third Annual Edison Radio Amateur Award—to be granted for outstanding public service by a United States amateur in 1954. The deadline is January 3, 1955.

Any individual or group may nominate a candidate for this Award. Letters of nomination should include all details of the public service performed, and should be mailed to:

Edison Radio Amateur Award Committee
Tube Department
General Electric Company
Schenectady 5, New York

Judging will take place in mid-January and presentation of the Award and prize will follow shortly thereafter. Judges for the 1954 Award are:

Val Peterson, Administrator, FCDA
E. Roland Harriman, President, Red Cross
Edward M. Webster, Commissioner, FCC
Goodwin L. Dosland, President, ARRL

Detailed Award rules are listed on page one of QST magazine for September and October and CQ magazine for September. A copy of these rules will be mailed to anyone upon request.

Electronic TUBES

G-E HAM NEWS

Available FREE from

G-E Electronic Tube Distributors

published bi-monthly by

TUBE DEPARTMENT
GENERAL ELECTRIC
Schenectady 5, N. Y.
In Canada
Canadian General Electric Co., Ltd.
Toronto, Ontario

S. E. McCALLUM, W2ZBY—EDITOR

Printed in U.S.A.

Vol. 9 - No. 6 NOVEMBER - DECEMBER, 1954

Electronic
TUBES

TUBE DEPARTMENT
GENERAL ELECTRIC
Schenectady 5, N. Y.

G-E HAM NEWS

MARCH-APRIL, 1955

VOL. 10–NO. 2

HIGH ATTENUATION LOW-PASS AUDIO FILTER

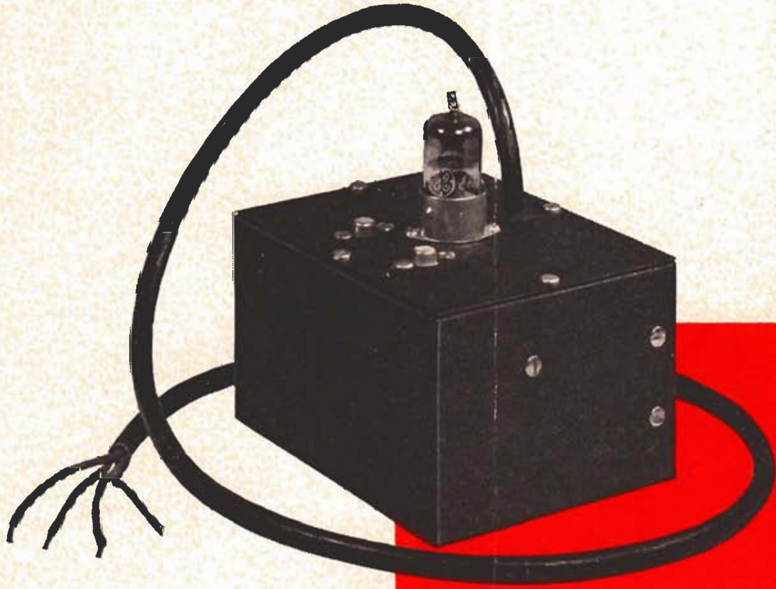

This audio filter for receiver or speech amplifier uses inexpensive unshielded coils plus a few of W2KUJ's slick tricks to obtain an attenuation slope approaching that possible with high-priced toroid coils.

—Lighthouse Larry

INTRODUCING A NEW COLUMNIST FOR "OPERATION CRYSTAL"

CONTENTS

OPERATION CRYSTAL

The ideas for OPERATION CRYSTAL (see G-E HAM NEWS, Volume 10, No. 1) have been rolling in so fast that Lighthouse Larry has had to add the character you see in the above heading to his staff. Gentlemen: Meet "DANNY DIODE," now in charge of this department. He has had a tough time choosing the three ideas and circuits published below which qualify for the certificates for $10 in G-E Electronic Tubes. All ideas submitted before December 1, 1955, will be considered for publication in the next five issues of G-E HAM NEWS. Send your idea in to Danny Diode today!!

—*Lighthouse Larry*

"KNOB TWISTER'S SPECIAL"

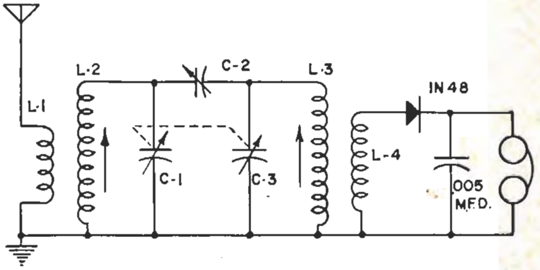

This circuit well deserves the above title for it has five tuning adjustments, two of which are ganged for convenience! **William Patzer, W8RWX, Benton Harbor, Michigan,** says that the 1000-watt local broadcast station was received with enough volume to drive a 4-inch speaker in a quiet room. The selectivity is adequate to separate all the Chicago stations, about 70 miles away, with good earphone volume.

The diagram shows the vari-loopstick coils L_2 and L_3, coupled to L_1 and L_4. These are 30 turns of No. 26 DSC wire wound on a close-fitting cardboard sleeve placed over the winding on the loopstick. The sleeve may be held in place with scotch tape or model-airplane cement after positioning for maximum gain. C_1 and C_3 is a dual 365-mmf variable condenser salvaged from an old broadcast receiver. C_2 is a 0.005-mfd ceramic condenser, and the diode is a 1N48 or 1N52. Some adjustment in the L/C ratio in the tuned circuits can be obtained by adjusting the tuning slugs in the loopsticks for maximum volume as well as for proper tracking of the tuned circuits when several stations are to be received. The coupling condenser, C_2, is a 3–30-mmf compression type trimmer. It is adjusted for maximum volume on local stations or maximum selectivity on distant stations. Imagine a crystal receiver with a selectivity control!!

"FURSCHLUGGINER" MODEL

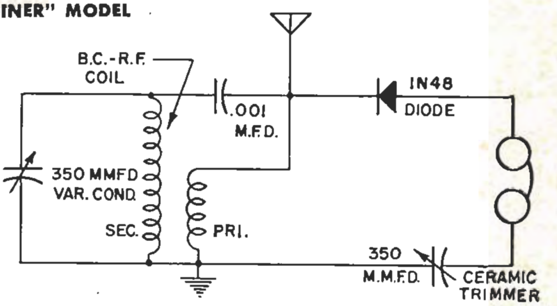

This tricky little circuit was submitted by **Curt Olofsson, W6GTY,** who claims it was designed by a Dr. Smerdschlossenzwiehammerschtenkel. A measure of impedance matching is provided by the 350-mmf ceramic trimmer condenser in series with the 1N48 crystal diode. Curt says this really brings up the signal strength when the set is used with a short antenna (25 to 30 feet). The salvaged broadcast receiver antenna coil shown in the diagram is connected "backwards," with the primary winding in the crystal detector circuit. Modern slug-tuned coils are also suitable, such as the Meissner 14-1026 or 14-1056; or a Miller 6300 or 70-A. W6GTY also recommends that medium impedance earphones (about 2000 ohms) be used in preference to high-impedance types (20,000 ohms). He built this particular model into an old cigar box, but hasn't pulled in Havana yet!!!

"DRINKING GLASS RECEIVER"

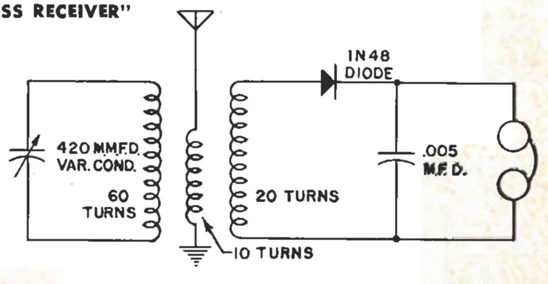

A clever arrangement built around a 2-inch-diameter plastic drinking glass was master-minded by **Jack Lambuth,** an eighth-grade school student who unfortunately did not include his street address with his entry. (Please send it to Lighthouse Larry when you read this so I can send you the award certificate for your $10.00 in G-E Electronic Tubes.) He states that WBAA, Purdue, and WASK, Lafayette, Indiana, are received very well using a 25-foot antenna and his bedspring for a ground! This set is another cigar-box construction job.

The 60-turn close-wound coil of No. 26 DSC wire on the 2-inch form figures out to approximately 140 uh and tunes with a standard single-gang 420-mmf variable condenser. The 10-turn antenna and 20-turn detector coils are wound over the 60-turn coil with a layer of plastic electrician's or scotch tape for insulation. The selectivity of this circuit is also fairly good because the 1N48 crystal diode does not load the tuned circuit heavily.

LOW-PASS AUDIO FILTER

A sharp cut-off low-pass filter is a great help in eliminating the annoyance of heterodynes and noise beyond the range necessary for completely satisfactory 'phone reception. The filter described here is an inexpensive and highly effective weapon in the fight against QRM. Used in the speech system of a transmitter, this filter reduces the spectrum space occupied by the signal, while actually increasing the effectiveness of the transmission. It is connected as shown in Fig. 1.

Because the filter is intended for a variety of applications, a vacuum tube is employed to provide high input and low output impedance. Thus, all the requirements of impedance matching for the passive elements of the filter are satisfied internally and are not disturbed when the filter is interposed between a wide variety of devices.

The design cut-off frequency of the filter pictured on the cover of this issue of G-E HAM NEWS is 3000 CPS, a figure generally considered adequate for voice communication. Design data is given for the prototype low-pass filter in "Thumbnail Theory" for those who want to design their filter for a different cut-off frequency. It is suggested that the 3000 CPS cut-off design be used unless it is certain that a different cut-off point is required for some specific application.

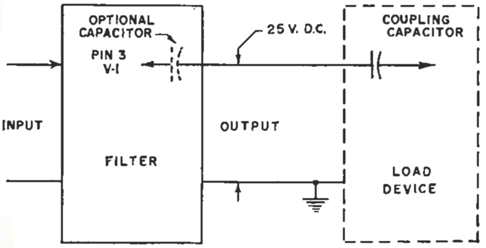

Fig. 1 Diagram for connecting the low-pass filter to the input and load devices.

CONSTRUCTION

The entire filter is housed in a 3 x 4 x 5-inch utility box drilled as shown in Fig. 2. The tube socket, input and output jacks are mounted on one cover. Although the filter elements are not in "cramped" space, a certain amount of clearance is required between coils in different filter sections. The circuit diagram and parts list are shown on page 5.

The six 125-mh coils are mounted on the aluminum brackets shown in Fig. 3 with 6–32 brass machine screws 1 inch long which pass through the centers of the coils. The brackets are then fastened to the 3 x 4-inch ends of the box, as pictured in Fig. 4. Note how L_1 and L_6 are mounted with respect to the other coils. All the wiring between the coils, condensers C_1, C_2, C_3 and the 2400-ohm terminating resistor is done with the covers removed. Attach 4-inch leads to the input end of L_1 and the output end of L_6 for later connection to the tube socket.

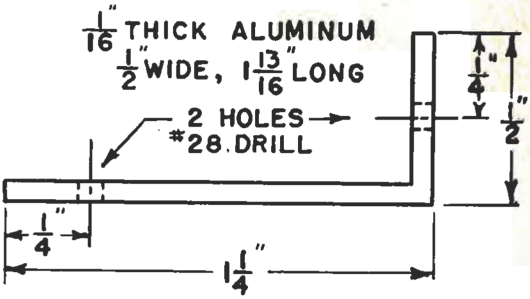

Fig. 3 Mounting brackets for the coils.

The brackets holding L_1 and L_6 should not be securely tightened until after performance tests are completed. Do not rely on the steel box to provide the ground path indicated in the circuit diagram. Instead, run a lead to the grounded ends of C_1, C_2 and R_4, and bring this lead out to the ground points on the top cover. Heater and plate power are supplied through a four-conductor cable anchored to the cover.

TESTS

After a wiring check, heater and plate voltage can be applied. Approximately 25 volts DC should appear across the output resistor. If the correct values of inductors and capacitors have been used, the performance

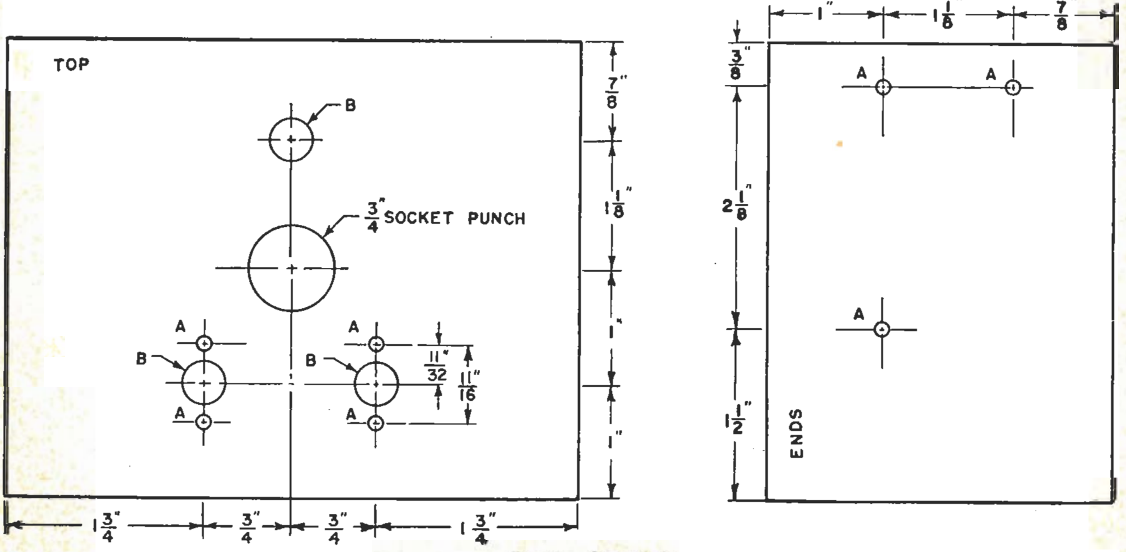

Fig. 2 Chassis drilling layout.

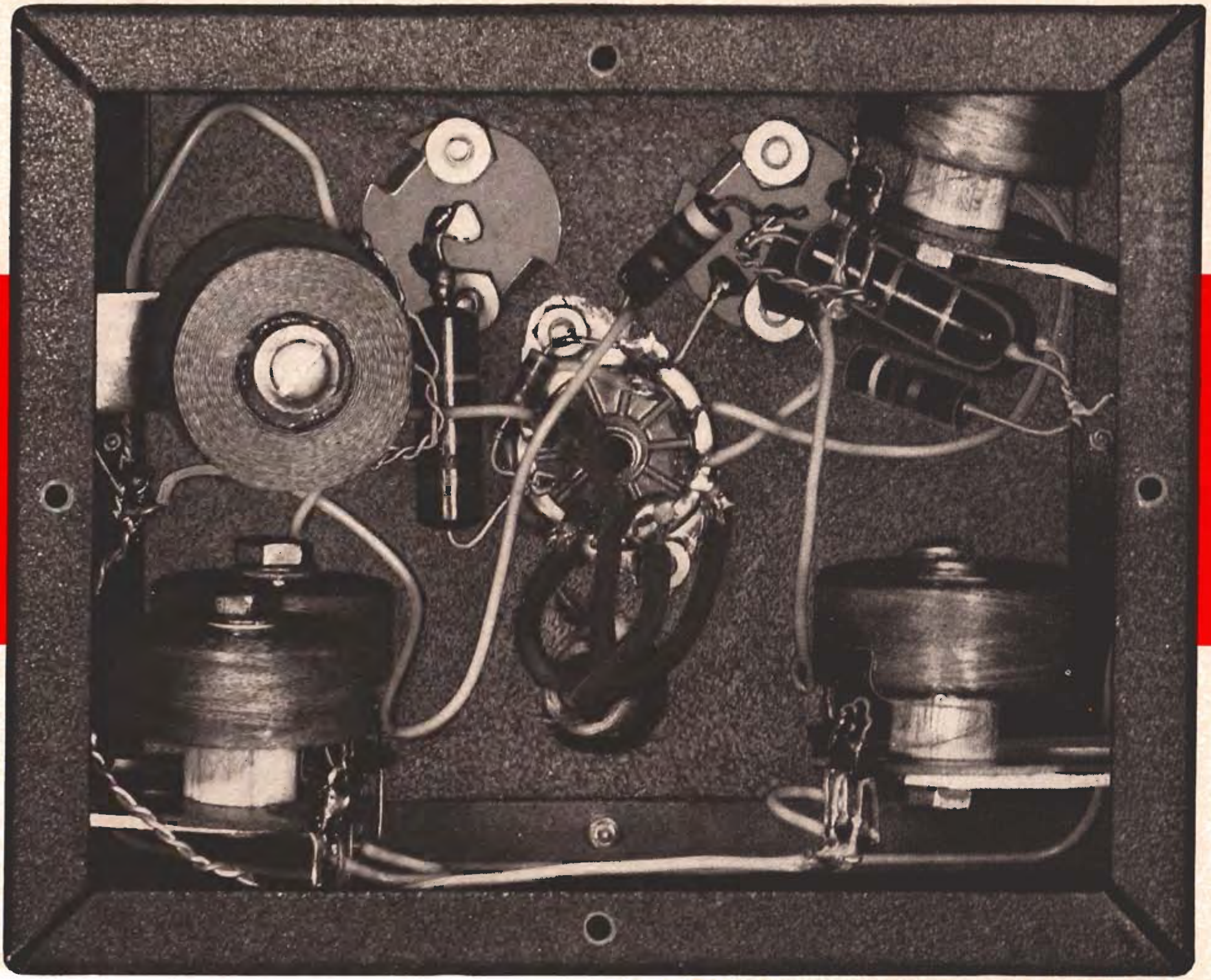

Fig. 4 Bottom view of filter showing socket placed with pins 1 and 9 toward phono jacks. Solder lugs under coil bracket mounting screws are used as ground tie-points for C_1, C_2 and C_3.

Fig. 5 Schematic diagram

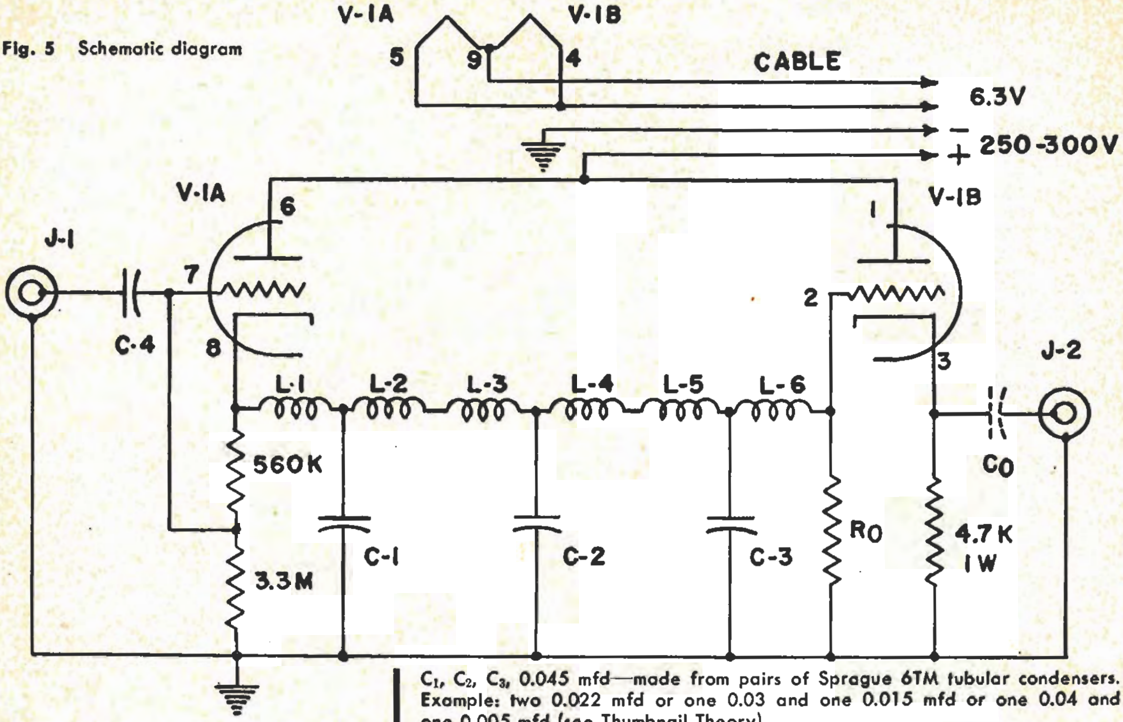

PARTS LIST

C_1, C_2, C_3, 0.045 mfd—made from pairs of Sprague 6TM tubular condensers. Example: two 0.022 mfd or one 0.03 and one 0.015 mfd or one 0.04 and one 0.005 mfd (see Thumbnail Theory).
C_4—0.01 mfd, 600 volts.
C_0—Capacity dependent on load impedance, see text (Application).
J_1, J_2,—Cinch shielded phono jacks.
L_1,—L_6—125 mh RF chokes (Meissner 19-6848).
R_0—2400 ohms, 1 watt ±5%.
V_1—12AT7 tube.
All resistance values in ohms, ½ watt ±20% except as noted. K=1000.

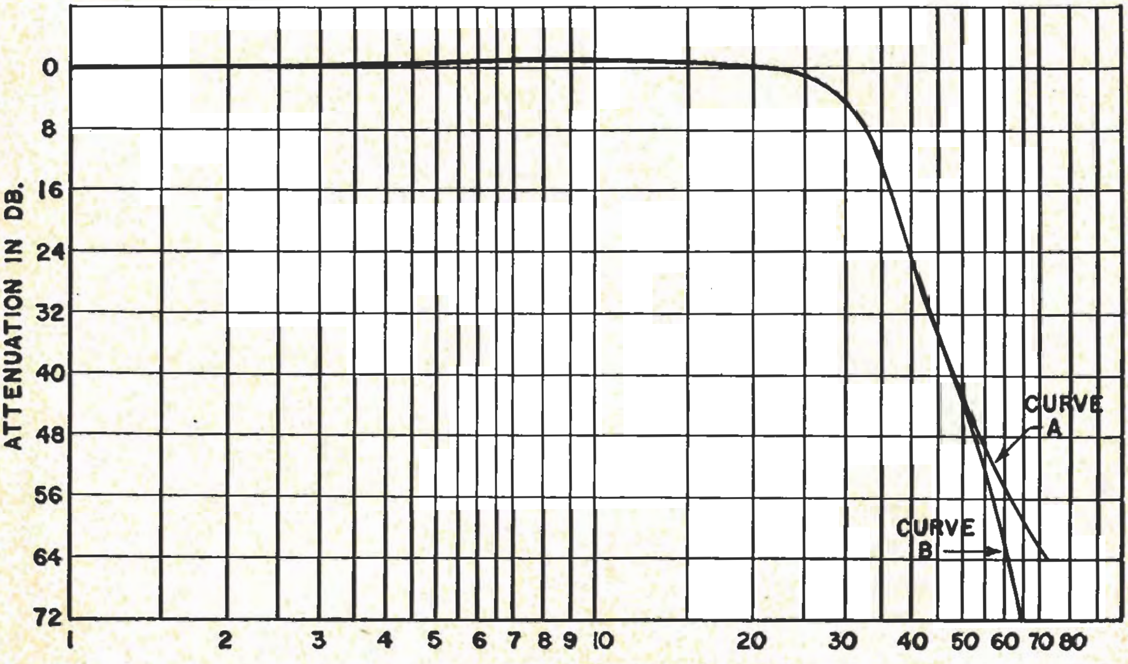

Fig. 6 Response curves with and without coils oriented.

will be that shown by the curve "A" of Fig. 6, at least to an attenuation of 30 db without any further work on your part. Usually an improvement in attenuation at frequencies higher than 4000 CPS can be made by orientation of L_1 and L_6, if suitable measuring equipment is available. Tests made by ear alone are not sufficiently reliable to warrant the effort. A reliably calibrated audio oscillator covering a range from 100 to 10,000 CPS at an output voltage of about 10 volts RMS, and an output indicator covering a range of at least 60 db (1000 to 1 in voltage) are required.

In case orientation of L_1 and L_6 through a few degrees does not allow an attenuation of 60 db or more to be obtained at 6000 CPS, reversal of connections to either L_1 or L_6 (but not both) should allow the performance shown in curve "B" to be equalled or surpassed in the region of high attenuation. The final adjustment of the filter model shown in the illustrations was obtained by setting the test frequency at 7000 CPS and bending the brackets holding L_1 and L_6 for minimum output. Tests with an oscilloscope revealed that the minimum was really a null at 7000 CPS and that the measured output 85 db below the reference level was hum and noise. Beyond 7000 CPS the output rose to about 70 db below reference level and dropped slowly above 10,000 CPS. The insertion loss of this filter is 7 db; that is, the output voltage at 100 CPS is 7 db less than the input voltage. This loss is a consequence mainly of the resistance of the choke coils used.

APPLICATION

The maximum operating level for the filter is 10 volts RMS at the input. Operation at higher levels will introduce distortion due to overloading of the input triode. Practical operating levels will range between 1 and 10 volts. Operation at lower levels will, of course, degrade the signal-to-hum ratio. It will be observed that the hum level in the output is determined by the amount of stray magnetic field in the vicinity of the filter since the coils are not magnetically shielded. A power supply is not included as part of the filter for this reason. Ordinarily, the small amount of heater and plate power required can be borrowed from other apparatus with which the unit is used. If excessive hum is experienced, try moving the filter to a more favorable position, or orienting it for minimum hum pickup.

As a receiving accessory, the filter is inserted in an audio circuit where the operating levels are within range. In most receivers, the output of the first audio stage will provide a suitable signal level for the filter input. When used with the Signal Slicer (G-E HAM NEWS, Volume 6, No. 4) the filter should be inserted between the slicer output and its succeeding audio amplifier. Note that the 4700-ohm output resistor should not be short-circuited by the device into which the filter operates. A coupling capacitor with reactance equal to one-tenth the input impedance of the load at the lowest desired frequency should be provided at the input to any such load (see Fig. 1). Such a capacitor can be incorporated as part of the filter unit to avoid mistakes.

Whether the crystal filter in the receiver is used or not, this filter will improve CW reception somewhat even though the bandwidth is greater than needed for that application. The improvement obtained will depend on the characteristics of the receiver and the particular QRM problem encountered.

For use as a bandwidth control in transmission, the filter is inserted in the audio circuits at a point where the operating levels are suitable. The above precautions regarding the load circuit should be observed. When used in conjunction with the SSB Jr. exciter (G-E HAM NEWS, Volume 5, No. 6) the filter output can connect directly to the audio input jack of the exciter if an 0.01 mfd coupling condenser is inserted in either the filter output or exciter input.

The filter characteristics do not provide for attenuation of low frequencies. Where it is desired to tailor the audio response of the transmitter, this may be done in the circuits either preceding or following the filter. When low-frequency attenuation is introduced after the filter, hum pickup in the filter itself will be attenuated. (See G-E HAM NEWS, Volume 4, No. 4, for simple means of introducing low-frequency attenuation in speech amplifier circuits.)

The "dyed-in-the-wool" experimenter will find many other applications for a handy sharp cut-off filter such as the one described here. Even though the filter is normally used in only one place (say as part of the receiver setup) it will be found convenient to provide input and output jacks so that the device may be patched into other apparatus as the need occurs. In this way a single filter can be made to serve a variety of uses.

THUMBNAIL THEORY

The design of filters can not be covered very thoroughly in a few paragraphs. For those who want some background information on filters the following will be of interest.

The basic filter section used in the device described in this issue is called the "constant K prototype," shown in Fig. 7. Any number of these sections may be joined together for greater attenuation beyond the cut-off frequency. When this is done, the internal sections can be considered as either π or T sections. A multiple section filter is called a "composite" filter. In the ideal case, a constant K filter must be driven by a source having an internal impedance equal to the characteristic impedance of the filter section and the filter must be terminated by the same impedance. Ideally, too, the filter elements should be perfect reactances. Practically speaking, the characteristic impedance varies throughout the pass-band of the filter. Of course, the filter elements do have loss (they are not perfect reactances) so that other considerations

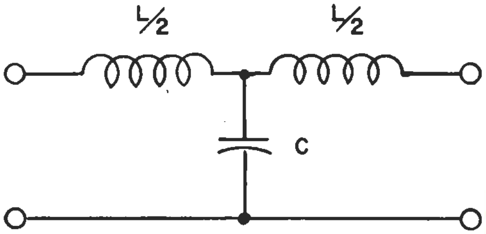

Fig. 7 Above is a T structure filter section. When several T's or π's are joined in a complete filter, the internal sections lose their identity.

Fig. 8 Below is a π structure filter section.

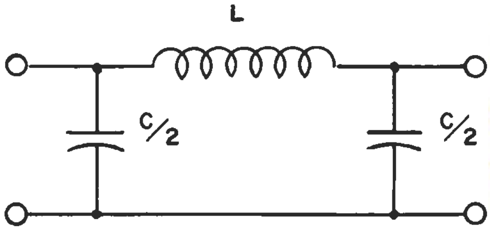

(continued on page 8)

SWEEPING *the* SPECTRUM

Doggone it!—I just get one editor really broken in so that everything here at the G-E HAM NEWS office is running smoothly when he turns around and lands a new job. W2ZBY will be in charge of the Tube Department News Bureau which is now being organized. This new man, W2JZK, looks like a real tough boy to work for. No more "coffee breaks" for me for a while until I get him whittled down to size. Anyway, best wishes for success to W2ZBY in his new venture.

* * *

Our editor is constantly checking with the "unofficial" technical staff here at General Electric to see what interesting gear or subjects they have in mind. These projects are intended to have wide popular appeal. Therefore, each one must be fairly easy to construct using standard manufactured parts unless the performance requirements dictate some special component. We receive letters every day asking when we are going to publish a specific design. Ideas for future issues are largely initiated by such communications, so if you haven't seen what you would like to build in G-E HAM NEWS, write and present your thoughts on the subject.

* * *

THE RADAR MAN

If you should see upon the street
A man who walks with dipole feet,
With a train of little pips behind
He's a radar man with a micro-mind.

With micro-seconds and micro-waves
And micro-volts he fills his days.
And thus in the course of time we find
His brain has shrunk to a micro-mind.

His eyes give out a neon gleam
His ears fan out like a radio beam
As he chews, his molars oscillate
And his heart pumps blood at a video rate.

This man obtains with passing years
Infinite impedance between his ears
And at last he succumbs to a heavy jolt
When he gets what he thinks is a micro-volt.

The doc looks up from his microscope
And says to his nurse, behold this dope.
No trace of a brain cell, can I find
He's a Radar Man with a micro-mind!

—W0PPX in "Ham Hum"
Ak-Sar-Ben—R. C., W0EQU

The G-E HAM NEWS photographer is now out in San Diego County, Calif., getting some pictures of 1954 Edison Radio Amateur Award winner Ben Hamilton, W6VFT, in action at his outstanding civil defense and disaster service installations. Look for them in the next issue of G-E HAM NEWS.

* * *

The Edison Radio Amateur Award judges also named two other nominees, Carl J. Theis, W8BKH, and Carter Rogers, W8NCS, for Special Citation award certificates.

Theis, of Cleveland, Ohio, has received much acclaim for his work of designing, converting and constructing two-way radio equipment from war-surplus command sets for use by missionaries overseas. More rapid communication between isolated missions made possible by these sets was instrumental in summoning life-saving medical aid on several occasions.

When his home town of Richwood, West Virginia, was cut off from the rest of the area by a flash flood and power failure, Rogers was able to enlist the aid of the necessary disaster services through use of a friend's mobile amateur radio station. A more serious threat to the flood-ravaged town was averted through his prompt action.

* * *

One of the complaints our new boss often airs is that his typewriter is old and rickety. (Please note: the typewriter—and only the typewriter—is old and rickety.) It does strange things, this machine. And the latest was to coin a word, "mudulation," which could come into common use on the ham bands. It could be used to describe the system by which all too often we produce a Q 1— R 1 signal!

* * *

About back copies of G-E HAM NEWS . . . We still have available back copies of some issues in sufficient supply to send bulk quantities to clubs or Hamfests. Drop us a note and we'll be glad to send whatever quantity you need as long as the supply lasts.

* * *

The mail basket informs us that somewhere in the land there is an occasional victim of the editorial abbreviation style used in G-E HAM NEWS. Hereafter, the said style will be altered to include the spelling out of abbreviations such as SSB, SSSC, DSRC, etc., the first time they are used in a particular issue. (Sincere apologies to anonymous.)

—Lighthouse Larry

THUMBNAIL THEORY (continued from page 6)

enter into the design of filters. Even when perfect filter elements are assumed, the variation of characteristic impedance within the pass-band presents a problem that is solved partially by more complex circuit arrangements known as "M-derived" filters.

In filter design, as in most things, a compromise must be made between performance and complexity, or cost. In our case, certain liberties were taken with classical filter theory to provide acceptably good performance with basically straightforward and simple circuits. A low source impedance is provided by the cathode follower input arrangement shown in the schematic diagram, while the terminating impedance is a resistor of a constant value. These departures cause minor variations of the attenuation within the pass-band. Fortunately, these variations are partially smoothed out by the loss in the filter coils and the approach to ideal operation is thereby improved. Non-ideal filter elements can be used with considerable saving in cost and a less complex filter arrangement can be built. The loss in the coils accounts for the bulk of the "insertion loss" mentioned earlier. About 2 db of the insertion loss is accounted for by the two tube sections used.

The composite filter in this article comprises three identical T sections joined together. Since a low driving impedance is used, no advantage could be achieved by a π structure. Rather than select a certain characteristic impedance and then prune commercial coils to necessary values in order to provide the desired cut-off frequency, the design equation for inductance *per section* was solved for R_0, the low-frequency characteristic impedance. Thus:

(1) $R_0 = \pi fcL$, where fc is the cut-off frequency and L is twice the inductance value obtainable. When $fc = 3000$ CPS, then $L = 0.25$ henry.

(2) $R_0 = \pi \times 3000 \times 0.25 = 2360$ ohms. Keeping fc at 3000 CPS, and using $R_0 = 2360$ ohms

(3) $C = \dfrac{1}{\pi fcR_0} = \dfrac{1}{\pi \times 3000 \times 2360} = 0.000000045$ farads.

Thus $C = 0.045$ microfarads.

Equations (1) and (3) can be used in designing low-pass filter sections for other cut-off frequencies if desired. A filter is said to "cut-off" when its attenuation reaches 3 db.

The coils used in the sample filter had an inductance value of 0.125 henry each. The measured Q at 1000 CPS was 2.20. The total value of 0.25 henry required per section is twice the value of the individual coils obtainable. The filter capacitors were made up of two selected commercial plastic-encased paper capacitors connected in parallel to provide the calculated value of 0.045 ufd. The individual capacitors were checked for value and paired for as nearly matched composite values as possible, as well as adherence to the design value required.

The sharpness of cut-off obtained with this filter is greater than that indicated by classical filter theory when constant resistive source and load impedances of the value R_0 are used. This greater attenuation is paid for by the irregularities shown between 1000 and 2500 CPS, a really small price indeed. The additional attenuation obtained beyond the 40 db point by coupling between L_1 and L_6 to provide "infinite" attenuation at 7000 CPS serves to increase the slope of the characteristic between 4000 and 7000 CPS at the expense of smaller attenuation beyond about 10,000 CPS. Although this actual difference is measurable, its practical significance for most applications is very small.

—W2KUJ

Electronic
TUBES

G-E HAM NEWS
Available FREE from
G-E Electronic Tube Distributors

published bi-monthly by
TUBE DEPARTMENT
GENERAL ELECTRIC
Schenectady 5, N. Y.
In Canada
Canadian General Electric Co., Ltd.
Toronto, Ontario

E. A. NEAL, W2JZK—EDITOR

Printed in U.S.A.

VOL. 10—NO. 2

MARCH-APRIL, 1955

Electronic
TUBES

G-E HAM NEWS

TUBE DEPARTMENT
GENERAL ELECTRIC
Schenectady 5, N. Y.

MAY–JUNE, 1955

VOL. 10–NO. 3

HAM SHACK INTERCOM

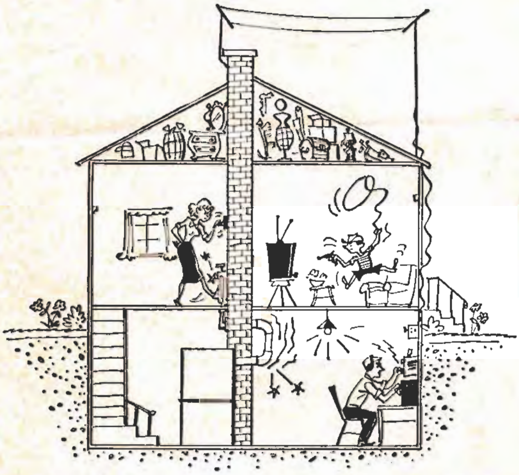

Did you know that pipe-pounding and light-flicking intercom systems are obsolete? Try this efficient, all-electronic model and promote peace with the family.

—*Lighthouse Larry*

CONTENTS

OPERATION CRYSTAL

Checking the operation of this "earphone chassis" model sent me digging into my old junk box to find the necessary material. Out came a plastic-cased earphone instead of the metal one shown in the original model built by Edgar M. Weed, K2BO, of Morris Plains 22, N. J.

A pi from a mangled 2.5 mh RF choke was connected as a self-resonant coil in the illustrated circuit to receive the local broadcast station operating on the 1240 KC *Conelrad* frequency. Another pi may be connected in series with the first for improved results if your local station operates below 1000 KC. For the "last ounce" in volume, a Miller type 70A slug-tuned antenna coil could be used in a large headphone case with the slug adjusted by a screwdriver through a hole in the case.

A "field" test was made by running around the neighborhood clipping the antenna lead onto fences, fire hydrants, unoccupied automobiles, and the like. A weighted length of antenna wire was even tossed over some tree branches with good results. (These tests are best made at night unless you want to convince your already skeptical neighbors that their favorite radio amateur has gone completely crazy!)

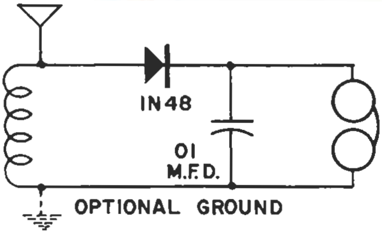

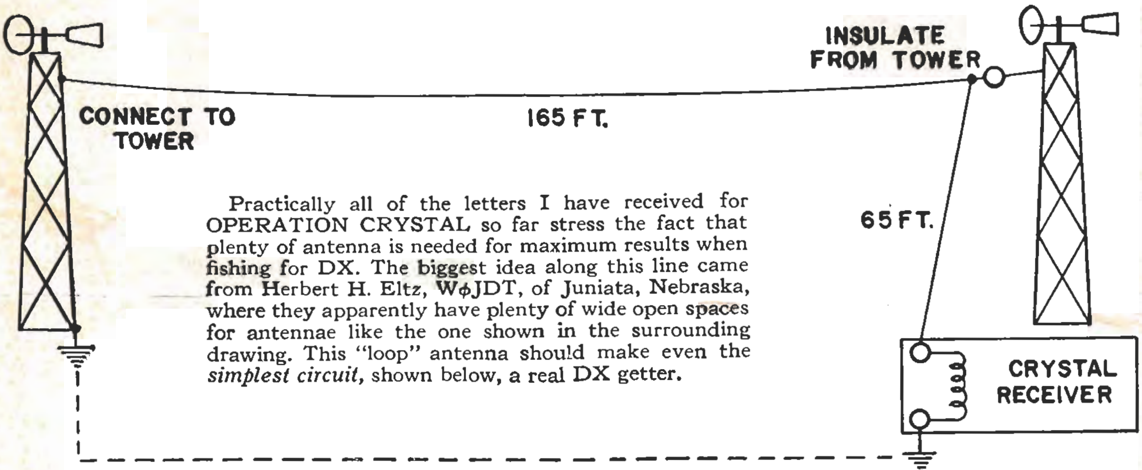

Practically all of the letters I have received for OPERATION CRYSTAL so far stress the fact that plenty of antenna is needed for maximum results when fishing for DX. The biggest idea along this line came from Herbert H. Eltz, WφJDT, of Juniata, Nebraska, where they apparently have plenty of wide open spaces for antennae like the one shown in the surrounding drawing. This "loop" antenna should make even the *simplest circuit*, shown below, a real DX getter.

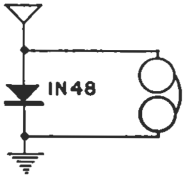

This set makes up in volume and simplicity what it lacks in selectivity, according to tests run at my shack. The strongest local station will be the one that wins at the earphones. In some locations a mixture of stations will result, but that should be no problem when receiving *Conelrad*. Polarity of the crystal seems to be unimportant. Although several persons submitted this idea, Jerry Lucha, of Wilmington, Delaware, sent the first such entry to be received at my office.

All ideas submitted before December 1, 1955, will be eligible for publication in the OPERATION CRYSTAL column. (See G-E HAM NEWS, Volume 10, No. 1.) Do not send in your model! Construction and antenna hints of an outstanding nature are also eligible. All material submitted must be free of patent restrictions and becomes the property of G-E HAM NEWS.

—*Danny Diode*

HAM SHACK INTERCOM

What's so unusual about an inter-com system? The control circuits of this G-E HAM NEWS model are designed specifically with the "hermit" type of radio shack in mind—a good nickname for most home stations located in attics, upstairs rooms, cellars, or even an actual shack in the yard. When installed in the radio shack, rapid temper-saving communication is available to the front and rear doors, kitchen, nursery, or what-have-you. It will replace, at nominal cost, the more conventional systems of signalling the "chief op'." Banging on the floor, ceiling and plumbing, or flicking the cellar or attic light on and off would no longer be in vogue. It is also a handy gadget to have for communication between tents at the radio club's annual Field Day station.

For the "occasional" 'phone man, it could be used as a speech amplifier to drive the grid of a "clamp" tube on the screen of that tetrode final amplifier even while it is also on duty in its intended role. One position of the master station selector switch could be reserved for this application.

As a general-purpose audio amplifier, it is even handy for checking the output of the Jr. op's crystal receiver. When the XYL sees how much fun you are having with it, she is sure to want a master station for the kitchen. Keep that in mind when scrounging for the parts.

Two types of construction, rack panel and table cabinet, are described to show how the master station could fit into most styles of ham shack arrangement.

CONTROL CIRCUITS

As shown in Fig. 1, the 3PDT relay and the station selector switch, S_2, form the heart of a control system that allows the master station amplifier to be activated from any remote station simply by pressing switch S_4, to the "talk" position. This grounds one side of the heater winding and energizes the relay. A ground path provided by one relay contact then acts as a "holding" switch for the relay coil current. Heater and plate power are applied through the other two normally open contacts. The amplifier is turned off by pressing S_5, on the master station, to remove the relay coil power. The heater current must be isolated from the relay-closing circuit, otherwise the extra voltage drop through the external cable would affect the relay operation.

Up to four remote stations can be selected by S_2, the fifth position connecting all stations at once. Any remote station can call into the master station, regardless of the setting of S_2, when S_4 is in the "talk" position. The remote station signal then goes directly to the input of the amplifier whenever S_1 is in the "listen" position.

If only the master and one remote station are needed, S_2 and its associated wiring and terminal strips enclosed in the dotted lines on the diagram will not be necessary. Further simplification is possible by eliminating the control relay, if the amplifier runs continuously.

Inexpensive four-wire TV antenna rotator control cable is used to connect the master and remote stations when the complete control system is desired. The rotator cable is flat in cross-section and can easily be run around door and window casings, behind moldings and base-boards, under rugs or even fished through walls, if you are the ambitious type of person. Two or three-wire cable may be used with the simplified circuit.

AMPLIFIER CIRCUIT

A three-stage audio amplifier circuit is used, with the input signal from the speaker-microphones fed into one cathode of a 12AX7 twin-triode. This grounded-grid input circuit has less gain than conventional types, but eliminates the input matching transformer which would otherwise be necessary. Sufficient output at only 110 plate volts is possible with the new 6CA5 beam-pentode tube in the power output stage. (See G-E HAM NEWS, Volume 10, No. 1, for ratings and description.) The coupling, cathode by-pass and shunting condensers are tailored to attenuate frequencies outside the normal speech range, reducing any stray hum pickup by the remote station cables. (See G-E HAM NEWS, Volume 4, No. 4, for details.)

Expensive instant-heating type tubes were deemed unnecessary because the amplifier was found to be capable of passing a signal about 8 seconds after the relay was energized.

A transformer-powered, half-wave, selenium-rectifier plate supply with an RC filter is used to minimize the shock hazard always possible with transformerless type supplies. This also simplifies the tube heater and relay power problem. The power transformer, T_1, runs all the time that the power switch, S_3, on the volume control shaft is "on." After running several hours in the stand-by position, the transformer was barely warm. The built-in power supply can be eliminated if a similar source is available in the shack.

Standard 3.2-ohm voice-coil PM speakers could be used in place of the 45-ohm types designed especially for inter-com service if each remote station does not require over 25 feet of connecting cable. Savings in original cost would be about fifty cents per speaker.

CONSTRUCTION

All new parts were used in the model stations, but either one could be built around a "defunct" table radio chassis and cabinet. The amplifier and power supply is built on a Bud CB-1620 miniature open-end aluminum chassis drilled according to Fig. 2. All parts are arranged so that the same chassis can be mounted vertically in either a 6 x 9 x 5-inch metal utility box, or on a 5¼-inch wide relay rack panel. Station selector switch, S_2, and the volume control, R_5, mount with the shafts projecting through the underside of the chassis. Five 3-terminal tie-points are fastened under the chassis at the places shown in the bottom view, Fig. 3, when the transformers and sockets are assembled with 6–32 x ¼-inch and 4–40 x ¼-inch machine screws. Soldering lugs are also placed on these screws for ground tie-points. Rubber grommets are used in the six ⅜-inch diameter holes marked "D" where leads from the transformers, switches and volume control pass through the chassis.

All wiring is done with conventional colored hook-up wire, as no shielded leads were found necessary. The wires to the speaker, S_1, S_5 and the pilot-light bracket are left a few inches longer than necessary. These parts are then fastened to the panel, drilled as shown in Fig. 4, before the chassis is assembled with ¾-inch long tubular metal spacers between the bottom lip of the chassis and the panel. Note that blank spaces are left under the chassis where the panel-mounted parts are located. As the power relay mounts on the bottom of the box next to the chassis, connections made to it were left slightly long and then laced together. Small rubber feet, ⅜-inches in diameter, fastened on the bottom of the cabinet, provide clearance for the relay mounting screw-heads. The terminal strips for connecting to the remote stations were mounted directly on the back of the cabinet. Leads from the strips to S_2 and the relay are made long enough to allow the back to be opened with the chassis in place.

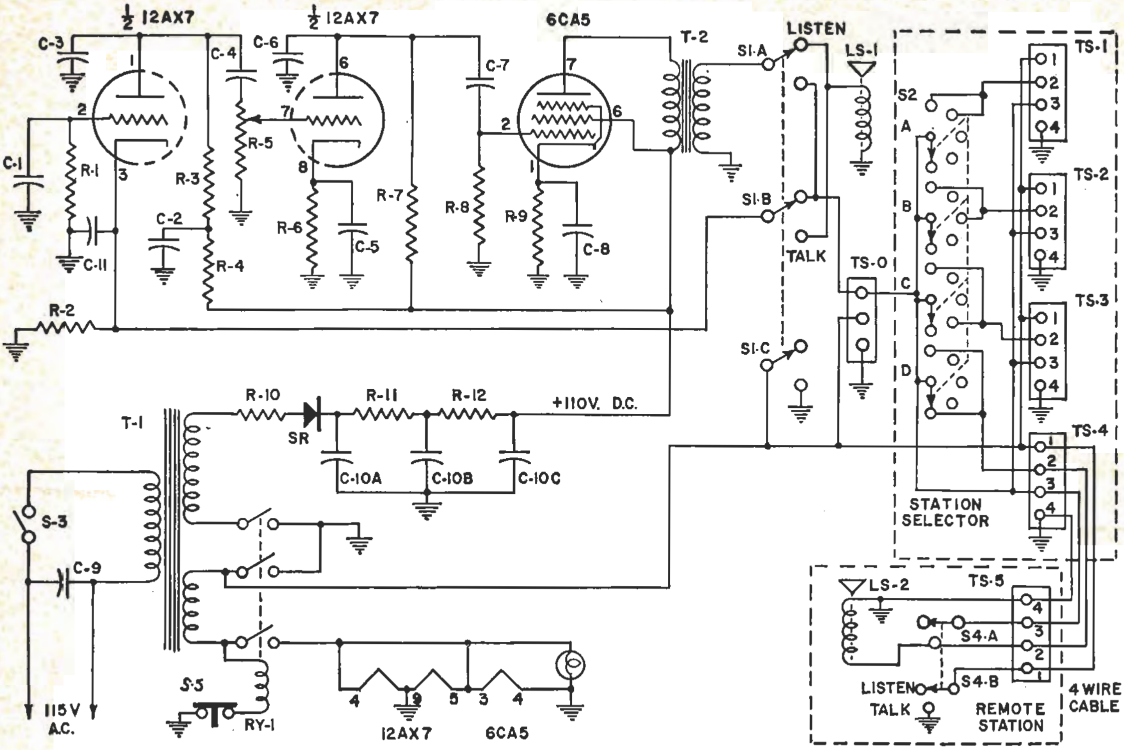

Fig. 1 Schematic diagram

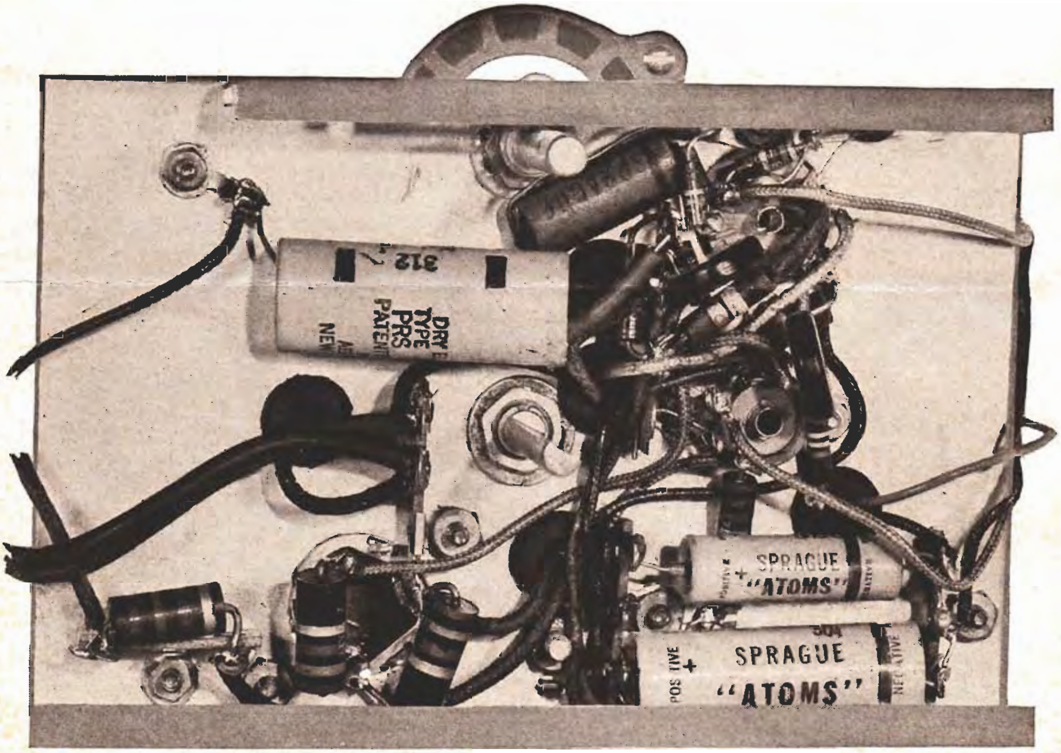

Fig. 3 Chassis bottom view

"A" drill—No. 32 spaced to suit tube sockets.
"B" drill—No. 26 through both chassis and bottom lip.
"C" drill—No. 26 for T_2 at left, T_1 at right, C_{10} at ⅞-inch hole and rectifier at bottom center.
"D" drill—⅜-in. dia for rubber grommets.
"E" drill—⅜-in. dia for R_5 and S_2.

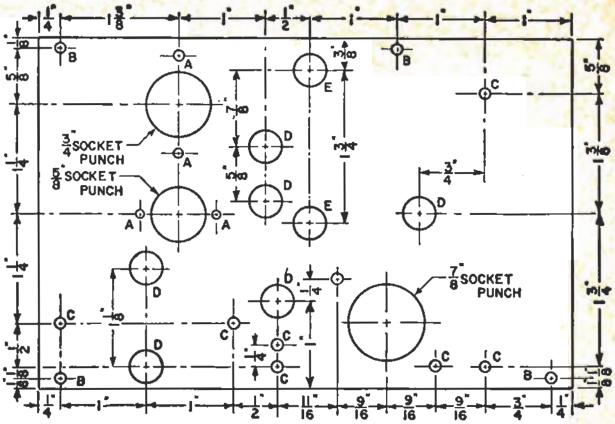

Fig. 2 Chassis drilling layout (top view)

PARTS LIST

C_1—0.1-mfd, 200-volt paper.
C_2—10-mfd, 150-volt miniature electrolytic.
C_3, C_6—500-mmf, 500-volt disc ceramic.
C_4, C_7—2000-mmf, 500-volt disc ceramic.
C_5—10-mfd, 50-volt miniature electrolytic.
C_8—50-mfd, 50-volt miniature electrolytic.
C_9—0.05-mfd, 600-volt paper.
$C_{10a,b,c}$—Three-section, 40-mfd, 150-volt electrolytic, "twist-lock" type not over 3 inches high.
C_{11}—5000-mmf, 500-volt disc ceramic.
I_1—½-inch jeweled pilot light and bracket.
LS_1, LS_2—4-inch PM speakers, 45-ohm voice coils (QUAM 4AO7Z45 or similar).
R_1—10-megohm, ½-watt.
R_2—470-ohm, ½-watt.
R_3, R_7—0.1-megohm, ½-watt.
R_4, R_6—2200-ohm, 1-watt.
R_5—0.25-megohm potentiometer with SPST switch.
R_8—0.24-megohm, ½-watt.
R_9—120-ohm, 1-watt.
R_{10}—100-ohm, 2-watt.
R_{11}, R_{12}—180-ohm, 2-watt.
RY_1—3PDT, 6-volt AC coil relay (Potter & Brumfield KR-14A 6-volt AC coil).
S_1—4-pole, 2-position, non-shorting, spring return lever switch.
S_2—4-pole, 5-position, shorting rotary switch.
S_3—SPST switch on back of potentiometer R_5.
S_4—2-pole, 2-position, non-shorting, spring return lever switch.
S_5—SPST, normally closed push-button switch.
SR—130-volt, 75 ma, half-wave selenium rectifier.
T_1—Half-wave power transformer, 125 volts @ 50 ma, 6.3 volts @ 2 amp. secondaries.
T_2—4-watt universal output transformer, connected to match speakers used.
TS_{1-5}—4-terminal and lug phenolic strips.
TS_0—optional strip when S_2 is not needed.
Dial plates: (1) 5-position tap switch plate (Mallory No. 375).
(1) OFF and10-position volume control plate (Mallory No. 390).
(2) Single gang lever-switch plates (Centralab P-1755).

The above description also applies if the chassis will be housed in a small table radio cabinet, except that small blocks of ¾-inch thick white-pine are glued to the inside of the panel and 1½-inch long wood screws fasten the chassis to the blocks from the rear. A back cover of ⅛-inch thick tempered hard-board with the terminal strips mounted on it is then fashioned.

RELAY RACK MODEL

The amplifier chassis bolts directly to the rear of the relay rack panel, with the control shafts located about 2 inches off-center. The lower edge of the chassis comes flush with the same edge of the panel. The speaker, S_1, S_5, power relay and pilot-light bracket are fastened to unused portions of the panel either side of the chassis. The speaker is centered about 4 inches from one end of the panel and the relay positioned next to it. The pilot-light bracket and S_5 are located in line with the control shafts between the chassis and relay. Talk-listen switch, S_1, mounts about 1 inch from the other end of the chassis. Ornamental-head screws are used wherever the heads show on the front of the panel.

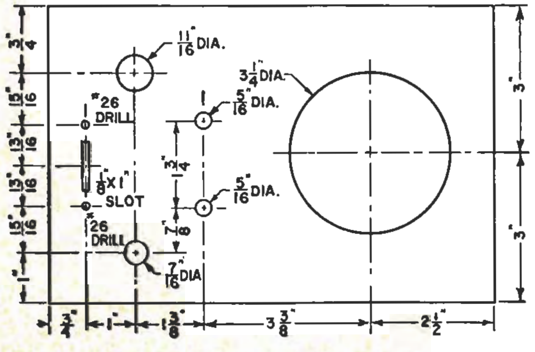

Fig. 4 Panel drilling layout for cabinet model

A decorative pattern of holes drilled through the panel can be used as a speaker grille, or a small piece of "do-it-yourself" perforated aluminum sheet can be used between the speaker and a 3¼-inch diameter hole bored through the panel. A "dished" effect was obtained by gently tapping the sheet with an object slightly smaller than the hole. Standard lever and rotary switch plates identify the various controls.

The terminal strips were mounted on a small piece of hard-board and fastened to a pair of small angle brackets assembled under the chassis mounting screws.

REMOTE STATIONS

A Bud CS-1948 4-inch metal speaker cabinet houses each remote speaker and the call-in switch, S_4. A Cinch-Jones No. 17-4 terminal strip for the external cable is mounted on the back of the box with 6–32 x ¼-inch machine screws. Note that the cabinet is grounded to the terminal strip.

Many other possible uses will probably occur that have not been mentioned in this description, although our few examples show that an inter-com system is a necessity in many amateur radio installations.

1954 EDISON AMATEUR RADIO AWARD WINNER

Judges:

Val Peterson, Administrator, FCDA
E. Roland Harriman, President, Red Cross
Edward M. Webster, Commissioner, FCC
Goodwin L. Dosland, President, ARRL

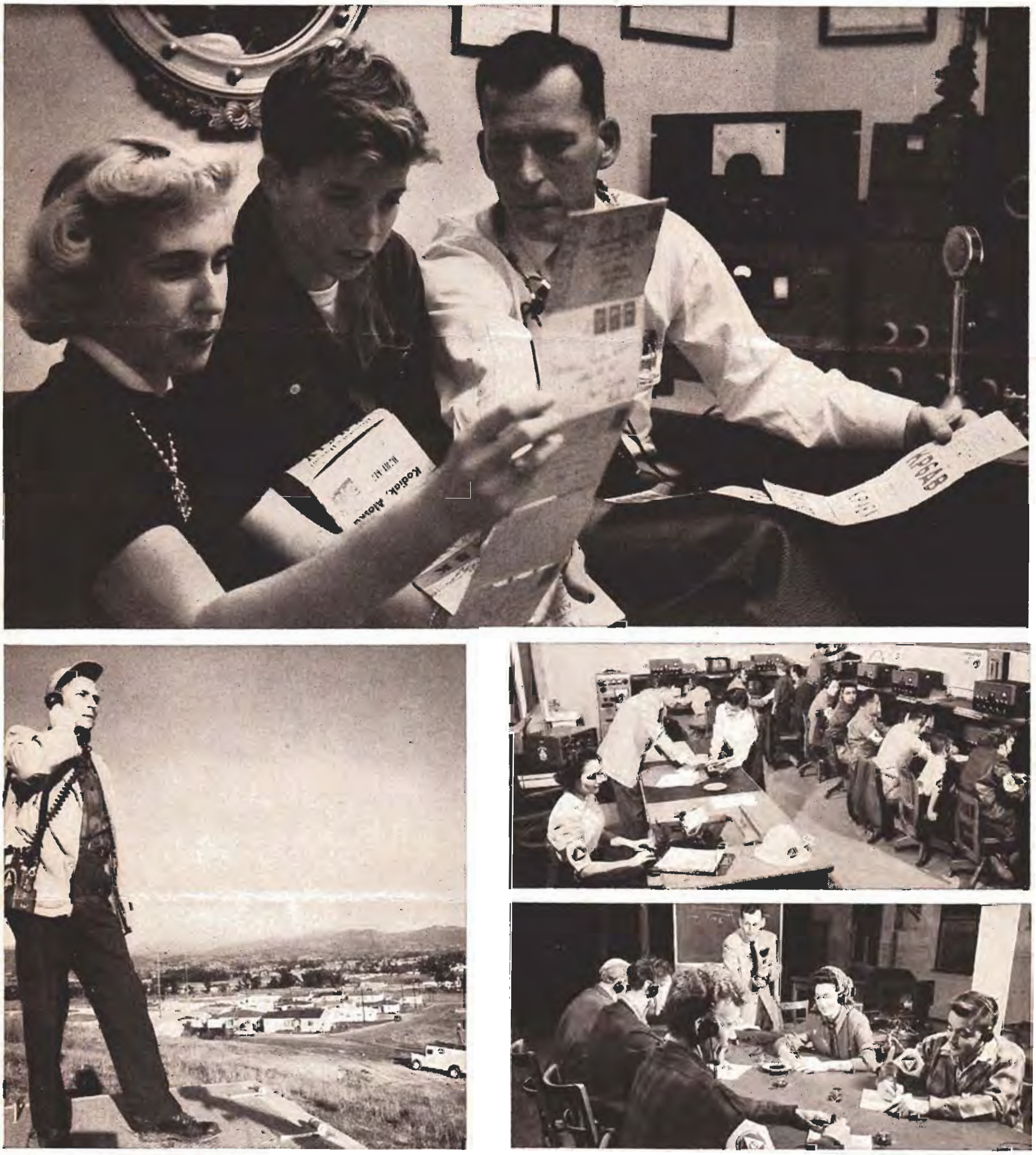

Ben Hamilton, W6VFT, shown with XYL Flora Mae and son Richard at his La Mesa, Calif., home station (top), catches a moment's relaxation from activities which consume more than 20 hours weekly in addition to his career as industrial electronics instructor at San Diego Junior College and Vocational School. The Civil Defense control center (upper right) co-ordinates operation of nets for CD, Zone Warden, Red Cross disaster service, county road service, and AREC in 36 of 44 communities in 60 by 70-mile San Diego County. Four bands are used to insure adequate coverage of rugged mountains, coastal, and desert terrain (bottom left). His program of network planning; specifying, installing and maintaining equipment; personnel alerting system, and classwork training of operators (lower right) has given his 750,000 neighbors one of the best such services in the nation.

Ben is communications chairman for the Red Cross chapter, SCM for ARRL, communications officer in the 40th Division of the California National Guard, and is a veteran of World War II and the Korean War.

SWEEPING *the* SPECTRUM

All the recent activity in the transistor field has touched off a couple of interesting programs on that subject at one of the local radio clubs, remarks our editor . . . who is keeping an eye out for some good transistor ham gear ideas. Most good-sized cities must have either a manufacturer or user of transistors who might supply someone well-versed in the subject to act as a club program speaker. The subject is probably too extensive to cover in one program—fundamentals could be handled in one session, and applications in another. Primary amateur interest would naturally be in the portable and miniature equipment field.

* * *

I caught our editor taking a peek at the scene of the first live closed-circuit telecast ever made to an I.R.E. Convention on March 22nd here at the Power Tube Plant of General Electric in Schenectady, even though it took place after normal working hours. He also dug up the information that the show was the first inter-city live closed-circuit telecast participated in by General Electric.

Manufacturing techniques on a new line of metal-ceramic UHF Special Purpose and Transmitting tubes were shown to a private audience in the West Ballroom of the Waldorf-Astoria Hotel in New York City, 170 miles away. Particularly impressive was a demonstration showing a ceramic tube envelope withstanding heat from a gas-torch that reduced a similar glass envelope to a shapeless molten mass. "Star" of the show was the new GL-6442 UHF Lighthouse triode, utilizing 61 component parts assembled in 164 precision mechanically controlled operations which factor out heavy reliance on operator skill. Power inputs of 12 watts at 350 plate volts in a class C CW amplifier or oscillator at frequencies up to 2500 MC are possible in grounded-grid cavity circuits. As a plate-pulsed oscillator, it may be used up to 4000 MC at 3000 positive peak plate volts. Short electron transit time, low lead inductance and interelectrode capacities and excellent isolation of the anode from the cathode allow efficient operation at these frequencies.

* * *

From a recent issue of the Suburban Radio Club, Ferguson, Missouri, bulletin comes word of this novel use of a grid-dip oscillator.

A general contractor directed scathing imprecations at the carpenters, electricians and others of the construction crew whom he condemned individually and collectively for the delays and troubles which, he roared, were ruining him. If he could only get a little money ahead he would quit this losing game, etc. No more custom home construction jobs for him!

"How in blue blazes are we going to find the electric outlets that those plasterers buried so thoroughly and now have been tiled over in the kitchen? Who is going to pay for chopping up these walls?"

An electrician, also a radio ham, then advanced, "I'll bet coffee against your coffee and doughnuts that a good radio man could spot them within two inches without even scratching the paint."

"All right, it's a deal," said the contractor. "I will give you five minutes a plug, but heaven help you if you are giving me a wrong steer."

It was a curious group that gathered around as *you know who* coupled his grid-dip meter to one of the lines in an exposed socket and picked up the signal on his little wave-meter which in turn was plugged into a large volt-ohm meter. With the aid of the swinging needle, he followed the invisible wires up the wall, across the ceiling and down the outer wall. The carpenter drove his chisel through at the indicated spot, right in the middle of an outlet box, of course. The others were uncovered in rapid succession, and once again pure genius brought home the coffee and doughnuts.

The frequency? This, our hero refused to divulge, but the real mystery seems to be: How did that grid-dip meter, wavemeter and multi-meter just happen to be so handy?

* * *

Although operation of a mobile radio station by the driver of a motor vehicle is illegal in many states, the Egyptian Radio Club of Granite City, Illinois, has established a class to teach members how to drive an automobile while talking into a microphone.

The club has set up an obstacle course on "the south ten acres" of their club grounds which duplicates the conditions encountered in city driving—rough streets, traffic snarls, baby buggies and police patrol cars. Several members have "donated" the use of their cars to simulate heavy traffic similar to that encountered while mobiling.

A beginner in the course is equipped with a chest microphone, which is used for the first three lessons, or until he shows aptitude for further learning. After the student becomes accustomed to the feel of the "mike" at his nose, a regular hand-held microphone is substituted. The instruction committee guarantees that an ERC-trained ham can talk on the mobile wireless and drive anywhere! Yes, anywhere!

In spite of such educational efforts, undoubtedly the safest and best course of action is to refrain from operating a mobile rig while actually moving, or in stop-and-go traffic. This is particularly important where a hand-held microphone is used or while attempting to tune the mobile installation. Even a minor accident, which involves no injuries, resulting from these distractions would be bad public relations for amateur radio. Also, the outcome of any civil action could be influenced by the fact that one of the parties involved did not give driving his undivided attention.

—*Lighthouse Larry*

essential characteristics handbook

Look for the cover pictured at the right on the counter of your local G-E Tube Distributor, who should now have his copies of the new, completely revised, G-E Receiving Tube Essential Characteristics Handbook. Latest information on over 100 new miniature, sub-miniature, series-string, special purpose and television picture tubes, plus a separate section on germanium diodes, is packed into a compact 6 x 8½-inch size. A multi-ring binder allows the book to stay open and lie flat at any page. The type style used shows at a glance whether a tube is miniature, glass or metal. A bonus feature is the printing of the base diagram on the same page as the tube listing—no tedious thumbing back and forth for this information.

Function, maximum ratings, and typical operating conditions of over 1700 tube types are listed clearly. Outline drawings with dimensions allow you to determine whether or not that 5-tube receiver will fit into your favorite-brand coffee can. A section with circuit diagrams for most typical receiving tube applications brings up the rear.

Do not write to Lighthouse Larry for your copy! They are available only through authorized G-E Tube Distributors.

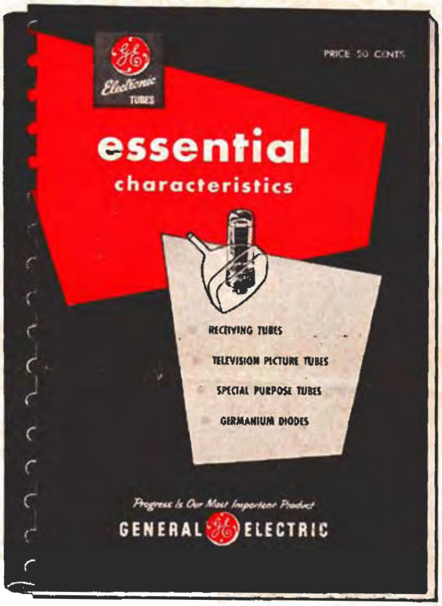

Electronic
TUBES

G-E HAM NEWS

Available FREE from

G-E Electronic Tube Distributors

Printed in U.S.A.

VOL. 10—NO. 3

published bi-monthly by

TUBE DEPARTMENT

GENERAL ELECTRIC

Schenectady 5, N. Y.

In Canada
Canadian General Electric Co., Ltd.
Toronto, Ontario

E. A. NEAL, W2JZK—EDITOR

MAY-JUNE, 1955

Electronic
TUBES

G-E HAM NEWS

TUBE DEPARTMENT
GENERAL ELECTRIC
Schenectady 5, N. Y.

JULY–AUGUST, 1955

VOL. 10–NO. 4

A 6-METER SPECTACULAR—Part I

"TECHNICIANS' DELIGHT" TRANSCEIVER

Part I is a complete 6-meter station in one package from the bench of W2GYV that features a simple six-tube circuit, 4.5 MC fixed-frequency superregenerative detector, speaker doubling as a microphone and a novel "pi-network" overtone oscillator circuit. The next issue will feature Part II, the "Simple-sixer Serious Converter"; and the November–December issue will present Part III, the "Bonus 100-watt Transmitter."

—*Lighthouse Larry*

CONTENTS

OPERATION CRYSTAL

Have you ever wondered how more than one germanium diode would work in a crystal receiver. Well, I found out when tests were made on these entries I received recently. Fig. 1 is a full-wave detector using a split coil and a 2-section tuning capacitor, which can be any old broadcast type ranging from about 10 to 400 mmf. L_1 is 45 turns of No. 32 insulated wire wound in the middle of a 6-inch long, 1¼-inch diameter form. L_2 and L_3 each have 140 turns wound either side and spaced ⅛ inch from L_1. All coils are wound in the same direction. The series antenna capacitors, C_1, a 15–400-mmf variable, and C_3, a 500-mmf fixed, help resonate most any antenna and ground system. Les Trude, W2GXV, of Clyde, N. Y., submitted the first of several full-wave circuits received.

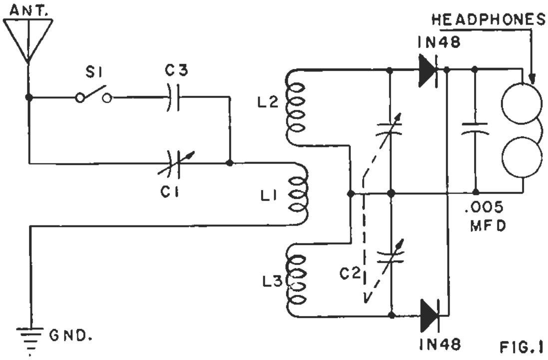

FIG. 1

The circuit shown below makes use of a bridge-type detector circuit which, when tested, showed greater selectivity than a single crystal connected across the same tuned circuit. The audio output voltage was about the same for either detector. The selectivity becomes greater and sensitivity decreases as the spacing between the coils is increased. The two vari-loop sticks may be placed either end to end or parallel with about ½-inch spacing center to center. J. L. Knaus of Glassport, Pa., submitted this circuit.

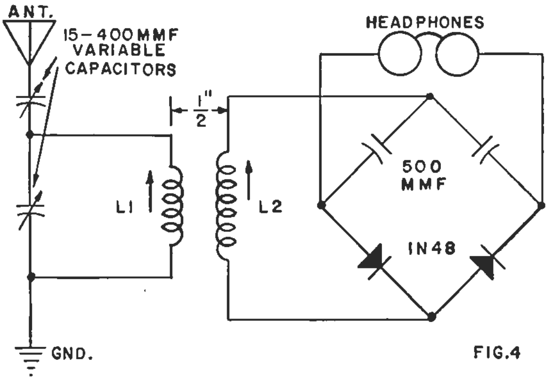

FIG. 4

The simplest two-crystal circuit I have received came from R. J. Baker, W8JIA, North Industry, Ohio. Several of the local hams glanced at the circuit and told me, "Impossible!! There's no ground return path." So, try it yourself. It only takes a couple minutes. If you have more than one local broadcast station, the optional tuned circuit will help separate them. Even in the form shown in the solid lines in Fig. 2, high output was obtained with only a few feet of wire for an antenna.

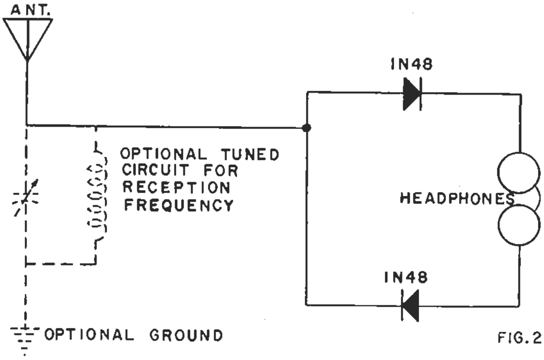

FIG. 2

W8JIA also submitted a design with one crystal and high selectivity, shown in Fig. 3. The coils are wound on a G-E tube carton $1\frac{9}{16}$-inches square. L_1 is 50 turns of No. 26 wire, L_2 is 25 turns spaced ⅛ inch from L_1 and L_3 is 60 turns spaced ⅛ inch from L_2. All the variable capacitors are separate—and for simplicity the two in the antenna circuit could be the mica-padding type.

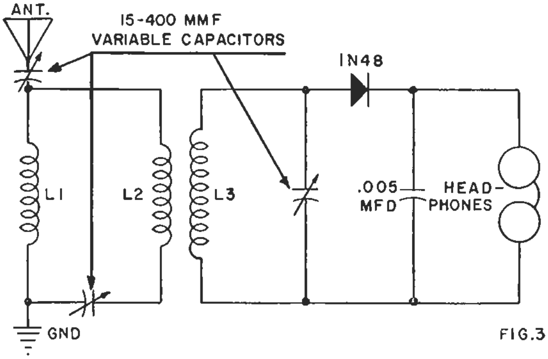

FIG. 3

All ideas submitted before December 1, 1955, will be eligible for publication in the OPERATION CRYSTAL Column. (See G-E HAM NEWS, Volume 10, No. 1.) Do not send in your model! Submitters of the three ideas published in each issue receive certificates for $10 in G-E Electronic Tubes. Be sure to give complete coil-winding data for home-wound coils. All material submitted must be free from patent restrictions and becomes the property of G-E HAM NEWS.

—*Danny Diode*

"TECHNICIANS' DELIGHT"

TRANSCEIVER

This simple transceiver has many possibilities as a general-purpose 6-meter rig for Technician class amateur radio licensees who want to take advantage of their recently-granted privileges on this band. It should particularly interest those who have no regular station receiver into which a converter may be used.

The original idea was that a few of the local gang wanted to build these units and leave them running all the time for a little private communications network. When the first model was tested, the receiver sensitivity was well above expectations—and the rig seemed to be a *natural* for the above-mentioned purpose.

The reliable working range between two of these units over fairly level terrain using a simple ground-plane antenna at roof-top height seems to be ten to fifteen miles. This set would also be useful for CD communications installations located where only one two-way radio unit is needed. As the power requirements were tailored to fit the popular 300-volt, 100-milliampere vibrator-type plate supply, it will run for many hours on one "filling" of a storage battery. The heater power requirement is only 2.4 amperes at 6.3 volts. Total plate power drain at 300 volts is 50 ma on the "receive" position and 100 ma on the "transmit" position. The high efficiency G-E HAM NEWS Mobile Portable Power Supply described in Volume 8, No. 2, would be ideal for powering this rig from 6 volts.

RECEIVER CIRCUIT

The schematic diagram, Fig. 1, shows that only six tubes are required for this transceiver, with the audio section serving a dual role as plate modulator and receiver audio amplifier. The receiver section uses a 12AT7 mixer-oscillator with the IF output at 4.5 megacycles. The high frequency oscillator tunes on the low side of the 50 to 54 megacycle signal frequency to minimize image difficulties in areas where TV channel 2 is in use. Mixer grid circuit tuning capacitor (C_1) was not ganged to oscillator capacitor (C_3) to eliminate tracking problems. Normally, C_1 will only have to be touched when more than a half megacycle frequency change is made in the oscillator tuning.

A standard 4.5 megacycle television sound discriminator transformer couples into a fixed-frequency superregenerative detector. This circuit will be remembered by many old-timers as being notorious for radiation of "squeals" and a lack of selectivity when operated at a VHF signal frequency. Working it at 4.5 megacycles and isolating this circuit from the antenna overcomes these disadvantages. The desirable properties of good sensitivity, ignition noise rejection and inherent AVC action make possible a good performing but simple receiver circuit.

For the information of "new-timers," this detector is simply an oscillator at 4.5 megacycles in which the values of the grid resistor and capacitor have been increased to the point where a "squegging" action, or second oscillation takes place simultaneously about 20 KC. The grid capacitor accumulates a high negative charge which decreases at a slow rate through the high value grid resistor, varying the oscillator's operating point. In a normal regenerative detector, further amplification ceases when oscillations commence. The superregenerative detector can oscillate at the signal frequency only when this negative grid charge decreases to the point where the grid is no longer biased beyond cutoff. Thus, the regeneration can be greatly increased with a large amount of amplification resulting.

One half of another 12AT7 handles this function, the second section being used as an audio voltage amplifier. A 6V6 beam-pentode audio output stage provides plenty of drive for the 45-ohm voice coil, 3½-inch PM speaker.

TRANSMITTER CIRCUIT

The transmitter section uses a third 12AT7 as an overtone crystal oscillator and frequency doubler. Novel use of a pi-network tank circuit is made to provide feedback for encouraging third-overtone operation of any crystal ground for fundamental operation between 8334 and 9000 KC.

Variable air capacitor C_5 tunes the network to the 25 megacycle output frequency and mica padder capacitor C_4 allows easy and precise adjustment of the proper amount of feedback necessary for overtone output from highly active or extremely sluggish crystals. Tests indicate that this circuit is much simpler to adjust than more conventional types in which juggling a coil-tap or separate feedback coil is required. Feedback is at a minimum when this padder is at maximum capacity.

The other half of this 12AT7 in a conventional frequency doubler provides about 3 ma grid current for the 5763 Class C power amplifier.

Another pi-network tank circuit is used for the amplifier output, to simplify the problem of providing mechanical means of varying the antenna loading. Parallel feed is used to isolate the plate voltage from the output circuit. While a conventional parallel-tuned tank circuit with a balanced link output might be more desirable for feeding the rig into a 300-ohm twin-lead, the unbalanced output circuit can be fed into a small antenna coupler or line-balancing balun made from coaxial cable. Antenna switching to the receiver input is also handled more easily with the unbalanced circuit.

As a safety measure, enough cathode bias is provided on each transmitter stage to keep the plate dissipation within reason when no crystal is plugged in or the tank circuits are off resonance.

Provision for metering the doubler and amplifier grid currents, the amplifier cathode current and the plate supply voltage is made by placing appropriate resistors in these circuits. Leads from these resistors connect to an octal socket installed in the rear of the chassis. The same test meter used with the G-E HAM NEWS 6-meter C-D transmitter (see page 8, also Volume 7, No. 1 for details) can be plugged into this socket when tuning up the transmitter. Test prods inserted in the appropriate socket holes can also be connected to the 10-volt DC scale on a multimeter.

AUDIO CIRCUITS

Plate and screen modulation of the final amplifier was felt to be more desirable for this type of transmitter, where every watt of output really counts, than the lower efficiency of *clamp-tube* modulation. The 6V6 was chosen as a Class A audio amplifier because it carries ratings up to 315 volts in this application. If the rig is to be run at 250 volts or less, the 6AQ5 miniature-tube version would suffice.

When transmitting, the speaker is switched from the secondary of the output transformer to the cathode of one section of a fourth 12AT7, which runs as grounded-grid voltage amplifier. The output of this stage feeds the voltage amplifier stage used for both receiving and transmitting. The other half of this tube is not used.

The audio output transformer, T_2, also serves as a center-tapped modulation choke. The 47-ohm resistor switched across the voice-coil winding in the "transmit" position *ties down* the secondary.

If the rig is to be used for occasional mobile operation in either an under-dash or on-the-seat installation, the speaker would be too far away from the operator to be conveniently used as a microphone. So, a closed-circuit type 'phone jack is provided in the cathode of the transmitter voltage amplifier. When a single-button carbon microphone is plugged in, the speaker is dis-

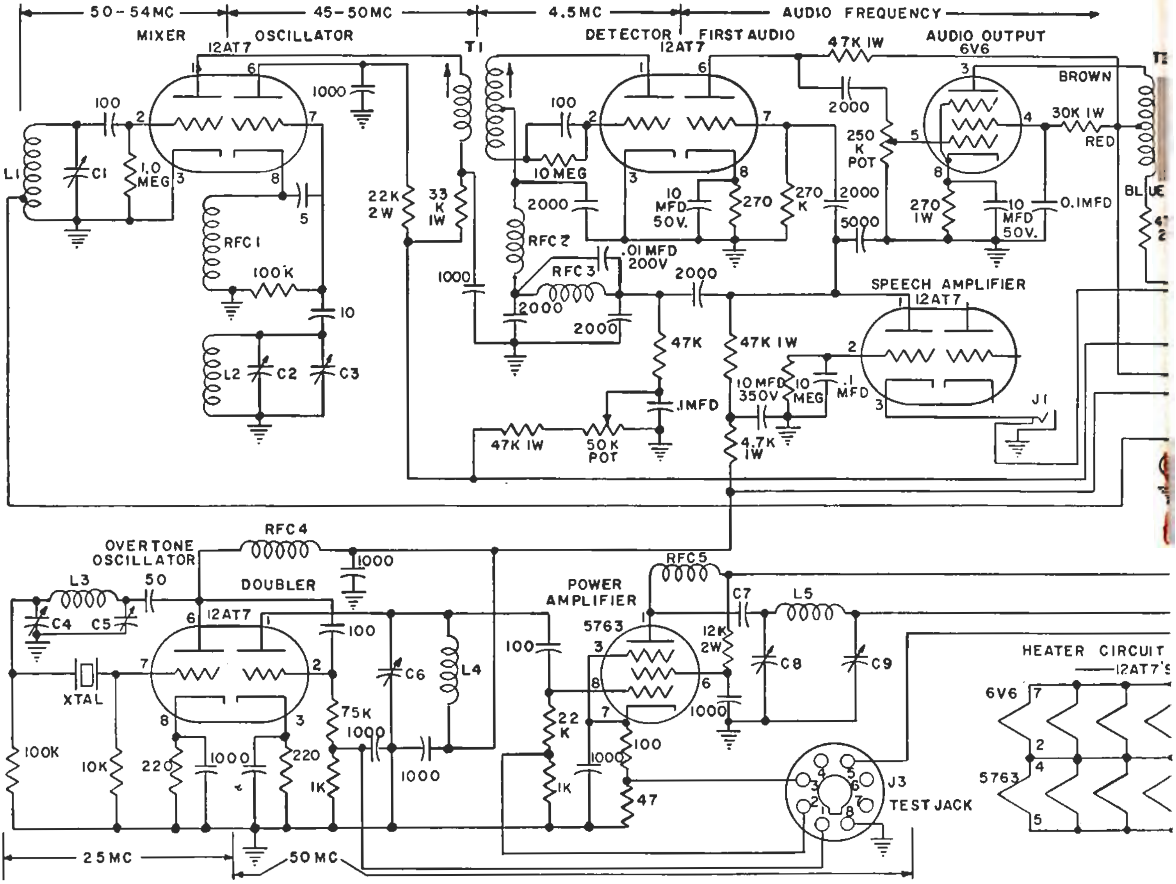

Fig. 1—Circuit diagram.

COIL TABLE

L₁—8 turns No. 16 enameled wire ½-inch inside dia
⅝-inch long—tapped 1½ turns from ground e

L₂—4 turns No. 16 enameled wire ½-inch inside dia
⅜-inch long.

L₃—15 turns No. 16 enameled wire ⅝-inch inside dia
1⅛-inch long.

L₄, L₅—6 turns No. 16 enameled wire ½-inch insid
eter—⅝-inch long, 2-inch leads on L₅.

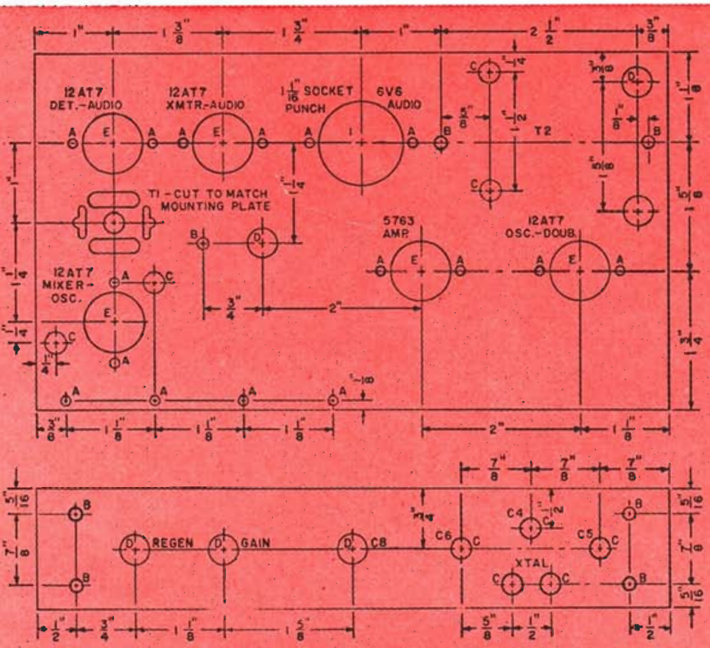

Fig. 2—Chassis drilling diagram.

LEGEND

"A" drill—No. 32 spaced to fit tube sockets.

"B" drill—No. 26 as shown.

"C" drill—¼-inch diameter.

"D" drill—⅜-inch diameter.

"E" socket punch—¾-inch diameter.

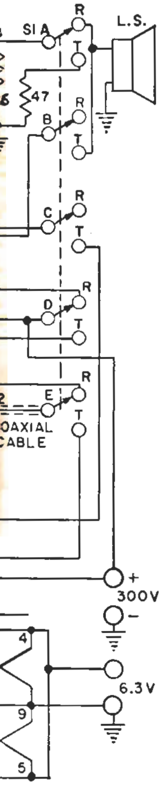

PARTS LIST

C_1—*1.8–8.7 mmf Variable Midget Capacitor (Johnson 9 M 11 Cat. 160–104).*

C_2—*2.3–14.2 mmf Variable Midget Capacitor (Johnson 15 M 11 Cat. 160–107).*

C_3—*15–130 mmf Variable Mica Padder Capacitor (El Menco 302-M).*

C_4, C_9—*65–340 mmf Variable Mica Padder Capacitor (El Menco 303-M).*

C_5, C_6—*2.7–19.6 mmf Variable Midget Capacitor (Johnson 20 M 11 Cat. 160–110).*

C_7—*1000 mmf, 1000-volt working disk ceramic.*

C_8—*3.5–27 mmf Variable Capacitor—0.030-inch air gap (Johnson 25 L 15 Cat. 167–102).*

J_1—*Midget closed-circuit 'phone jack.*

J_2—*Chassis-type coaxial cable jack.*

J_3—*Octal tube socket with ground lugs.*

LS—3½" PM speaker, 45-ohm voice coil.

RFC_1, RFC_5—*7 uh RF choke (Ohmite Z-50).*

RFC_2—*1 mh RF choke (Miller No. 952).*

RFC_3—*16 mh RF choke (Meissner 19–1995).*

RFC_4—*1 mh RF choke (National R-100).*

S_1—*6-pole, 2-position steatite miniature Rotary Selector Switch, non-shorting (Centralab PA-2019).*

T_1—*4.5 megacycle TV Replacement Sound Discriminator Transformer (Miller No. 6204).*

T_2—*18-watt universal speaker output transformer (Stancor A-3852).*

Xtal—Quartz crystal 8334 to 9000 KC with socket to match.

All capacitors in mmf 600-volt disk ceramic unless otherwise specified. Capacitors marked in mfd are 600-volt paper. Electrolytic capacitors are marked in mfd and voltage rating.

All resistors ½-watt unless otherwise specified. K=1000, Meg.=megohms.

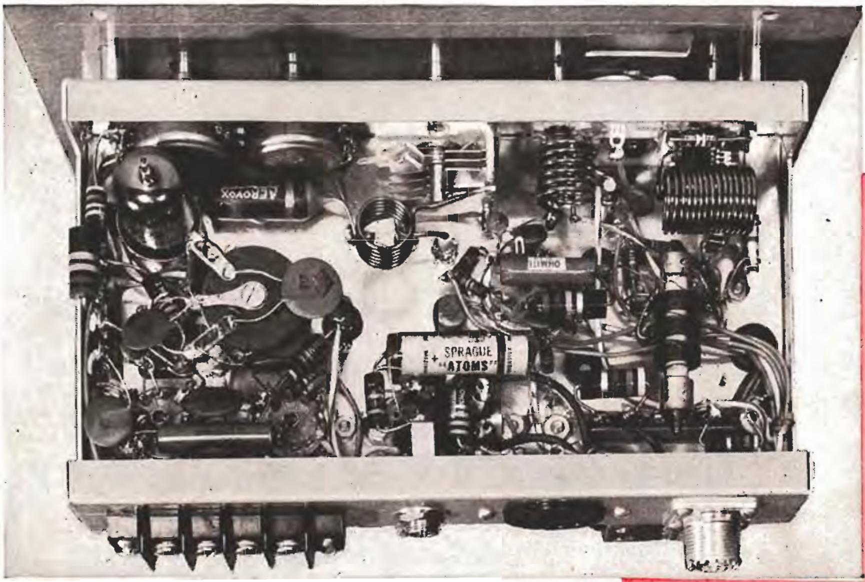

Fig. 3—Bottom view of chassis. RFC_3 is the large disk at the right of the inverted mixer tube.

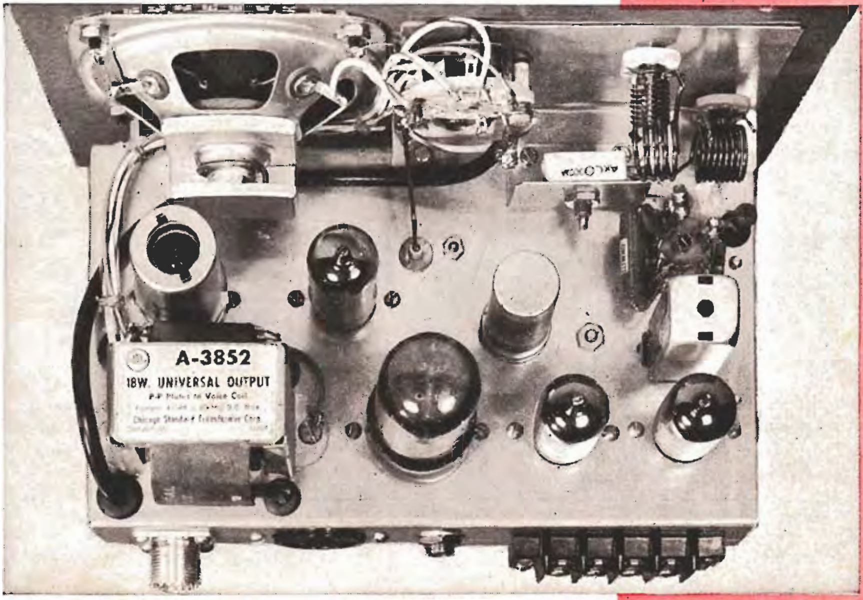

Fig. 4—Top view of chassis. A 6V6-GT audio output tube was used in the test model.

ter—

ter—

ter—

liamconnected from this circuit. The cathode current of this stage then supplies the required microphone current.

S_1 is assigned a great variety of tasks and handles the plate supply switching job easily when ceramic insulation is used. In the "receive" position it connects the antenna to the mixer grid coil, applies plate voltage to the mixer, oscillator and detector. Also, it connects the speaker to the audio amplifier output. In the "transmit" position, it connects the antenna to the final amplifier, applies plate voltage to the oscillator-doubler, applies modulated voltage to the final amplifier plate and screen and connects the speaker as a microphone.

CONSTRUCTION

The entire gear is easily housed in a 6 x 9 x 5-inch utility box. If much portable work is planned with this unit, the aluminum box used in the cover model is preferable to a steel one, weighing about two pounds less. All parts mount on either the removable front panel or a 4½ x 8 x 1½-inch open-end aluminum chassis, drilled as shown in Fig. 2.

The mounting plate furnished with T_1 is used as a drilling and filing template to cut identical holes in the chassis and is then discarded. The transformer is then fastened directly to the chassis with the furnished spring clip.

The lower panel edge is located ¾ inch down from the bottom of the chassis and matching ¼-inch holes are drilled for all parts except the crystal socket. A ½ x 1¼-inch panel cutout allows the crystal to be plugged in. Holes for C_2 and S_1 are located 1½ inches down from the panel top edge, with C_2 2¼ inches in from the side. S_1 is centered on the panel and C_9 locates 1¾ inches directly below it. C_1 is mounted 1⅛ inches from the panel edge and 1½ inches below C_3.

A piece of thin sheet aluminum, 4 x 4 inches, bent into an angle bracket and fastened to the front of the chassis, provides a good RF ground path for C_1, C_2, C_9 and S_1. C_3 mounts on another small aluminum angle bracket fastened with the same screws which hold the larger bracket.

A 3-inch diameter hole for the speaker is bored in the panel with a circle cutter centered 2⅛ inches down and 2¼ inches in from the panel edges, and covered with a small square of perforated do-it-yourself aluminum sheet.

All parts can now be fastened to the chassis front edge and the panel mounted after ⅜-inch long spacers cut from ¼-inch OD tubing are slipped over the 6–32 x ¾-inch long machine screws. Both potentiometer shafts are trimmed to protrude about ⅝ of an inch.

Both RFC_2 and RFC_3 fasten on a single 6–32 x 1½-inch long machine screw as shown in the bottom view, Fig. 3. The mixer-oscillator tube socket is inverted to allow short RF leads pictured in the top view, Fig. 4. The larger capacitors and resistors fasten to a 4- and a 6-terminal tie-point fastened under convenient mounting screws. The power terminal strip, microphone jack, metering socket and antenna connector mount on the rear of the chassis and matching holes are cut in the back cover of the utility box to clear these parts.

Power and audio wiring connections to S_1 are laced and run through two rubber grommets neaı T_2 and along the edge of the chassis to the switch, to avoid the RF circuits. All coils are air-wound and mount directly on their associated tuning capacitors. One end of L_4 is connected to a tie-point terminal so that the 1000-mmf by-pass capacitor and plate voltage lead can be wired. Short leads connect the antenna transfer switch section to loading capacitor C_9 and the tap on mixer grid coil L_1. A short length of RG-58/U coaxial cable connects the switch and antenna connector J_2.

RECEIVER ADJUSTMENT

The heater wiring should be tested before the rest of the wiring is completed so that any alterations can be made more easily. Before plate power is applied, a calibrated grid-dip oscillator is very handy for adjusting the tuned circuits to the correct frequency range. With C_2 set at the proper point, C_3 should tune the oscillator between 45 and 50 megacycles with the constants shown. Switch S_1 can now be set in the "receive" position, with the mixer-oscillator tube removed and plate voltage applied to the unit. With the volume control set at the mid-position, the 50,000-ohm potentiometer controlling the superregenerative detector plate voltage should be advanced until a sharp hiss becomes noticeable. If no hiss is present, a grid-dip oscillator or other signal generator should be closely coupled to the detector and tuned from approximately 4 to 5 megacycles to see if a beat-note can be heard when the plate-voltage control is fully advanced. If this is the case, a higher resistance than the 10 megohms specified may be necessary to initiate a superregenerative type oscillation. RFC_3 and its associated by-pass capacitors form a filter that keeps the quench oscillation out of the audio circuits.

If a signal generator is not readily available, two or three feet of wire clipped on pin 6 of the mixer tube socket should provide enough pickup of outside signals in the 4 to 5 megacycle range to check the operation of the detector. The mixer-oscillator tube then can be inserted and the detector set to a clear frequency by tuning the slug on the bottom of the IF transformer. The mixer plate circuit slug on the top of the transformer should then be tuned until the detector goes out of oscillation when the resonant frequency is passed. Raising the detector plate voltage slightly should again cause the detector to oscillate. With the detector grid circuit values specified, oscillation should begin when the plate-voltage control is advanced about halfway. On the test model, a reading of 60 volts was measured at the center tap of the IF transformer secondary.

Dial calibration of the receiver oscillator can best be done with harmonics of a crystal frequency standard or signals of known frequency.

TRANSMITTER ADJUSTMENT

The test meter, shown in Fig. 5, can now be plugged into the metering socket, with the selector switch set on position one. The 12AT7 oscillator-doubler and 5763 amplifier tubes are inserted in their sockets and S_1 turned to the "transmit" position. A fundamental type crystal between 8334 and 9000 KC or a third-overtone crystal between 25 and 27 megacycles is plugged into the crystal socket. Feedback capacitor C_4 is then set about two turns from maximum capacity and oscillator tuning capacitor C_5 rotated until a reading of 2 to 3 grid ma is noted in the 0- to 10-ma range of the test meter. Then the feedback capacitor can be slowly adjusted for increasing capacity until oscillation stops. The final setting should be about one-quarter turn toward minimum capacity from this point. The test meter should now be set on position two, also a 10-ma scale. A sharp increase in amplifier grid current should be noted when doubler tuning capacitor C_6 is next adjusted.

The test meter is now set on position three, which reads the amplifier cathode current. A dummy load made from six 330-ohm, 2-watt composition resistors in parallel is connected to the antenna terminal.

With loading capacitor C_9 set at maximum capacity, C_8 is tuned to resonance. A reading of about 30 ma should be noted on the 100-ma full-scale meter range in position three. Capacitor C_9 should then be slowly decreased in capacity, keeping C_8 tuned for minimum cathode current, until the meter reads about 50 ma. After subtracting screen and grid currents, this indicates a plate input of 12 watts with a 300-volt plate supply. The test model delivered more than 7 watts output to a 52-ohm load when checked in the laboratory.

Two self-tapping screws driven from the back cover to the rear of the chassis when the gear is placed in the box will make the unit rigid.

SWEEPING *the* SPECTRUM

If you have thumbed through a recent receiving tube price list or characteristics handbook, several bewildering new type numbers may have come to your attention. Most of these additions are the result of tube manufacturers' attempts to cater to the demands of the television industry for tubes that will handle special color-TV applications as well as give better performance and longer life in any receiver.

With the introduction of 600-milliampere tubes specifically for series heater circuit operation, some confusion has resulted in regards to interchangeability with their prototypes. Also, the use of suffixes A and B, in addition to the common ones of G and GT, has raised some questions as to their meaning.

The following is an attempt to clarify these questions.

One—All types that originally had 600-milliampere heaters which were used in series receivers were revised only to the extent of controlling the heater warm-up time. In these cases the suffix A or B *may* indicate such a feature, but to avoid confusion can be disregarded as all future production of such types will have only the new heater. Examples are the 6S4A and 6SN7-GTB. Obviously, no problem exists in using any types in parallel-connected receivers but use of any old type tube numbers (e.g., 6S4, 6SN7-GTA) in series-string receivers is not recommended.

Two—All types that originally did not have 600-milliampere heaters but were desired for use in series sets had to be registered as an entirely new type and as such will have the controlled heater warm-up characteristic. Examples are the 5BK7A and 2AF4A. In these cases the suffix has no meaning in connection with heater characteristics.

Three—It is safe to assume that any 600-milliampere heater rated receiving type that may be developed in the future will have a controlled heater warm-up characteristic regardless of its intended application, consequently no suffix would be used in the original registration. Example—6AU8.

From the above it is apparent that use of *suffixes A and B have no consistent meaning except as an indication of the order in which they were assigned numbers by the Radio Electronic-Television Manufacturers' Association.* Their presence indicates a change has been made in the tube type but this change may be electrical, mechanical, or both. The RETMA designation system for receiving tubes states: The letters A, B, C, D, E and F assigned in that order indicate a later and modified version of a specific tube which can be substituted for any previous version but not vice-versa. As examples the 12BH7A is merely a controlled heater warm-up version of the 12BH7. The 6AF4A is a short bulb version of the 6AF4 while the 25CD6-GB is an entirely new 25-volt version of the 6CD6-G with improved electrical characteristics, controlled heater warm-up and straight-sided envelope.

Generally speaking, there should be no problem in using later designs in old equipment. The only possible difficulty would be minor mechanical, such as base clamps or withdrawing shorter tubes from recessed sockets. Future equipments present no problem as no designer would specify an obsolete type and the present rate of consumption will soon eliminate inventories of old style tubes.

* * *

Through a request for back issues of G-E HAM NEWS, existence of a unique amateur radio club has come to my attention. J. G. McKinley, Jr., W3OB, secretary of the Maritime Mobile Amateur Radio Club, states that the club publishes a periodical newsletter, but never holds a membership meeting!! Because a majority of the 150 members serve as Captains or Radio Officers on ships throughout the world, all club business has to be transacted by mail or amateur radio schedules. Instead of a "President" and "Vice-president," they have a "Commodore" and "Vice-commodore." They are: J. H. B. van Weelderen, W4RW, Captain of the *Gulf Victor;* and Kurt Carlsen, W2-ZXM, Captain of the *Flying Enterprise II,* respectively. W2ZXM is the famous, "Captain Stay-put," who remained alone aboard his storm-damaged ship off the coast of England until shortly before she sank, early in 1952.

* * *

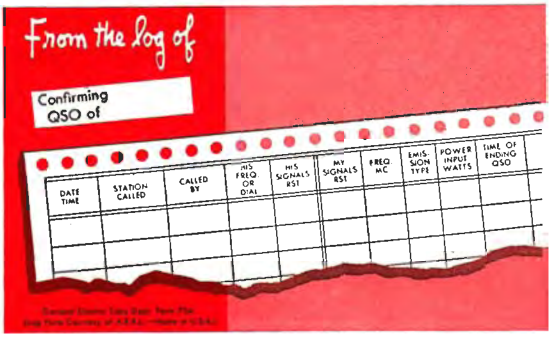

From the log of

Confirming
QSO of

DATE TIME	STATION CALLED	CALLED BY	HIS FREQ. OR DIAL	HIS SIGNALS RST	MY SIGNALS RST	FREQ. MC	EMISSION TYPE	POWER INPUT WATTS	TIME OF ENDING QSO

Would the attractive, two-color blank QSL card pictured above, designed around the standard ARRL logbook form, interest you? They would be ideal for confirming those Field Day, VHF QSO party, Sweepstakes or DX contest contacts; portable expedition or temporary location QSO's. Ample space is provided above and below the form to imprint your own call letters, name and location either by hand or with a rubber stamp. No advertising would appear on this card. If enough of you fellows want these cards, I can arrange to make them available at three hundred for a dollar—delivered postpaid. Drop me a postal card, saying "Yes" or "No," as soon as you read this!!

—*Lighthouse Larry*

Transceiver Test Meter

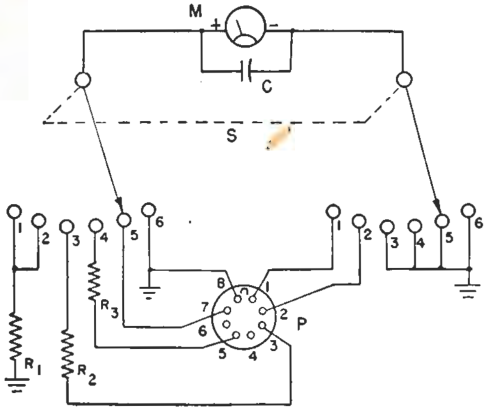

Fig. 5—Circuit diagram of test meter.

CIRCUIT CONSTANTS

C	*270 mmf mica or high-K ceramic*
M	*0 to 1 ma d-c meter*
P	*Octal plug*
R_1	*10,000 ohm, ½ watt (see text)*
R_2	*5000 ohm, ½ watt (see text)*
R_3	*1 megohm, 1 watt (see text)*
S	*Two-pole, six-position rotary switch*

Since the test meter for the 6-meter CD transmitter (see G-E HAM NEWS, Volume 7, No. 1, for details), met the metering requirements for this unit, the circuit, shown in Fig. 5, is being repeated for those who do not have access to this issue. A few of these meters may be available in localities where these CD rigs are in use.

In switch positions 1 and 2, the resistor R_1 causes the meter to act as a 0 to 10 voltmeter; in switch position 3, resistor R_2 makes the meter into a 0 to 5 voltmeter; in switch position 4, resistor R_3 forms a voltmeter with the range 0 to 1000 volts; in switch position 5, the meter is used as a—0 to 1 milliameter; in position 6 the meter is shorted (the recommended "off" position).

The following tabulation indicates the "current" and voltage which the meter reads when it is switched to the various positions:

Position 1: Full scale equals 10 ma doubler grid current.

Position 2: Full scale equals 10 ma final grid current.

Position 3: Full scale equals 100 ma final cathode current.

Position 4: Full scale equals 1000 volts plate voltage.

Position 5: Relative power output reading (Not used).

Position 6: Off.

For accurate scale readings, the resistors specified should be as accurate as possible. Strictly speaking, however, accuracy is not paramount, inasmuch as the metering system will undoubtedly be used mainly as a tune-up aid.

Electronic
TUBES

Printed in U.S.A.

G-E HAM NEWS

Available FREE from
G-E Electronic Tube Distributors

VOL. 10—NO. 4

published bi-monthly by
TUBE DEPARTMENT
GENERAL ELECTRIC
Schenectady 5, N. Y.

In Canada
Canadian General Electric Co., Ltd.
Toronto, Ontario

E. A. NEAL, W2JZK—EDITOR

JULY—AUGUST, 1955

Electronic
TUBES

G-E HAM NEWS

Copyright 1955, by General Electric Company

TUBE DEPARTMENT
GENERAL ELECTRIC
Schenectady 5, N. Y.

SEPTEMBER–OCTOBER, 1955

VOL. 10–NO. 5

A 6-METER SPECTACULAR—Part II

"SIMPLE-SIXER" CONVERTER

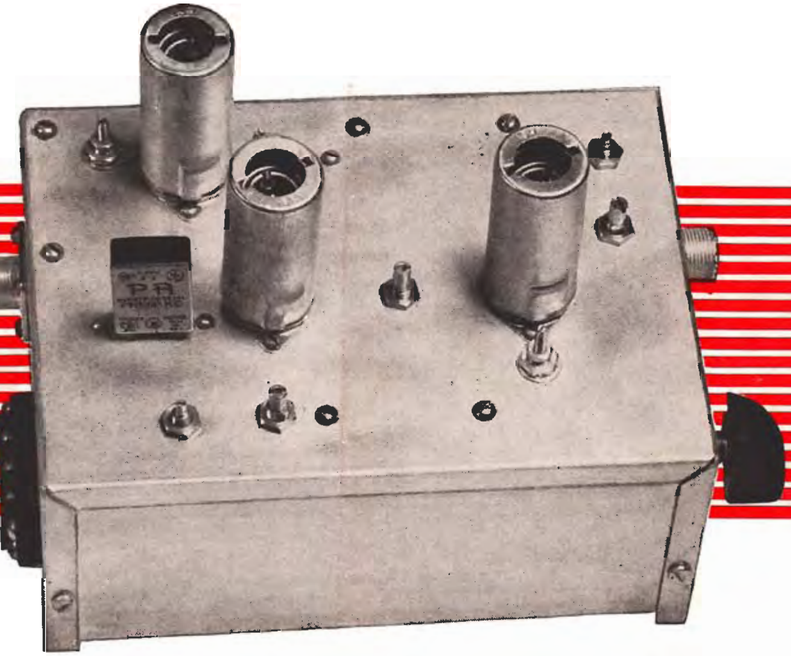

Part II is a 6-meter crystal-controlled converter that digs right down into the external noise level picked up by your antenna—rejects intermediate frequency range signals—and at the same time is simple to build and adjust. When used with the "Bonus 100" transmitter to be described in the next issue and a rotary beam antenna, some surprising contacts can be made.

—*Lighthouse Larry*

CONTENTS

OPERATION CRYSTAL

The idea for this twin crystal receiver, which uses two of everything except grounds and pairs of earphones, came from Edmon L. Anderson, Moorpark, California. The three-gang 15–400-mmf broadcast band type variable capacitor, shown at right, tunes both detector circuits and the series-tuned ground circuit. A single variable air or mica-padding capacitor helps make the ground circuit tuning track. After a station is tuned in, some interesting variations in carrier and audio signal strength can be obtained by tuning the slugs in Vari-loopstick coils L_1 and L_2. A definite reduction in signal strength was noted when one crystal diode was disconnected after first peaking all the adjustments for maximum signal with both parts of the circuit working. If you try this test, do not expect to detect any startling differences by ear. In making these tests, I find that an oscilloscope used as a peak-to-peak audio voltmeter and the low voltage ranges on a vacuum tube voltmeter are necessary to evaluate the merit of most circuits. Erecting the extra antenna 8 feet from my original test antenna was a simple task because Mother Nature correctly placed the necessary trees at the test location.

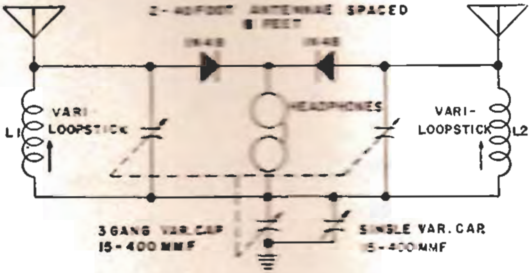

Pi-networks are getting into the act in every corner of amateur radio these days! If you haven't thrown away those old 3- or 4-gang broadcast set variable capacitors that probably have been kicking around in your junk-box for several years, stick them into this Canadian pi-network crystal receiver dreamed up by E. J. Epp, VE3AJY, of Armstrong, Ontario. A single-gang capacitor with a few 500-mmf fixed capacitors that can be switched across it with a tap switch also will work for both C_1 and C_2, pictured at the right. If you have plenty of No. 30 wire, tap switches and ambition, you can build your own coil by winding 180 turns, tapped every 10th turn, on a 1¼-inch diameter form. Or, substituting a Vari-loopstick coil will give you just about the same results, but look at all the fun you will miss by not winding and tapping those 180 turns. Both audio voltage and direct current through the headphones were somewhat higher than with a conventional tuned circuit because of an improved impedance match at both ends of the pi-network when properly adjusted.

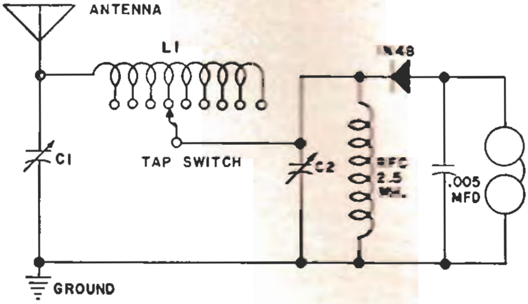

Here's an idea, also pictured at the right, for making a combination signal tracer and crystal radio receiver, submitted by J. L. Walty, of Walla Walla, Washington. The circuit is built into a small plastic box about 3 x 2 x 1 inches, with a probe on one end made from a 1½-inch long brass machine screw.

If your pet crystal receiver circuit can be squeezed into a small box, use it instead of Mr. Walty's simple one using just a slug-tuned Vari-loopstick coil. The 300-mmf coupling capacitor from the probe to the coil is necessary to keep DC voltages out of the circuit when tracing a plate circuit signal. The ground clip lead should be connected to the chassis when signal tracing, or an earth ground for crystal receiver operation. An outside antenna should be hooked on the probe when using this gadget as a radio.

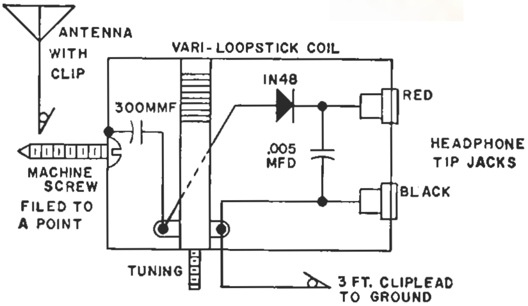

All ideas submitted before December 1, 1955, will be eligible for publication in the OPERATION CRYSTAL Column. (See G-E HAM NEWS, Volume 10, No. 1, for details.) Do not send in your model!! Submitters of the three ideas published in each issue receive certificates for $10 in G-E electronic tubes. Construction and simple antenna hints of an outstanding nature are also eligible. All material submitted must be free of patent restrictions and becomes the property of G-E HAM NEWS.

—*Danny Diode*

"SIMPLE-SIXER" CONVERTER

Here's a 6-meter crystal-controlled converter designed especially for the radio amateur who has *tasted* this band with the *bare essentials* and is now ready for equipment that will enable him to explore the interesting possibilities of the 50- to 54-megacycle range to the fullest extent.

Why use a cascode circuit on 6 meters? The lower noise figure of this type circuit over conventional pentode RF amplifiers will not be noticed at many locations at which the local noise level is high. But, local noise may be substantially lower during those early daylight or late evening hours when tropospheric-bending propagation is often present. That last 2 or 3 db reduction of internal noise in this converter will help you complete many extended ground wave contacts during those periods.

The stability problem encountered in using a converter with a tunable oscillator for this band is easily licked by using the fifth overtone of an 8-megacycle crystal to provide a 40-megacycle mixing signal without resorting to frequency multipliers after the oscillator. The resulting 10- to 14-megacycle intermediate frequency range was selected after surveying the tuning ranges of most popular communications receivers. BC-348 and SX-96 receiver owners will find that crystal oscillator output frequencies of 40.5 and 41 megacycles respectively, will allow the 6-meter band to be covered in one tuning range.

The electrical bandspread tuning dial on receivers having them can be juggled to make the main tuning dial read the correct tuning range if you wish to use a crystal not precisely 8 megacycles.

Performance requirements for the receiver into which the converter works can best be described by the old saying, "The merit of a radio receiver is not in what it will receive, but in what it will not receive." If your receiver is sufficiently well shielded to be almost "dead" in this range with the antenna and ground disconnected, you are already in business.

Replacing the receiver antenna terminal strip with a coaxial cable jack will reduce unwanted signal pickup from this source in many cases. Or, the jack could be mounted on a small aluminum box that encloses the antenna terminals if you do not wish to alter your receiver. (If you solve the problem of tightening the antenna terminal screw when the box is in place, send in a description to our "Tricks and Topics" column.)

CIRCUIT DETAILS

The antenna input impedance matching arrangement shown in the schematic diagram, Fig. 1, also used in the G-E HAM NEWS "R-9'er" (See Volume 1 No. 4, for details), simplifies adjustment of the antenna coupling to the RF amplifier input circuit (L_1–C_1).

The double-tuned tank circuit shown below at "A" is actually the equivalent of circuit "B." These units are easily made from a single, tapped length of B & W *Miniductor* coil material with the ends connected to the stator sections of a *Johnson type M* midget butterfly variable capacitor. The two units used in the RF amplifier grid (L_1–C_1) and plate (L_2–C_2) circuits were stagger-tuned to provide a flat-topped response curve about 4 megacycles wide when the converter was checked with standard television receiver RF alignment equipment. These tank circuits also have good *skirt* selectivity, which helps prevent strong signals in the 10- to 14-megacycle intermediate frequency range from feeding through the converter.

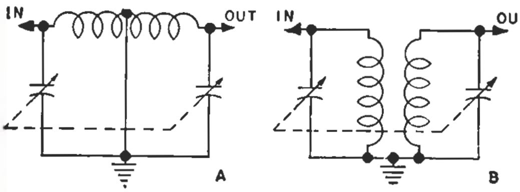

The simplified cascode RF amplifier circuit using a 6BK7A gives about the same rejection to a 10-megacycle test signal fed into antenna jack J_1 as a more complicated circuit using an extra tuned circuit between the two cascode tube sections. Use of shields on all tubes also helps prevent direct intermediate frequency signal pickup.

The pentode half of a 6U8 works as a mixer, with the triode functioning as an overtone crystal oscillator. The pi-network (L_4, C_4, C_5) feedback arrangement allows considerable flexibility in crystal choice. Inexpensive third-overtone 24-megacycle or most 8 megacycle fundamental frequency crystals have satisfactory output at the 40-megacycle fifth overtone, avoiding the need for the more costly VHF crystals.

Another 6U8 pentode section intermediate frequency amplifier feeds the triode section, used as a cathode follower output stage. The two intermediate frequency plate circuit coils (L_5 and L_6) are stagger-tuned for improved band-pass in the 10- to 14-megacycle range. Some inexpensive receivers which may be used as the tunable intermediate frequency section have no RF amplifier. The intermediate frequency amplifier built into the converter insures sufficient gain to overcome this limitation. A gain control which varies the cathode bias on this stage permits the converter output to be adjusted for best performance without overloading even "hot" receivers. Heater and plate power can be obtained from any source capable of supplying 6.3 volts at 1.2 amperes and 200–250 volts DC at 40 milliamperes.

CONSTRUCTION

The difficult task of working in the tight corners of a small conventional chassis was avoided by building the converter on the half of a 3 x 5 x 7-inch aluminum "channel-lock" type two-piece utility case having the 3- x 5-inch ends. The parts layout was determined after much *cut-and-try* and should be followed closely. The padder capacitor, coil forms, tube and crystal sockets and terminal strips mount on the top of this box in the locations marked on the chassis drilling diagram, Fig. 2. The gain control and antenna input coaxial cable jack (J_1) are located on one end plate $1\frac{1}{2}$ inches down from the top and $1\frac{1}{4}$ inches in from the side corners. The output jack (J_2) and a 3-screw terminal connection strip occupy the other end.

A small shield made from $\frac{1}{32}$-inch thick soft sheet aluminum $4\frac{3}{4}$ x $3\frac{1}{8}$ inches separates L_5, L_6, J_2 and the intermediate frequency amplifier tube socket from the VHF circuits. The metal is folded so that the long side is 2 inches long, the short wall $1\frac{1}{2}$ inches wide, with a $1\frac{1}{4}$-inch long wall placed at an angle between them. Two small $\frac{1}{4}$-inch wide flanges are formed on the side adjacent to the top of the chassis for mounting with 4–40 x $\frac{1}{4}$-inch long machine screws, as shown in the bottom view, Fig. 3. The shield should be trimmed to fit snugly against the other half of the utility case when it is assembled. The top corner at each end of the shield is cut off to permit wiring to enter the intermediate frequency compartment.

The shield should be mounted after all connections except the wire from plate pin 6 of the 6U8 mixer tube socket to the lower end of L_5 are completed. This lead passes through a $\frac{1}{4}$-inch diameter hole in the

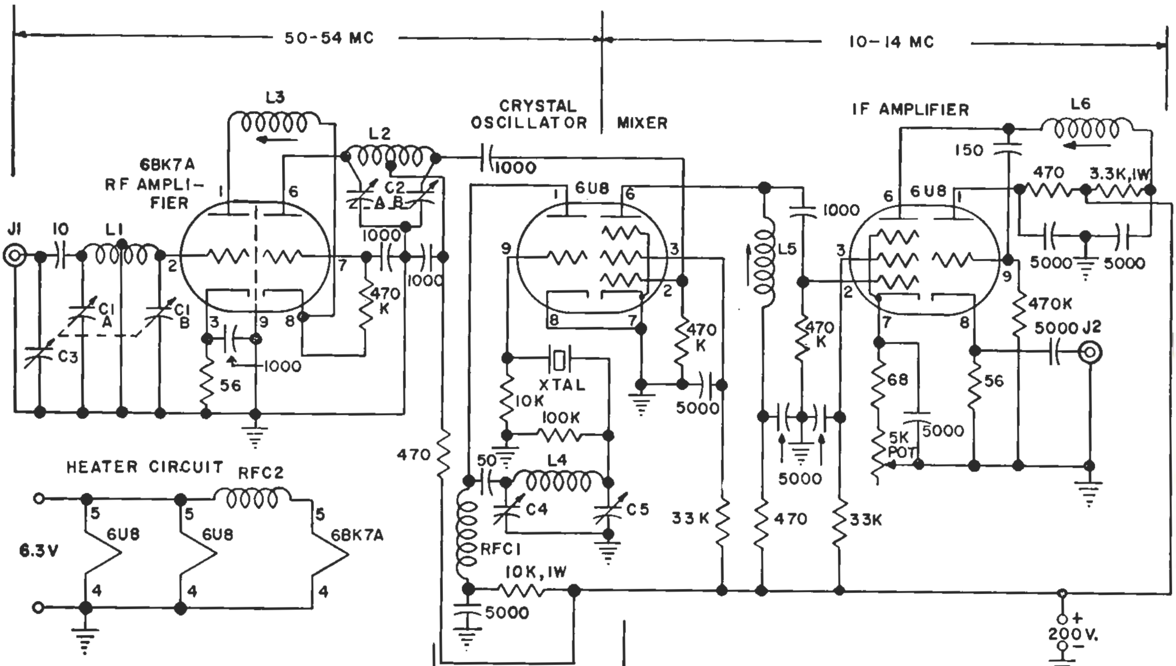

Fig. 1—Schematic diagram.

PARTS LIST

C_1, C_2,—2.2–8.0-mmf butterfly variable capacitors (Johnson 9MB11 Cat. 160–208)

C_3, C_5,—15–130-mmf variable mica padder capacitor (El Menco 302)

C_4—1.8–8.7-mmf single midget variable capacitor (Johnson 9M11 Cat. 160–104)

RFC_1, RFC_2—Ohmite Z-50 RF Chokes

Xtal-Quartz crystal, 8.000 or 24.000 megacycles

All capacitors in mmf, 600-volt disc ceramic

All resistors ½-watt, unless otherwise specified

COIL TABLE

L_1, L_2 and L_4 made from B & W Miniductors, Type 3007, ⅝-inch diameter, 16 turns per inch

L_1—9 turns with ¾-inch leads, tapped at 4 turns from antenna end

L_2—10 turns with ¾-inch leads, center-tapped

L_3—CTC Type LS-3 blank coil form close-wound with 20 turns of No. 26 enameled wire

L_4—14 turns with ½-inch leads

L_5, L_6—CTC Type LS-3 10-megacycle coils, as-is (Cambridge Thermionic Corp.)

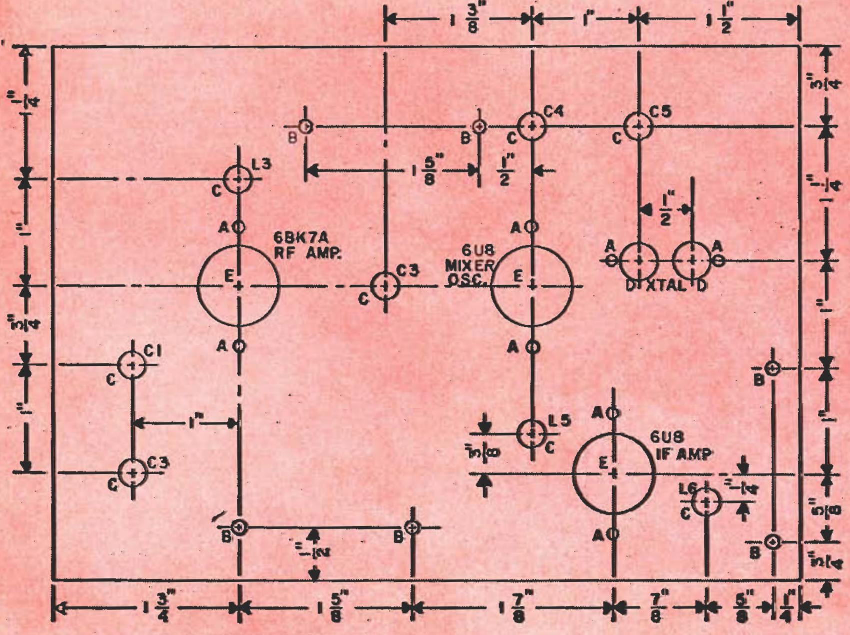

DRILL LEGEND

"A" drill—No. 32 spaced to suit sockets

"B" drill—No. 26 for terminal strips

"C" drill—¼-inch diameter

"D" drill—⅜-inch diameter for crystal socket

"E" socket punch—¾-inch diameter

Fig. 2—Drilling diagram of the 6-meter converter.

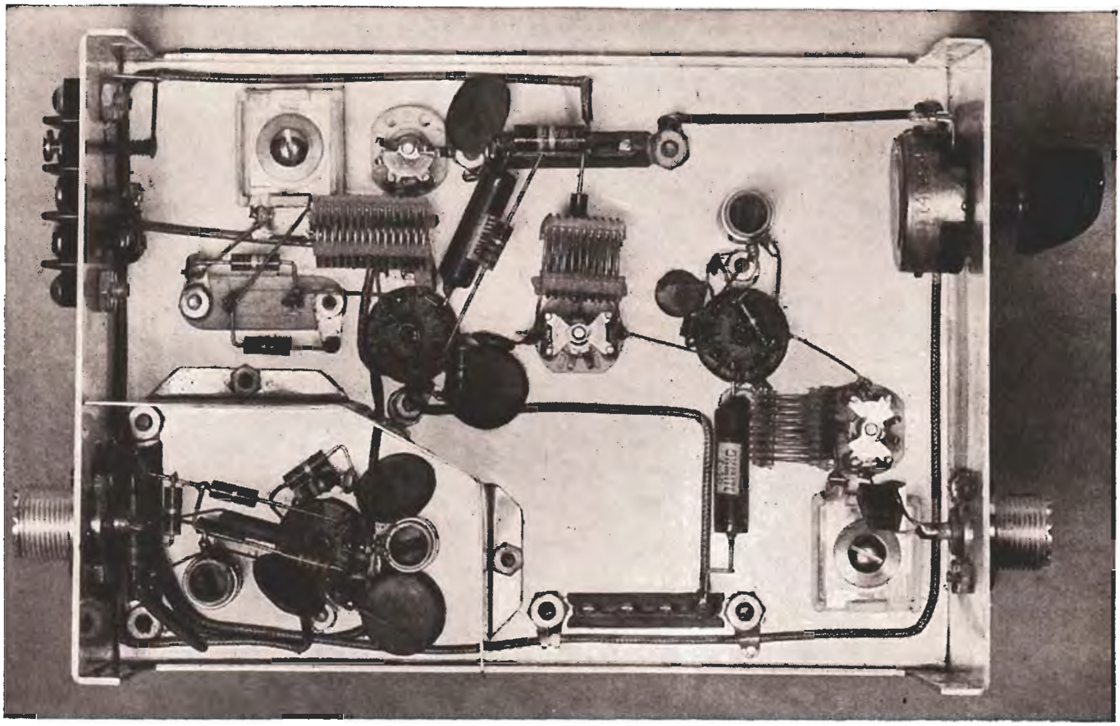

Fig. 3—Bottom view of the 6-meter converter showing placement of the shield around the intermediate frequency amplifier and positioning of coils.

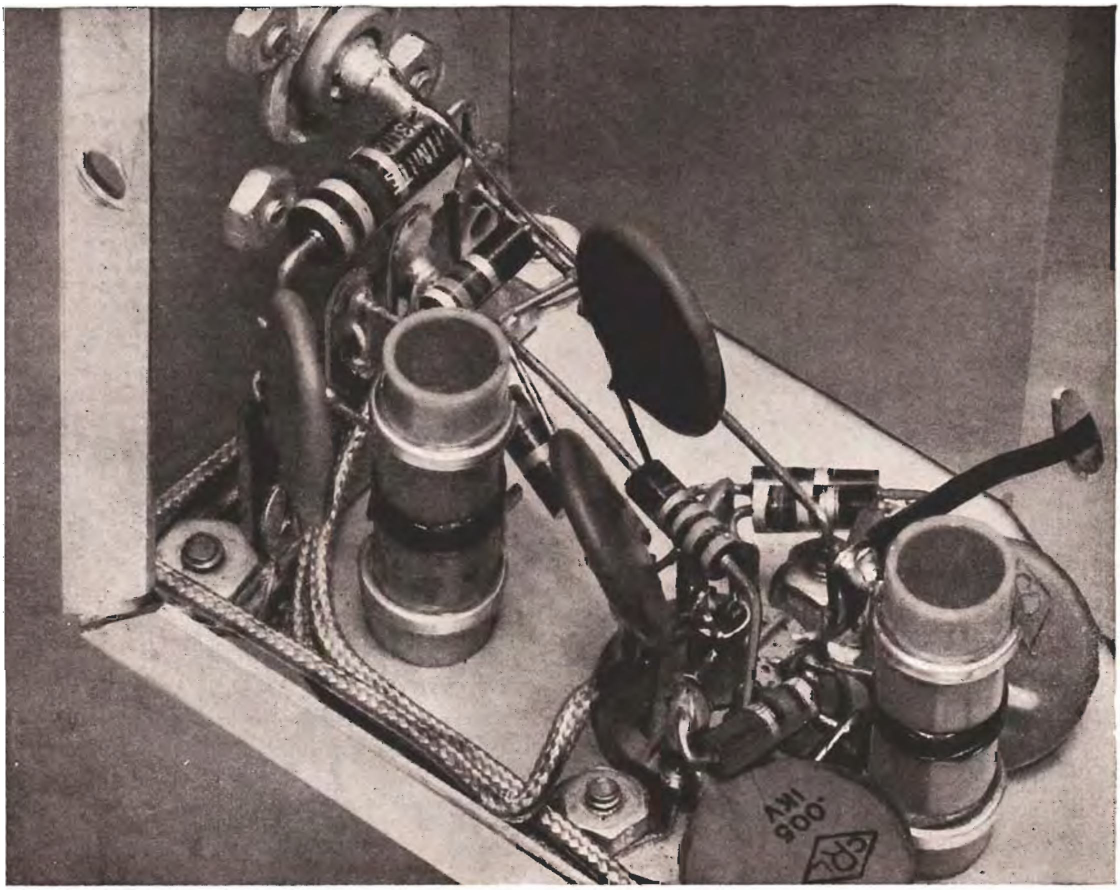

Fig. 4—Intermediate frequency amplifier compartment view.

shield, pictured in the compartment view, Fig. 4. The soldering terminals on L_5 and L_6 should not be moved when assembling and wiring these coils or the fine wire leads may be damaged.

All resistors except the cathode bias and grid-to-ground units mount on the three 4-terminal Cinch-Jones 2000–4 mounting strips placed at convenient locations. By-pass and coupling capacitors fasten directly on their associated parts and to ground terminal lugs placed under all the 4–40 x ¼-inch long machine screws holding the tube sockets, coaxial cable connectors and terminal strips to the chassis.

All heater, plate power and gain control connecting leads run near the corners of the chassis. However, keep these wires and all other parts at least ⅛-inch away from these corners so that the other half of the case can be assembled without interference.

Duplication of band-pass transformers L_1–C_1 and L_2–C_2 is simplified by making the coils from standard Miniductor material and using the midget butterfly variable capacitors for fine tuning adjustments. The coil used for L_2 should be tapped as shown in the coil table on page 4 by bending in the coil-turn each side of the tap enough to prevent it from becoming shorted when one lead from the 1000-mmf ceramic disk by-pass capacitor is soldered to the proper coil-turn. One lead of a 470-ohm resistor also connects to this coil-tap. The other end of this resistor extends to the plate voltage lug on the nearest terminal strip. The other by-pass capacitor lead connects directly to the rotor ground lug on C_2. The ends of the coil then connect to the stator lugs on C_2 with leads just long enough to allow the coil to clear the capacitor rotor when it is tuned. The completed transformer assembly is pictured in Fig. 5.

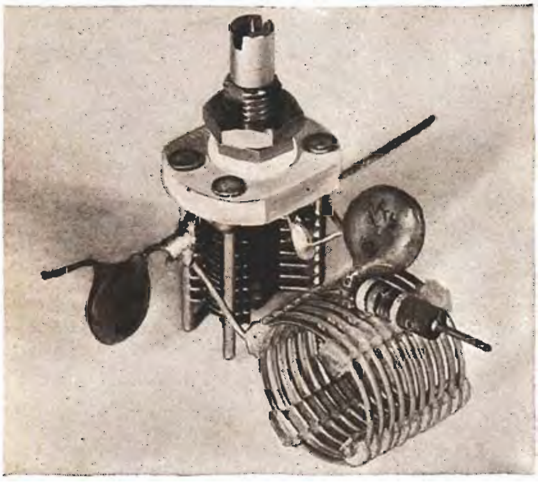

Fig. 5—Detail view of RF transformer L_2–C_2. L_1–C_1 is identical except that no resistor and by-pass capacitor is used on the coil-tap.

Transformer C_1–L_1 is assembled in the same manner, except that a short length of wire is attached to the coil-tap for a direct ground connection to the rotor lug on C_1. Make sure the coils have no shorted turns before mounting the completed assemblies on the chassis. One stator lug on C_2 connects to plate pin 6 on the 6BK7A, the other lug goes to pin 2 of the 6U8 mixer through a 1000-mmf coupling capacitor. Corresponding lugs on C_1 connect to pin 2 on the 6BK7A and through a 10-mmf coupling capacitor to the ungrounded lug on C_3. All RF and by-pass connections should be made with shortest possible wires.

ADJUSTMENT PROCEDURE

Power should be applied to the converter and the heater voltage measured before inserting the 6U8 mixer-oscillator tube. Next, a tube shield is placed over the 6U8 and an appropriate crystal plugged into the proper socket. With C_5 set about one turn from maximum capacity, plate voltage is next applied. A No. 48 or 49 (2.0 volt, 60 ma) pilot bulb with a 1-inch diameter wire loop soldered to the base terminals or a small neon bulb, is then held near L_4, and C_4 is slowly tuned near maximum capacity until the bulb lights. Feedback capacitor C_5 should then slowly be turned toward maximum capacity until oscillation stops, then toward minimum capacity until oscillation again begins.

The oscillator frequency should next be checked with a calibrated wavemeter or receiver tuning the 40-megacycle range to insure that the oscillator is working on the correct overtone. Settings of C_5 will be near maximum capacity for overtone crystals and about one turn from maximum for fundamental crystals. Self-oscillation may be noted near the minimum capacity setting of C_4 when too much feedback is used.

The output of the converter is now connected to the station receiver through a length of coaxial cable and the 6U8 intermediate frequency amplifier tube and shield inserted. A signal generator or grid-dip oscillator covering both the 50 to 54 and 10- to 14-megacycle ranges is handy for aligning the remaining tuned circuits. Once the converter crystal oscillator is working, the station receiver can be used to check the calibration on both ranges of these instruments. L_5 and L_6 should be peaked at 11 and 13 megacycles respectively, using a signal fed into pin 2 of the 6U8 mixer.

The bottom half of the box should now be assembled and the 6BK7A tube and shield inserted. A short length of 52-ohm coaxial cable is then plugged into the antenna connector and a 56-ohm composition resistor wired across the other end. The signal source coupled to this cable is then set to 52.5 megacycles and C_2 is tuned for maximum signal.

The antenna input circuit, L_1–C_1, antenna matching capacitor C_3 and neutralizing coil L_3 can next be adjusted for lowest noise figure using a noise generator, such as the one described on page 2 of the September–October, 1954, issue of G-E HAM NEWS. If a noise generator is not available, C_1 is adjusted for maximum signal when the test source is set at 50.5 megacycles.

Then, L_3 can be adjusted for *minimum* signal feed-through by temporarily disconnecting heater voltage from the 6BK7A. Adjustment of L_3 for best noise figure and the signal null is fairly broad at 50 megacycles. The heater power lead is again connected to the 6BK7A and C_3 is set for maximum signal at 50.5 megacycles. C_1 may need a slight readjustment for maximum response after matching the antenna impedance. A noise figure reading of 4 db was obtained on the test model on a laboratory-type noise generator using both the above alignment methods.

A shielded power connection cable will minimize intermediate frequency range signal pickup from this source. When an unshielded cable was used during tests, nearby short-wave broadcast stations in the 11.8-megacycle band were distinctly audible until a 1-mh RF choke was inserted in the positive plate lead *outside* the converter case at the terminal strip.

Best reception can only be obtained if an efficient antenna is used. A large rotary beam, such as a 2 or 3 bay stack of 4 or 5 element Yagi antennas, pays big dividends on the 50-megacycle band. They can be mounted on a few television antenna mast sections and braced with guy wires connected to a rotating guy ring placed just below the top bay. Each bay can be made from a "stretched" bargain-priced channel 2 television antenna.

SWEEPING *the* SPECTRUM

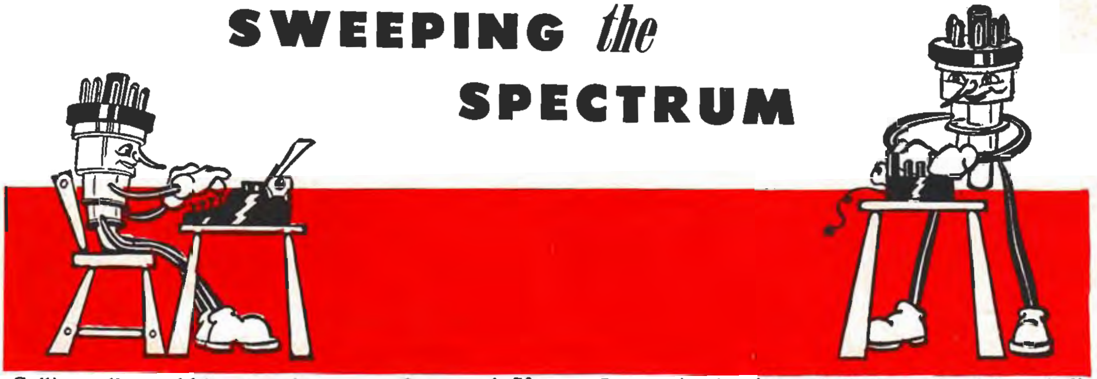

Calling all would-be transistor experimenters! If price has prevented you from trying some of the audio and low-frequency RF transistor circuits recently published, the Semi-conductor department of the G-E Electronics Division has come to your rescue with a new, inexpensive PNP junction transistor, the 2N107. They are now available on a display card at most G-E electronic tube distributors in a convenient package of two. Included in the package, which sells for little more than a carton of cigarettes, is a booklet showing several simple audio voltage amplifier, speaker output amplifier, code-practice oscillator, radio receiver and TV antenna orientation meter circuits. They require only a few parts, plus two to four ordinary flashlight cells for power. Use them for a microphone preamplifier which will have no hum problems from AC tube heaters. They will operate in RF applications up to one megacycle. Try a package soon.

* * *

Remember the flood of comments and ideas I received for the Tricks and Topics Column four or five years ago about the "How to get the nut on the almost inaccessible bolt trick?" A *king-sized* example of a similar situation recently came to my attention in the Camera Tube section of the G-E Power Tube factory here at Schenectady.

In the assembly of the GL-5820 image-orthicon type television camera tube, the *target* assembly must be lowered through the neck to its final position near the faceplate with the tube standing on end. Then, small clamping screws must be carefully tightened, using screwdrivers 18 inches long, without having any dust enter the tube during this operation.

Delicacy of this assembly can be emphasized by the fact that the target consists of a 0.00015-inch thick circle of glass separated 0.002 inches from a 500 wire-per-inch circular copper screen mesh by a spacer ring. Tiny rivets fasten the mesh to the spacer. One slip of a screwdriver and this microscopically thin glass circle shatters into tiny fragments that cannot be removed from the tube. This is only one of many precision operations necessary to assemble the 256 parts of a tube that engineers throughout the tube industry heartily agree is about the most difficult to manufacture.

* * *

Supply of the first bound volume of G-E HAM NEWS, which contained all issues from Volume 1, No. 1 to Volume 5, No. 6, has been exhausted. A second bound volume, which will contain all issues from Volume 6, No. 1, to Volume 10, No. 6, will be published during 1956. Over two hundred people have already asked to be placed on the list reserving a copy for them. If you would like to be notified when this second bound volume will be available, send in your name and mailing address, but please do *not* make any remittance at this time.

Letters in the titles of all the radio club periodicals and bulletins regularly received at the G-E HAM NEWS office would make a good-sized pot of alphabet soup. After browsing through a stack that the editor passed on to me, I notice that "SPARKS" and "NEWS," preceded by the name of the club, seem to be the most popular titles, by far. Some of the more enterprising papers even run a cross-word puzzle!

Seriously, receipt of all these publications enables me to get a pretty good idea of just what is going on, activity-wise, in the far-flung areas of ham-dom. Keep sending them in, fellows!!

* * *

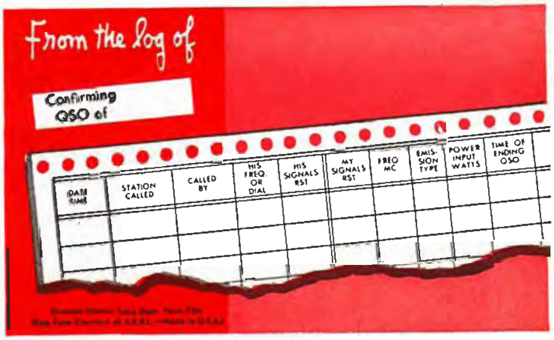

From the log of

Confirming QSO of

DATE TIME	STATION CALLED	CALLED BY	HIS FREQ. OR DIAL	HIS SIGNALS RST	MY SIGNALS RST	FREQ MC	EMISSION TYPE	POWER INPUT WATTS	TIME OF ENDING QSO

Response to my request for opinions on how you liked the idea for the G-E HAM NEWS QSL card (shown above again just in case you missed the picture of it in the last issue) has been terrific. Your answers rolled in by letter, postcard, QSL card and radiogram saying—overwhelmingly . . . YES!! Consequently, packages of 300 QSL cards now are available, for only one dollar, delivered postpaid to your door. We have had the printer wrap them, ready to ship, in packages of 300. Please order them in that quantity, or multiples of it. At this price, we cannot accept orders requesting C.O.D. shipment or billing at a later date. Kindly enclose full remittance with your order.

Radio amateurs in the United States, Canada, Alaska, Hawaii and the Panama Canal Zone should make checks or money orders payable to: Tube Department, General Electric Company, Schenectady 5, New York. In all other countries, write: Lighthouse Larry, International General Electric Company, 570 Lexington Avenue, New York 22, New York.

Several short-wave listeners also voted for these QSL cards, adding another idea to the list of suggested uses we printed in the last issue. Note that there is plenty of space above and below the log form for your call letters, address and remarks. To all those who expressed interest in this project by sending in their comments—A MILLION THANKS!!

—*Lighthouse Larry*

NOMINATIONS NOW OPEN FOR 1955 EDISON AWARD

The Fourth Annual Edison Radio Amateur Award will give you an opportunity to recommend for high honors an amateur who has rendered important public service.

Handsome trophy, a $500 check, and coast-to-coast recognition await the 1955 winner. The panel of judges will consider only candidates nominated by letters from you and others.

Start now to make your selection and assemble the facts for your nominating letter. Read the Award Rules below

Radio Amateurs and their friends are generous in acclaiming accomplishment. No better means for this exists than for you to name . . soon . . a candidate for the Edison Award. Send your letter to Edison Award Committee, General Electric Company, Tube Department, Schenectady 5, N. Y.

RULES OF THE AWARD

WHO IS ELIGIBLE. Any man or woman holding a radio amateur's license issued by the F.C.C., Washington, D.C., who in 1955 performed a meritorious public service in behalf of an individual or group. The service must have been performed while the candidate was pursuing his hobby as an amateur within the continental limits of the United States.

WINNER OF THE AWARD will receive the Edison trophy in a public ceremony in a centrally located metropolitan city. Expenses of his trip to that city will be paid.

$500 GIFT. Winner will be presented with a check for this amount in recognition of the public service he has rendered.

WHO CAN NOMINATE. Any individual, club or association familiar with the service performed.

HOW TO NOMINATE. Include in a letter the candidate's name, address, call letters, and a full description of the service performed. Your letter must be postmarked not later than January 2, 1956.

BASIS FOR JUDGING. All entries will be reviewed by a group of distinguished and impartial judges. Their decisions will be based on (1) the greatest benefit to an individual or group (2) the amount of ingenuity and sacrifice displayed in performing the service.

JUDGES WILL BE

E. ROLAND HARRIMAN, President, The American Red Cross.

HERBERT HOOVER, JR., the Under Secretary, U.S. Department of State.

EDWARD M. WEBSTER, Commissioner, Federal Communications Commission.

GOODWIN L. DOSLAND, President, American Radio Relay League.

Winner of the Award will be announced on or before Thomas A. Edison's birthday, February 11, 1956.

Employees of the General Electric Company may nominate candidates for the Edison Radio Amateur Award, but are not permitted to receive the Award.

Electronic
TUBES

G-E HAM NEWS

Available FREE from

G-E Electronic Tube Distributors

published bi-monthly by

TUBE DEPARTMENT
GENERAL ELECTRIC
Schenectady 5, N. Y.
In Canada
Canadian General Electric Co., Ltd.
Toronto, Ontario

E. A. NEAL, W2JZK—EDITOR

Printed in U.S.A.

VOL. 10—NO. 5

SEPTEMBER–OCTOBER, 1955

Electronic
TUBES

G-E HAM NEWS

TUBE DEPARTMENT
GENERAL ELECTRIC
Schenectady 5, N. Y.

NOVEMBER–DECEMBER, 1955 VOL. 10—NO. 6

A 6-METER SPECTACULAR—Part III

"BONUS 100-WATT" TRANSMITTER

Almost any dictionary will tell you that the word "BONUS" means, "Something given in addition to what is usual." By employing an extra tube, plus a few dual-range tank circuits and parts, this "Bonus 100-watt Transmitter," developed by W2ZHI for Part III of the G-E HAM NEWS 6-meter Spectacular, also puts you on 2 meters with the same power. Front panel controls for all normal tuning, circuit metering, crystal changing and switching, permit this rig to be buttoned up in a complete TVI shield if necessary.

—Lighthouse Larry

CONTENTS

BONUS 100-WATT TRANSMITTER

Most amateur transmitters for 50 or 144 megacycles follow the same frequency range pattern in the first stages of the exciter. Why build two separate units, practically identical, when one exciter can handle both jobs?

And while we're at it, why not design the final amplifier to cover both bands? Of course, the amplifier tube selected would have to be one which works efficiently on the 144-megacycle band, such as the GL-829B. This tube can be run from relatively inexpensive power supplies and plate modulators. Several commercially built 3.5- to 30-megacycle amateur transmitters are marketed in this 100-watt power class. If you are the owner of one of these rigs, you can *borrow* plate and modulation power from it for this "Bonus 100-watt Transmitter." This unit also makes a good exciter for that future one-kilowatt amplifier to help extend your VHF working range after you have installed a rotary beam antenna and a low noise receiver for each band.

CIRCUIT DETAILS

After glancing at the schematic circuit diagram, shown in Fig. 1, you may think that Lighthouse Larry has fallen into a rut by using this pi-network overtone crystal oscillator circuit for the third time in as many issues. But—that's no rut—that's just a good versatile oscillator circuit. One half of a 12AT7 twin-triode oscillates from 24 to 27 megacycles by tuning C_1. Mica padder capacitor C_2 controls the feedback to any one of four 8.000 to 8.222 or 8.334 to 9.000 megacycle crystals. This permits your local network or calling frequency and one other frequency to be covered in each band. The fifth position on crystal selector switch S_1 permits output from an external 8- or 12-megacycle variable frequency oscillator connected to J_1 to be fed into the grid of the oscillator tube, which then operates as a tripler or doubler, respectively.

Tank circuit L_2-C_3 in the plate circuit of the other section of the 12AT7 doubles frequency to the 48–54-megacycle range. A two-band pi-network circuit appears in the plate circuit of the 5763 amplifier-tripler stage. On 144 megacycles, bandswitch S_2 (shown in the 144-megacycle position) connects the output side of coil L_3 to loading capacitor C_7 in the grid circuit of the GL-2E26 144-megacycle amplifier. When S_2 is placed in the 50-megacycle position, L_4 is placed in series with L_3 and loading capacitor C_6 matches the output of this larger pi-network to the amplifier link coaxial cable. This circuit is tuned on both bands with C_4. Mica padder capacitor C_5 and the lead to screen grid pin 6 on the 5763 tube socket form a series-resonant circuit to stabilize this stage when working it as a 50-megacycle amplifier.

A series-tuned 144-megacycle tank circuit in the plate circuit of the GL-2E26 consists of C_9 and L_5. To insure stability, variable capacitor C_8 and its connecting leads provide a series-tuned screen grid neutralization circuit for this stage. This tube is disabled by removing screen voltage and grid excitation when S_2 is in the 50-megacycle position. The bandswitch also increases the grid circuit resistance of the 5763 tripler stage in the 144-megacycle position and transfers the RG-58/U coaxial cable from link L_8 in the grid circuit of the GL-829B amplifier to either the 50-megacycle output from the 5763 or the 144-megacycle output from L_6 in the plate circuit of the GL-2E26 stage. Enough cathode bias is used on these stages to keep the plate dissipation within bounds when no excitation is present.

The problem of working the GL-829B stage on both 50 and 144 megacycles without bandswitches or plug-in coils was solved by using capacity-loaded half-wave-length linear grid and plate tank circuits for 144 megacycles (L_9 and L_{12}). Then, small split coils (L_7 and L_{10}) were tapped onto the lines at the 144-megacycle RF ground point. The inductance of these coils was adjusted to resonate at 50 megacycles with the tube, circuit and tuning capacities. The rotor of plate circuit butterfly variable capacitor C_{11} is not grounded. Otherwise, the 0.030-inch air-gap with which this capacitor is supplied would not be sufficient to withstand positive plate modulation peaks with a 600-volt amplifier plate supply. Variable link coil L_{11} couples the transmitter output to a 50-ohm coaxial cable. A larger coil will be required if the transmitter feeds a 300-ohm line.

A combination clamp-tube and keying circuit in the screen of the GL-829B is formed by the 6V6-GT and OB2 tubes. When the GL-829B is drawing grid current, the 6V6-GT is biased to cut-off and screen current flows through the OB2. Lack of amplifier grid current because of no driving power or removing the grid bias from the 6V6-GT by opening keying circuit jack J_3 permits this tube to draw plate current.

The extra voltage drop through the 20,000-ohm adjustable screen resistor causes the OB2 voltage regulator tube to stop conducting. The GL-829B screen voltage then falls to zero, reducing the plate current to a very low value.

METERING CIRCUITS

In positions A to E, a 2-pole, 6-position rotary tap switch (S_3) connects a 0- to 1-milliammeter in series with a 2000-ohm resistor across shunting resistors placed in series with circuits where current metering is desired. This range meter now costs no more than those with larger current ratings and simplifies the selection of shunting resistors. The 400-ohm shunts in positions A and B provide a 5-milliampere full scale reading for the 5763 and GL-2E26 grid currents. Position C measures up to 100 milliamperes full scale across the 20-ohm resistor in the GL-2E26 plate circuit. The GL-829B grid current is read in position D across a 100-ohm resistor. Two 16-ohm, 1-watt resistors in parallel provide a full scale meter reading of 250 milliamperes in the GL-829B plate circuit in position E.

In the sixth position F, the meter is placed in series with two 390,000-ohm, ½-watt resistors for measuring the amplifier plate supply up to 800 volts. This position could be changed to place the meter across a 20-ohm resistor in the 5763 plate supply lead to provide a 100-milliampere full scale reading, if desired.

MECHANICAL DETAILS

The entire RF unit is mounted on an 8 x 12 x 3-inch deep aluminum chassis, drilled as shown in Fig. 2. The 8 x 14-inch cabinet panel and chassis front are drilled with matching holes. Location of most critical parts is marked on this illustration. The tuning controls for the exciter were mounted along the front edge of the chassis. Space was left at the right side for the GL-829B amplifier and associated tank circuits. The special septar socket (Johnson 122-101) used for this tube has provision for crossed No. 12 plastic insulated neutralizing wires to run from the grid connections through small holes in the ceramic wafer. They extend up the sides of the tube, forming one plate of capacitors C_N, with the tube plates forming the other. The 2⅝-inch diameter hole for this socket was made with a circle cutter. Or, it can also be "nibbled" out with a pair of small tin shears if a *starter* hole is first made with a socket punch.

Amplifier plate tuning capacitor C_{11} mounts on a ¼-inch thick block of polystyrene or lucite 2 inches wide and 1¾ inches high. Three 6–32 x ½-inch deep holes are drilled and tapped in this insulator for mounting screws which run up through the chassis or it can be fastened to a small piece of aluminum angle. The shorter lengths of copper tubing forming part of L_{12} lie in notches cut in the upper corners of this insulator. A right angle bend in the tubing permits the ends to connect to the stator terminals on C_{12}. The other ends of this tubing fasten to 8–32 x 3¼-inch long threaded brass rods mounted on a pair of 1-inch high cone insulators. Lugs formed on the ends of 50-megacycle plate coil L_{10} slip on the threaded rods and fasten with 8–32 brass hex nuts above and below them. This mounting allows L_{10} to be positioned at the 144-megacycle RF ground point on the tank circuit. The longer tubing in L_{12} extends from the top of the threaded rods to the heat radiating plate caps on the **GL-829B** through ¾-inch long flexible strips made from 0.010-inch thick sheet copper flashing material. The metal-to-glass plate pin seals on the **GL-829B** may be cracked if the tubing is attached directly to the plate caps.

Output link coil L_{11} fastens to the rear of a 3-inch long, ¼-inch diameter shaft and panel bearing assembly. A 6–32 x ⅜-inch deep hole is tapped in the end of the shaft for fastening the grounded side of the link. A shaft lock prevents the coupling from changing after adjustment. A box made from perforated sheet aluminum 3½ inches wide, 4½ inches high and 8 inches long encloses the amplifier plate circuit. Several 6–32 self-tapping screws fasten the shield to the back, top and side of the chassis. Inter-stage shielding made from

PARTS LIST

C_1—2.7–19.6-mmf variable (Johnson 20M11)
$C_{2,5,6}$—65–340-mmf mica padder (El Menco 303)
C_3—2.3–14.2-mmf variable (Johnson 15M11)
C_4—1.7–8.7-mmf variable (Johnson 9M11)
C_7—5.0–50-mmf mica trimmer
C_8—6–75-mmf variable (Johnson 75K10)
C_9—2.8–11-mmf variable (Johnson 10L15)
C_{10}—4.3–26-mmf butterfly variable (Johnson 25LB15)
C_{11}—2.8–10.5-mmf butterfly variable (Johnson 10LB15)
$J_{1,2}$—chassis coaxial receptacle
J_3—3-conductor single closed circuit phone jack
RFC_1—1-mh, 100-ma (National R-50)
$RFC_{2,6}$—7-uh choke (Ohmite Z-50)
$RFC_{3,4,5}$—0.84-uh choke (Ohmite Z-144)
S_1—1-pole, 5-position tap switch (Mallory 3215J)
S_2—6-pole, 2-position midget ceramic tap switch (Centralab PA-2019)
S_3—2-pole, 6-position tap switch (Mallory 3226J)
T_1—6.3-volt, 4.5 ampere filament transformer
All capacitors in mmf are 600-volt disk ceramic, capacitors in mfd are 600-volt paper.
All resistors ½-watt, ±10%, unless otherwise specified.

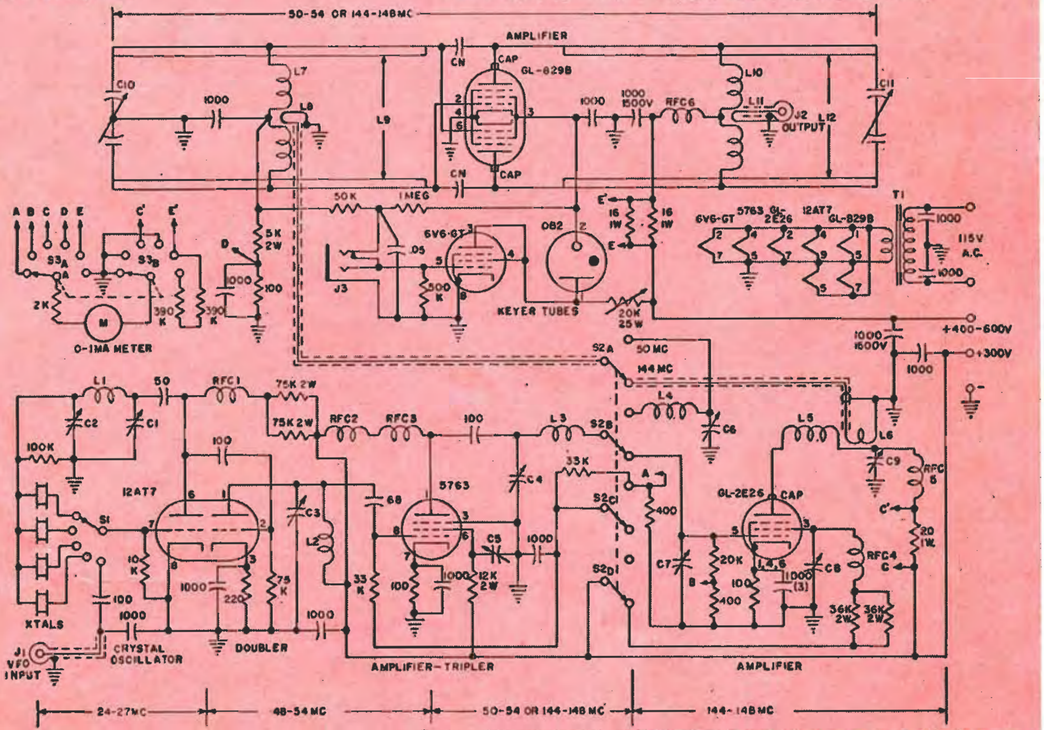

Fig. 1
Schematic diagram.

COIL TABLE

NOTE: Coils L_1, L_2 and L_4 made from B & W Miniductors, type 3007, ⅝-inch diameter, 16 turns per inch. L_1—15 turns, L_2 and L_4—5 turns.
L_3—4 turns, No. 16 solid wire, ½-inch diameter, ⅝-inch long.
L_5—4 turns, No. 12 solid wire, ½-inch diameter, ¾-inch long.
L_6—1 turn loop, No. 12 plastic insulated solid wire, ½-inch diameter.
L_7—1 turn loop, No. 12 solid wire, 1-inch diameter with ¾-inch leads.
L_8—1 turn loop No. 12 plastic insulated solid wire, ¾-inch diameter, with a loop to fit a No. 8 screw on one end.
L_9—12-inch length of 300-ohm flat twinlead, tapped 4 inches from grid end by removing 1 inch of insulation and twisting the wires into ½-inch leads, ½-inch long leads formed at each end.
L_{10}—8 turns, No. 10 solid wire, ¾-inch diameter, formed into 2 4-turn coils, each ½-inch long with a ¼-inch space in center. Loops to fit 8–32 screw spaced 2 inches, formed on each end.
L_{11}—2 turns No. 12 plastic insulated solid wire, ½-inch diameter with a loop to fit a No. 6 screw on one end.
L_{12}—4 lengths of ¼-inch O.D. copper tubing, 2 each, 6 inches long and 5¼ inches long, with ½ inch at each end flattened and drilled to clear a No. 8–32 screw. (See Construction Details.)

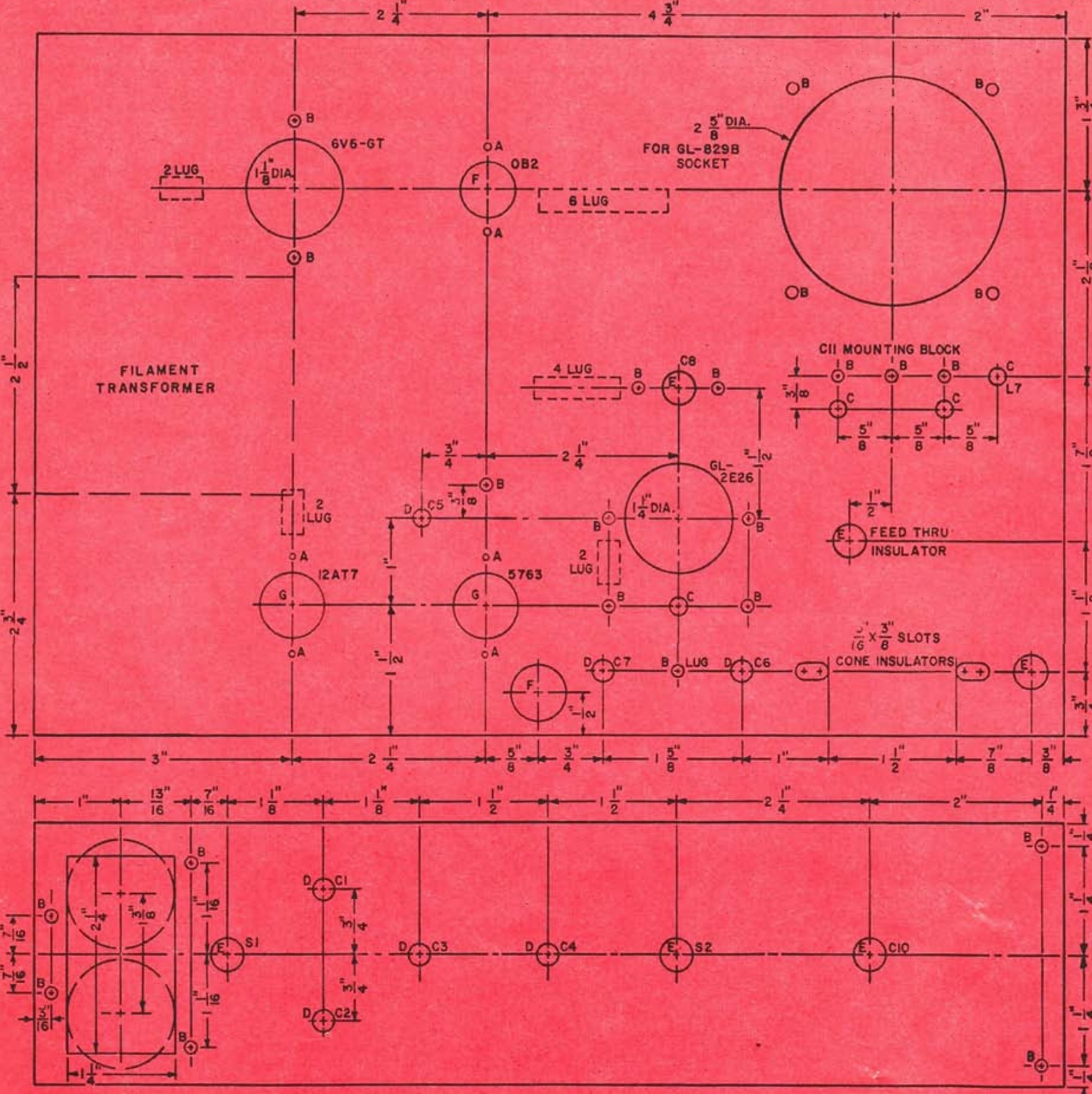

Fig. 2—Chassis drilling diagram. "A" drill—No. 32, "B" drill—No. 26, "C" drill—No. 16, "D" drill—¼-inch diameter, "E" drill—⅜-inch diameter, "F" socket punch—⅝-inch diameter, "G" socket punch—¾-inch diameter. Tie-points mounted at locations indicated by dotted boxes.

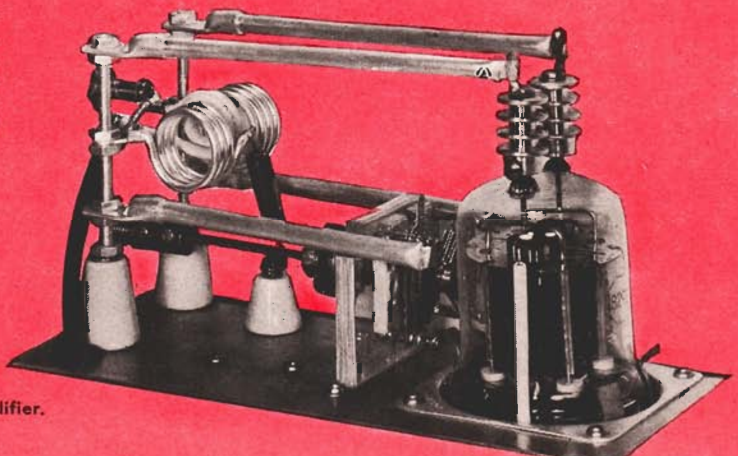

Fig. 3—Side view of GL-829B amplifier.

Fig.4. —Chassis top view. Shield box removed to show the GL-829B tank circuit.

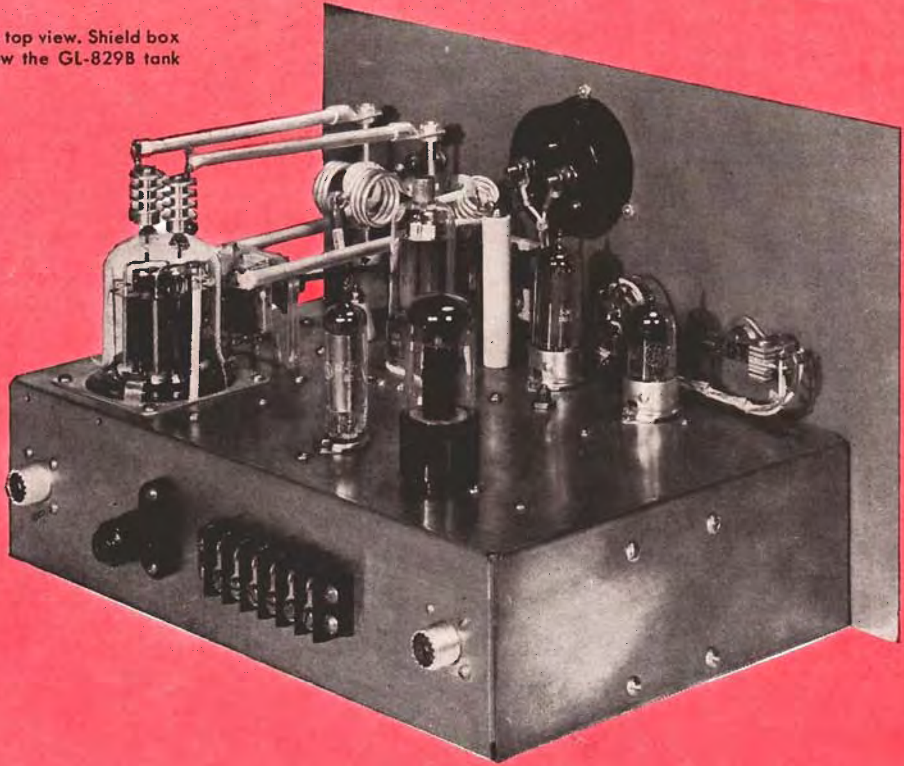

Fig. 5—Chassis bottom view.

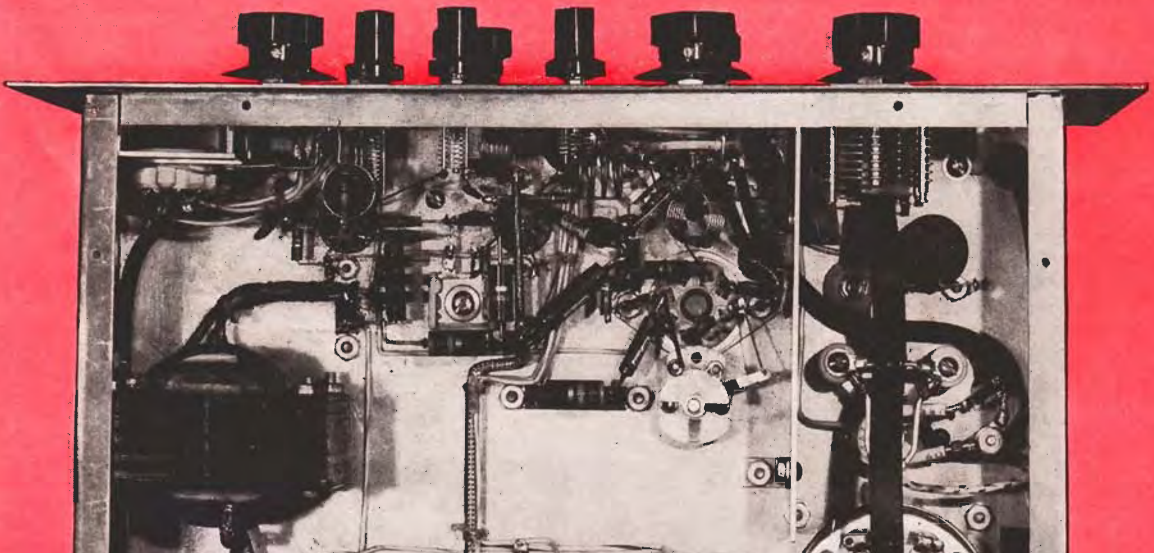

$\frac{1}{16}$-inch thick sheet aluminum 2⅞ x 5¼ inches separates the amplifier grid components from the rest of the under-chassis circuits. Grid circuit tuning capacitor C$_{10}$ mounts on the chassis front. Half-wave grid tank circuit L$_9$, made from 300-ohm flat twin lead, is soldered to lugs fastened to another pair of 1-inch high cone insulators at the point where it is tapped. The ends of this line connect to the grid terminals on the GL-829B socket and to the stator lugs on the grid tuning capacitor, C$_{10}$. Grid coil L$_7$ is soldered to another pair of solder lugs on these insulators. Link coil L$_8$ is fastened to an 8–32 x 1½-inch long machine screw that projects through the chassis for coupling adjustment. A hex-nut on this screw locks the adjustment after tuning the transmitter.

The two crystal octal sockets are positioned so that the crystal holders lie in a horizontal plane. They mount on a 2 x 3 x $\frac{1}{16}$-inch thick aluminum plate which has two 1¼-inch diameter and four No. 26 mounting holes drilled to match the chassis. These parts straddle the 1¼ x 2¼-inch chassis cutout on ¾-inch long spacers slipped over the 6–32 x 1¼-inch long fastening screws. Both the FT-243 and AX-2 type crystal holders will project far enough through the matching slot in the panel to be easily removed. A Mosley type 53 3-gang crystal multi-socket can be substituted if the access and mounting holes are changed accordingly. A *snap-in* cover also made from perforated sheet aluminum helps prevent radiation of 24-megacycle energy from the crystals. The two coaxial cable connectors, power terminal strip and high voltage terminal fasten along the rear side of the chassis, as shown in the bottom view, Fig. 5.

WIRING DETAILS

Shielded hook-up wire is used for all connections from the power connection strip to the parts terminal strips, filament transformer primary and heater leads to the tube sockets. The shield on these leads is grounded at each end and the center conductor on each wire is also by-passed to the shield at the power connection strip. Shortest possible leads are used for all RF and by-pass capacitor connections. Cathode pins 1, 4 and 6 on the GL-2E26 socket each have a separate by-pass capacitor to a chassis ground. Short lengths of RG-58/U coaxial cable are used for connections between the coaxial cable jacks, link coils and switches. Leads supplying plate and *screen* voltages to the 5763 and GL-2E26 should not be connected at this time. All 600-volt leads should have 2000-volt insulation and leads from beneath the chassis to S$_3$ were cabled. When the transmitter is mounted in a suitable table cabinet, further TVI precautions may be necessary only in areas where a fringe-level signal is received from a television station on channel 2.

ADJUSTMENT PROCEDURE

Before any tubes are placed in their sockets, all power should be applied to the transmitter and the socket voltages checked. Next, all tubes and your selection of crystals are inserted. A 144-megacycle range crystal is selected on S$_1$, bandswitch S$_2$ is set in that position and meter selector switch S$_3$ is turned to position "A." Plate and *screen* voltage is applied temporarily to the 5763, but not to the GL-2E26 or GL-829B tubes. With crystal feedback capacitor C$_2$ set about 1 turn from maximum capacity, C$_1$ is rotated until the meter shows a grid current rise in the 5763 stage. Next, C$_2$ is turned slowly toward maximum capacity unti. oscillation stops, then toward minimum capacity until crystal oscillation again starts. Doubler tuning capacitor C$_3$ is adjusted for a sharp rise in 5763 grid current. After turning S$_3$ to position "B," C$_4$, C$_7$ and spacing of the turns on L$_3$ are adjusted for maximum grid current on the GL-2E26, with C$_4$ tuning to resonance near minimum capacity.

To neutralize the GL-2E26, capacitor C$_8$ is adjusted until there is no fluctuation in grid current as plate tuning capacitor C$_9$ is rotated. If this stage will not neutralize with a straight lead from the socket screen terminal to C$_8$, a small loop in this lead may be necessary. The plate and screen voltage lead to this tube is now connected and S$_3$ is moved to position "C." The turn spacing of L$_5$ is adjusted so that C$_9$ resonates with this coil near ⅓ of maximum capacity. Link coil L$_6$ is now inserted at the end of L$_5$ attached to C$_9$. After setting S$_3$ to position "D," C$_{10}$ and L$_8$ are adjusted for maximum grid current on the GL-829B. Length of the L$_9$ twin lead is adjusted to tune with C$_{10}$ near minimum capacity. Link coil L$_6$ is then cemented in place.

The GL-829B is now neutralized by checking the grid current fluctuation as neutralizing wires C$_N$ are slowly bent away from the tube while tuning plate circuit capacitor C$_{11}$. On the test model, these wires were clipped off until neutralization was obtained with the wires close to the glass envelope, 1½ inches above the ceramic socket wafer. Plate voltage is then applied to this tube and a suitable 50-ohm dummy load connected to coaxial output connector J$_2$. Resonance near the minimum capacity setting of C$_{11}$ should be established by adjusting the spacing of the L$_{12}$ copper tubing by moving the supporting cone insulators in their fastening slots, shifting the tubing ends on the C$_{11}$ stator lugs and changing the length of the flexible straps on the plate caps, if necessary. The tank circuit cover should be in place after each adjustment, as this added capacity to ground lowers the resonant frequency about 10 megacycles.

For 50-megacycle operation, S$_1$ and S$_2$ are set in that position, S$_3$ is turned back to position "A" and the plate and *screen* voltage is removed from the 5763 tube. The oscillator and doubler are re-tuned and output capacitor C$_6$ is set near maximum capacity. The 5763 stage is neutralized by adjusting C$_5$ for no grid current fluctuation when C$_4$ is rotated. Some adjustment of the 1-turn loop from C$_5$ to the tube socket may be necessary for complete neutralization. After again connecting plate and screen voltages to this stage, S$_3$ is set at position "D" and both C$_4$ and C$_6$ are adjusted for maximum grid current on the GL-829B. Sufficient driving power should be obtained with the same setting of L$_8$ used for 144 megacycles. Inductance of both L$_7$ and L$_{10}$ is adjusted so that 50-megacycle resonance on C$_{10}$ and C$_{11}$ occurs near the maximum capacity settings. A strong third harmonic of the 50-megacycle output from the amplifier may result if the tank circuits are not adjusted in this manner. The 20,000-ohm adjustable screen voltage dropping resistor should be set to obtain 200 volts on pin 2 of the OB2 regulator tube when the amplifier is running at the normal 600-volt, 170-milliampere CW input.

The measured plate circuit efficiency of the GL-829B on 144 megacycles was 64% when the transmitter was fed into a laboratory-type RF wattmeter. Apparently due to the rather bulky tank circuits, the amplifier efficiency dropped to 60% on 50 megacycles. For comparison purposes, another GL-829B amplifier was constructed using conventional 50-megacycle tank circuits and driven from the same exciter. The measured efficiency of this amplifier was checked at 66%. This slight difference in efficiency will not be noticeable when the transmitter is put on the air. In conclusion, the saving in parts cost of being able to utilize this transmitter on two widely separated bands where normally separate units are used was considered to be well worth the slight compromise mentioned above. For final "dressing up," Johnson type 116–222–5 line-indicator dials were mounted on the controls shown in the cover view. Also used were 3 type 116–214–2 knobs which fit the $\frac{3}{16}$-inch diameter shafts on the midget type "M" capacitors. Panel marking and dial decals label the controls and frequency ranges covered.

SWEEPING *the* SPECTRUM

If all of my Log Form QSL cards (see this column in Volume 10, Nos. 4 and 5 issues of G-E HAM NEWS, for details and illustration) that were printed in the first press run were placed in a single pile, the resulting stack of cards would equal the size of a radio amateur's "dream" antenna tower, almost 500 feet high!! The flood of orders we have received for these cards is whittling that pile down pretty fast. A surprising number of requests have arrived for 600, 900, 1200, 1500 and in one instance, 6600 cards!

If you have the need for an inexpensive QSL card on which you can copy information in the same order that it appears in your station log, simply write me at the Tube Department, General Electric Company, Schenectady 5, N. Y. Packages of 300 cards, or any multiple of that number, will be delivered to you, postpaid, for a remittance of one dollar per 300 cards. At this price, we cannot accept requests for C.O.D. shipment or billing at a later date. The above address applies only to radio amateurs in the United States, Canada, Alaska, Hawaii and the Panama Canal Zone. In all other countries, write: Lighthouse Larry, International General Electric Company, 570 Lexington Avenue, New York 22, N. Y.

Incidentally, before you write, check through your file of back issues of G-E HAM NEWS. If any are missing, just tell me which copies you need and I will gladly send them to you as long as my supply lasts.

* * *

One of the first orders for my Log Form QSL card was received from a true "Hamm" family. In fact, both the OM and XYL are "C. W. Hamms." I really mean Carl W. Hamm, W9DWH (Dad Works Hard) and Charlotte W. Hamm, WN9UNY (Until Next Year), of Milwaukee, Wisconsin. They also have an eight-year old junior op, Jeffry C., who may be labelled, "Junior Class," when he gets his ham ticket. Carl works 7-megacycle CW and phone and 28-megacycle phone. Charlotte can be heard in the 7-megacycle novice band. They are now looking for a contact with W4-NYX, of Shelby, North Carolina. Why? He is Clyde W. Ham!

* * *

Does your basement-level radio shack suffer from excessive humidity that plays havoc with receiver and VFO calibration? A recent copy of the REA NEWS, published by the Saint Paul (Minnesota) Mobile Radio Club, suggests that you can help keep your equipment dried out by getting on the air daily! The main idea is to keep the temperature of the equipment or basement a few degrees above the dew point, below which condensation of water vapor in the air occurs. Placing a few light bulbs in your equipment cabinets may be all that's necessary to keep out the dampness. An electric de-humidifier also will do a good job. By all means, vent that automatic clothes dryer to the outside—some types release vast amounts of moisture into the air.

* * *

After recently receiving comments from a few fellows that they have been unable to buy the type 6CA5 audio power amplifier tube used in the HAM-SHACK INTERCOM described in the May-June, 1955 issue of G-E HAM NEWS, I decided that the situation needed checking into. Result—our receiving tube sales section says that there is not a large replacement demand for this tube and it may not be readily available. Fortunately, the electrical characteristics are similar to the more popular 6BF5, except for a lower power sensitivity. The only changes necessary to use this tube will be to reverse connections to pin 1 and 2 on the 6CA5 socket and change the lead from output transformer T_2 from pin 7 to pin 5.

I suppose that by now a number of these units may have been built using other output tubes that happened to be handy in the junk box. By applying the appropriate voltages, types 6AQ5, 6V6-GT or 6K6-GT might be used. Even a 6L6-GB might be your *bottle* if the local QRM is high!

* * *

I asked the editor the other day why most recent gear built for G-E HAM NEWS has included a small square of *do-it-yourself* perforated aluminum sheet. "Well," he said, "That particular type of aluminum has a pleasing decorative pattern, is easy to cut and bend with hand tools and makes a pretty good RF shield." Note that a complete shield of this material surrounds the GL-829B amplifier on the "Bonus 100" transmitter in this issue. Then he gave me a sneak preview of some of the equipment which is scheduled to appear in future issues of G-E HAM NEWS—and this material is used for shielding in several places. So, here's a tip straight from Lighthouse Larry. Keep a sheet of that stuff handy at your workbench if you intend to try your hand at some of our latest designs. The boss won't rest until he has used it all up!

* * *

The editor of one of the larger amateur radio club bulletins says that he is considering the possibilities of a stacked array of folded dipoles for 2400 MC. Want to know the source of the material? His 300-ohm feedline got caught in the power lawn mower.

Gang—just a reminder that the deadline for entering nominations in the Fourth Annual Edison Radio Amateur Award is January 3, 1956. Complete details were published on page one of the September and October issues of QST, September issue of CQ and on page 8 of the September–October issue of G-E HAM NEWS. Or, you can obtain a copy of the rules by dropping me a postcard. The award means national recognition and a nice cash bonus for the winner. Send those nominations in now to the Edison Award Committee, General Electric Company, Tube Department, Schenectady 5, N. Y.

—*Lighthouse Larry*

OPERATION CRYSTAL

Several interesting construction hints about the preparation of small to medium sized plastic boxes to house crystal radios have been passed along by L. B. Cebik, W1APS, of Stratford, Connecticut. Their transparency, shock resistance and low cost make them almost ideal if the following precautions are observed.

When drilling holes in the plastic, small cracks may appear in that area. To avoid this, a wire or rod of the proper diameter is heated with a soldering iron or flame and pressed through the plastic. This method can also be used for wire leads that must pass through the case. Larger holes for control shafts can be cut with a razor blade. Instead of using bolts (and holes) to mount coil forms or small parts, cement them in place with household cement. Larger diameter coils can be wound directly on the outside or inside of the plastic box, with the turns cemented in place. Control knobs and terminals can be located on an unused side of the case.

"Where will your crystal set be when an emergency comes? On some forgotten shelf or buried in the junk box? Not mine!" —says H. G. Weist, Jr., K2AWA, of Schenectady, N. Y. "My crystal radio is patch-corded to the phono-input jack of the family television receiver. It is used almost daily to get news and other special radio programs from the local broadcast station. Being in constant use, I will have no trouble finding it and putting it to good use if and when the time comes—. Remember—you can't use it if you can't find it!"

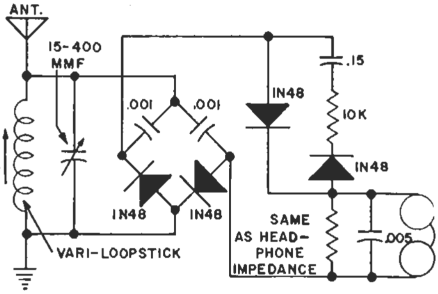

The bridge circuit detector plus *diode network* circuit shown above is your meat if your late rich Uncle Sparky bequeathed you a shoebox full of crystal diodes. Increased output was measured when the headphones were connected as shown over that obtained when the 'phones were connected across the output of the bridge detector. Drop me a line if you have a good explanation. Any old broadcast type variable capacitor can be used for tuning across the vari-loopstick coil, or you can substitute your favorite antenna input circuit for his, says Philip Benedict, ex-WN8KKR, of Columbus, Ohio.

All ideas submitted before December 1, 1955, will be eligible for publication in the OPERATION CRYSTAL Column. (See G-E HAM NEWS, Volume 10, No. 1.) **Do not send in your model!** Submitters of the three ideas published in each issue receive certificates for $10 in G-E Electronic Tubes. **Be sure to give complete coil-winding data for home-wound coils.** All material submitted must be free from patent restrictions and becomes the property of G-E HAM NEWS.

—*Danny Diode*

GE Electronic TUBES

G-E HAM NEWS
Available FREE from
G-E Electronic Tube Distributors

published bi-monthly by
TUBE DEPARTMENT
GENERAL ELECTRIC
Schenectady 5, N. Y.
In Canada
Canadian General Electric Co., Ltd.
Toronto, Ontario

E. A. NEAL, W2JZK—EDITOR

Printed in U.S.A.

VOL. 10—NO. 6

NOVEMBER—DECEMBER, 1955

Electronic TUBES

G-E HAM NEWS

TUBE DEPARTMENT
GENERAL ELECTRIC
Schenectady 5, N. Y.

JANUARY–FEBRUARY, 1956

VOL. 11—NO. 1

DX LOG

Check List for States, Call Areas, Zones, Continents & Official Countries

STATE CHECK LIST

State	Station Worked	Date	Band	A1 A3	QSL	
					Sent	Rec'd
Alabama						
Arizona						
Arkansas						
California						
Colorado						
Connecticut						
Delaware						
Florida						
Georgia						
Idaho						
Illinois						
Indiana						
Iowa						
Kansas						
Kentucky						
Louisiana						
Maine						
Maryland						
Massachusetts						
Michigan						
Minnesota						
Mississippi						
Missouri						
Montana						
Nebraska						
Nevada						
New Hampshire						
New Jersey						
New Mexico						
New York						
N. Carolina						
N. Dakota						
Ohio						
Oklahoma						
Oregon						
Pennsylvania						
Rhode Island						
S. Carolina						
S. Dakota						
Tennessee						
Texas						
Utah						
Vermont						
Virginia						
Washington						
West Virginia						
Wisconsin						
Wyoming						

CALL AREA CHECK LIST

Call Area	Station Worked	Date	Band	A1 A3	QSL	
					Sent	Rec'd
1						
2						
3						
4						
5						
6						
7						
8						
9						
0						

CONTINENT CHECK LIST

Continent	Station Worked	Date	Band	A1 A3	QSL	
					Sent	Rec'd
Africa						
Asia						
Europe						
N. America						
S. America						
Oceania						

Good Hunting!

—*Lighthouse Larry*

ZONE CHECK LIST

Zone	Station Worked	Date	Band	A1 A3	QSL	
					Sent	Rec'd
1						
2						
3						
4						
5						
6						
7						
8						
9						
10						
11						
12						
13						
14						
15						
16						
17						
18						
19						
20						

Zone	Station Worked	Date	Band	A1 A3	QSL	
					Sent	Rec'd
21						
22						
23						
24						
25						
26						
27						
23						
29						
30						
31						
32						
33						
34						
35						
36						
37						
38						
39						
40						

OFFICIAL COUNTRIES

Prefix	Country	Continent	Station Worked	Date	Band	A1 A3	QSL	
							Sent	Rec'd
AC3	Sikkim	Asia						
AC4	Tibet	Asia						
AP	Pakistan	Asia						
BV, C3	Formosa	Asia						
C[1]	China	Asia						
C9	Manchuria	Asia						
CE	Chile	S. America						
CE7Z-, LU-Z, VK1, VP8	Antarctica	Africa, Oceania & S. America						
CE0	Easter Island	S. America						
CM, CO	Cuba	N. America						
CN2, KT1	Tangier Zone	Africa						
CN8	French Morocco	Africa						
CO	(See CM)							
CP	Bolivia	S. America						
CR4	Cape Verde Islands	Africa						
CR5	Portugese Guinea	Africa						
CR5	Principe, Sao Thome	Africa						
CR6	Angola	Africa						
CR7	Mozambique	Africa						
CR8	Goa (Portugese India)	Asia						
CR9	Macau	Asia						
CR10	Portugese Timor	Oceania						
CS3, CT2	Azores Islands	Europe						
CT1	Portugal	Europe						
CT3	Madeira Islands	Africa						
CX	Uruguay	S. America						
DJ, DL, DM	Germany	Europe						
DU	Philippine Islands	Asia						
EA	Spain	Europe						
EA6	Balearic Islands	Europe						

OFFICIAL COUNTRIES

Prefix	Country	Continent	Station Worked	Date	Band	A1 A3	QSL	
							Sent	Rec'd
EA8	Canary Islands	Africa						
EA9	Ifni	Africa						
EA9	Rio de Oro	Africa						
EA9	Spanish Morocco	Africa						
EA0	Spanish Guinea	Africa						
EI	Republic of Ireland	Europe						
EL	Liberia	Africa						
EQ[2]	Iran (Persia)	Asia						
ET2	Eritrea	Africa						
ET3	Ethiopia	Africa						
F	France	Europe						
FA	Algeria	Africa						
FB8	Amsterdam & St. Paul Islands	Africa						
FB8	Kerguelen Islands	Africa						
FB8	Madagascar	Africa						
FC	Corsica	Europe						
FD	French Togoland	Africa						
FE8	French Cameroons	Africa						
FF8	French West Africa	Africa						
FG	Guadeloupe	N. America						
FG	Saint Martin	N. America						
FI8[2]	French Indo-China	Asia						
FK8	New Caledonia	Oceania						
FKS8	(See OE)							
FL8	French Somaliland	Africa						
FM	Martinique	N. America						
FN5	French India	Asia						
FO8	Clipperton Island	N. America						
FO8	French Oceania (e.g. Tahiti)	Oceania						
FP8	St. Pierre & Miquelon Islands	N. America						
FQ8	French Equatorial Africa	Africa						
FR7	Reunion Island	Africa						
FU8, YJ	New Hebrides	Oceania						
FW8	Wallis & Futuna Islands	Oceania						
FY7	French Guiano & Inini	S. America						
G	England	Europe						
GC	Channel Islands	Europe						
GD	Isle of Man	Europe						
GI	Northern Ireland	Europe						
GM	Scotland	Europe						
GW	Wales	Europe						
HA	Hungary	Europe						
HB1, HB9	Switzerland	Europe						
HC	Equador	S. America						
HC8	Galapagos Islands	S. America						
HE	Liechtenstein	Europe						
HH	Haiti	N. America						
HI	Dominican Republic	N. America						
HK	Columbia	S. America						
HK0	Archipelago of San Andres & Providencia	S. America						
HL[2]	Korea	Asia						
HP	Panama	N. America						
HR	Honduras	N. America						
HS	Siam	Asia						
HV	Vatican City	Europe						
HZ	Saudi Arabia (Hedjaz & Nejd)	Asia						
I1	Italy	Europe						

OFFICIAL COUNTRIES

Prefix	Country	Continent	Station Worked	Date	Band	A1 A3	QSL	
							Sent	Rec'd
I1	Trieste	Europe						
I5, MS4	Italian Somaliland	Africa						
IS1	Sardinia	Europe						
JA, KA	Japan	Asia						
JY, ZC7	Jordan	Asia						
JZ0	Netherlands New Guinea	Oceania						
K, W	United States of America	N. America						
KA	(See JA)							
KA0	Bonin & Volcano Islands	Asia						
KB6	Baker, Howland & American Phoenix Islands	Oceania						
KC4	Navassa Island	N. America						
KC6	Eastern Caroline Islands	Oceania						
KC6	Western Caroline Islands	Oceania						
KG1	(See OX)							
KG4	Guantanamo Bay	N. America						
KG6	Mariana Island	Oceania						
KH6	Hawaiian Islands	Oceania						
KJ6	Johnston Island	Oceania						
KL7	Alaska	N. America						
KM6	Midway Islands	Oceania						
KP4	Puerto Rico	N. America						
KP6	Palmyra Group, Jarvis Island	Oceania						
KR6	Ryukyu Islands (e.g. Okinawa)	Asia						
KS4	Swan Island	N. America						
KS6	American Samoa	Oceania						
KT1	(See CN2)							
KV4	Virgin Islands	N. America						
KW6	Wake Island	Oceania						
KX6	Marshall Islands	Oceania						
KZ5	Canal Zone	N. America						
LA, LB	Jan Mayen	Europe						
LA, LB	Norway	Europe						
LA, LB	Svalbard (Spitzenberg)	Europe						
LU	Argentina	S. America						
LU-Z	(See CE7Z-, VK1, VP8)							
LX	Luxembourg	Europe						
LZ	Bulgaria	Europe						
M1	San Marino	Europe						
MB9	(See OE)							
MP4	Bahrein Island	Asia						
MP4	Kuwait	Asia						
MP4	Qatar	Asia						
MP4	Trucial Oman	Asia						
MS4	(See I5)							
OA	Peru	S. America						
OD5	Lebanon	Africa						
OE, MB9, FKS8	Austria	Europe						
OH	Finland	Europe						
OK	Czechoslovakia	Europe						
ON4	Belgium	Europe						
OQ5, OQ0	Belgian Congo	Africa						
OX, KG1	Greenland	N. America						
OY	Faeroes	Europe						
OZ	Denmark	Europe						
PA0	Netherlands	Europe						
PJ2	Netherlands West Indies	S. America						
PJ2M-	Sint Maarten	N. America						

OFFICIAL COUNTRIES

Prefix	Country	Continent	Station Worked	Date	Band	A1 A3	QSL	
							Sent	Rec'd
PK[2]	Republic of Indonesia	Oceania						
PK1, 2, 3	Java	Oceania						
PK4	Sumatra	Oceania						
PK5	Netherlands Borneo	Oceania						
PK6	Celebes & Molucca Islands	Oceania						
PX	Andorra	Europe						
PY	Brazil	S. America						
PZ1	Netherlands Guiana	S. America						
SM	Sweden	Europe						
SP	Poland	Europe						
ST	Anglo-Egyptian Sudan	Africa						
SU	Egypt	Africa						
SV	Greece	Europe						
SV	Crete	Europe						
SV	Dodecanese (e.g. Rhodes)	Europe						
TA	Turkey	Asia						
TF	Iceland	Europe						
TG	Guatemala	N. America						
TI	Costa Rica	N. America						
TI9	Cocos Island	N. America						
UA1, 3, 4, 6	Russian Socialist Federated Soviet Republic	Europe						
UA9, UA0	Asiatic Russian S.F.S.R.	Asia						
UB5	Ukraine	Europe						
UC2	White Russian Soviet Socialist Republic	Europe						
UD6	Azerbaijan	Asia						
UF6	Georgia	Asia						
UG6	Armenia	Asia						
UH8	Turkoman	Asia						
UI8	Uzbek	Asia						
UJ8	Tadzhik	Asia						
UL7	Kazakh	Asia						
UM8	Kirghiz	Asia						
UN1	Karelo-Finnish Republic	Europe						
UO5	Moldavia	Europe						
UP2	Lithuania	Europe						
UQ2	Latvia	Europe						
UR2	Estonia	Europe						
VE, VO[3]	Canada	N. America						
VK	Australia (inc. Tasmania)	Oceania						
VK1	(See CE7Z-, LU-Z, VP8)							
VK1	Heard Island	Oceania						
VK1	Macquarie Island	Oceania						
VK9	Norfolk Island	Oceania						
VK9	Papua Territory	Oceania						
VK9	Territory of New Guinea	Oceania						
VO[3]	(See VE)							
VP1	British Honduras	N. America						
VP2	Leeward Islands	N. America						
VP2	Windward Islands	N. America						
VP3	British Guiana	S. America						
VP4	Trinidad & Tobago	S. America						
VP5	Cayman Islands	N. America						
VP5	Jamaica	N. America						
VP5	Turks & Caicos Islands	N. America						
VP6	Barbados	N. America						
VP7	Bahama Islands	N. America						

OFFICIAL COUNTRIES

Prefix	Country	Continent	Station Worked	Date	Band	A1 A3	QSL	
							Sent	Rec'd
VP8	(See CE7Z-, LU-Z, VK1)							
VP8	Falkland Islands	S. America						
VP8	South Georgia	S. America						
VP8, LU-Z	South Orkney Islands	S. America						
VP8	South Sandwich Islands	S. America						
VP8, LU-Z	South Shetland Islands	S. America						
VP9	Bermuda Islands	N. America						
VQ1	Zanzibar	Africa						
VQ2	Northern Rhodesia	Africa						
VQ3	Tanganyika Territory	Africa						
VQ4	Kenya	Africa						
VQ5	Uganda	Africa						
VQ6	British Somaliland	Africa						
VQ8	Chagos Islands	Africa						
VQ8	Mauritius	Africa						
VQ9	Seychelles	Africa						
VR1	Gilbert, Ellice & Ocean Islands	Oceania						
VR1	British Phoenix Islands	Oceania						
VR2	Fiji Islands	Oceania						
VR3	Fanning Is. (Christmas Is.)	Oceania						
VR4	Solomon Islands	Oceania						
VR5	Tonga (Friendly) Islands	Oceania						
VR6	Pitcairn Island	Oceania						
VS1	Singapore	Asia						
VS2	Malaya	Asia						
VS4	Sarawak	Oceania						
VS5	Brunei	Oceania						
VS6	Hong Kong	Asia						
VS9	Aden & Socotra	Asia & Africa						
VS9	Maldive Islands	Asia						
VS9	Sultanate of Oman	Asia						
VU2	India	Asia						
VU4	Laccadive Islands	Asia						
VU5	Andaman & Nicobar Islands	Asia						
W	(See K, W)							
XE	Mexico	N. America						
XW8	Laos	Asia						
XZ2	Burma	Asia						
YA	Afghanistan	Asia						
YI	Iraq	Asia						
YJ	(See FU8)							
YK	Syria	Asia						
YN	Nicaragua (Corn Islands)	N. America						
YO	Roumania	Europe						
YS	Salvador	N. America						
YU	Yugoslavia	Europe						
YV	Venezuela	S. America						
ZA	Albania	Europe						
ZB1	Malta	Europe						
ZB2	Gibraltar	Europe						
ZC2	Cocos Island	Oceania						
ZC3	Christmas Island	Oceania						
ZC4	Cyprus	Asia						
ZC5	British North Borneo	Oceania						
ZC6	Palestine	Asia						
ZC7	(See JY)							
ZD1	Sierra Leone	Africa						
ZD2	Nigeria	Africa						

OFFICIAL COUNTRIES

Prefix	Country	Continent	Station Worked	Date	Band	A1 A3	QSL	
							Sent	Rec'd
ZD3	Gambia	Africa						
ZD4	Gold Coast, Togoland	Africa						
ZD6	Nyasaland	Africa						
ZD7	Saint Helena	Africa						
ZD8	Ascension Island	Africa						
ZD9	Tristan da Cunha & Gough Is.	Africa						
ZE	Southern Rhodesia	Africa						
ZK1	Cook Islands	Oceania						
ZK2	Niue	Oceania						
ZL	Kermadec Islands	Oceania						
ZL	New Zealand	Oceania						
ZM6	British Samoa	Oceania						
ZM7	Tokelau (Union) Islands	Oceania						
ZP	Paraguay	S. America						
ZS1, 2, 4, 5, 6	Union of South Africa	Africa						
ZS2	Marion Island	Africa						
ZS3	Southwest Africa	Africa						
ZS7	Swaziland	Africa						
ZS8	Basutoland	Africa						
ZS9	Bechuanaland	Africa						
3A	Monaco	Europe						
3V8	Tunisia	Africa						
3W8[2]	Cambodia	Asia						
3W8[2]	Viet Nam	Asia						
4S7	Ceylon	Asia						
4W1	Yemen	Asia						
4X4	Israel	Asia						
5A	Libya	Africa						
9S4	Saar	Europe						
(No regularly assigned prefixes.)	Aldabra Islands	Africa						
	Bhutan	Asia						
	Comoro Islands	Africa						
	Fridtjof Nansen Land (Franz Josef Land)	Europe						
	Mongolia	Asia						
	Nepal	Asia						
	Wrangel Islands	Asia						

(1) *ARRL lists this prefix as "unofficial" but will recognize it for DXCC credit.*
(2) *Communication with U.S. amateurs banned—check status in QST, "DXCC Notes." No credit given for DXCC and DX contest credit.*
(3) *Newfoundland and Labrador DXCC credit will be given if VO contact was made prior to April 1, 1949.*
(4) *No regularly assigned prefixes. See end of "Official Countries" list.*
(5) *No credit given for DXCC after Nov. 1, 1954.*

CROSS INDEX

Aden, VS9
Afghanistan, YA
Alaska, KL7
Albania, ZA
Aldabra Islands[4]
Algeria, FA
Amsterdam & St. Paul Is., FB8
Andaman Islands, VU5
Andorra, PX
Angola, CR6
Antarctica, CE7Z-, LU-Z, VK1, VP8
Arabia, Saudi, HZ
Argentina, LU
Armenia, UG6
Ascension Island, ZD8
Asiatic R.S.F.S.R., UA9, UA0
Australia, VK
Austria, OE, MB9, FKS8
Azerbaijan, UD6
Azores Islands, CS3, CT2

Bahama Islands, VP7
Bahrein Island, MP4
Baker Island, KB6
Balearic Islands, EA6
Barbados, VP6
Basutoland, ZS8
Bechuanaland, ZS9
Belgian Cango, OQ5, OQ0
Belgium, ON4
Bermuda Islands, VP9
Bhutan,[4]
Bolivia, CP
Bonin & Volcano Is., KA0
Borneo, British North, ZC5
Borneo, Netherlands, PK5
Brazil, PY
Brunei, VS5
Bulgaria, LZ
Burma, XZ2

Caicos Islands, VP5
Cambodia, 3W8
Cameroons, French, FE8
Canada, VE, VO
Canal Zone, KZ5
Canary Islands, EA8
Cape Verde Islands, CR4
Caroline Is., Eastern, KC6
Caroline Is., Western, KC6
Cayman Islands, VP5
Celebes Islands, PK6
Ceylon, 4S7
Chagos Islands, VQ8
Channel Islands, GC
Chile, CE
China, C
Christmas Island, ZC3
Christmas Is. (Fanning), VR3
Clipperton Island, FO8
Cocos Island, TI9
Cocos Islands, ZC2

Columbia, HK
Comoro Islands[4]
Cook Islonds, ZK1
Corn Islands, YN
Corsica, FC
Costa Rica, TI
Crete, SV
Cuba, CM, CO
Cyprus, ZC4
Czechoslovakia, OK

Denmark, OZ
Dodecanese, SV
Dominican Republic, HI

Easter Is., CE0
Egypt, SU
Ellice Islands, VR1
England, G
Equador, HC
Eritrea, ET2

Estonia, UR2
Ethiopia, ET3
European R.S.F.S.R., UA1, 3, 4, 6

Faeroes, OY
Falkland Islands, VP8
Fanning Islands, VR3
Fiji Islands, VR2
Finland, OH
Formosa, BV, C3
France, F
Franz Joseph Land[4]
French Equatorial Africa, FQ8
French India, FN
French Indo-China, FI8
French Oceania, FO8
French West Africa, FF8
Fridtjof Nansen Land[4]
Friendly Islands, VR5
Futuna Islands, FW8

Galapagos Islands, HC8

CROSS INDEX (cont'd)

Gambia, ZD3
Georgia, UF6
Germany, DJ, DL, DM
Gibraltar, ZB2
Gilbert Islands, VR1
Goa (Portugese India), CR8
Gold Coast (Togoland), ZD4
Gough Island, ZD9
Greece, SV
Greenland, OX, KG1
Guadeloupe, FG
Guantanamo Bay, KG4
Guatemala, TG
Guiana, British, VP3
Guiana, French, FY7
Guiana, Netherlands, PZ1
Guinea, Portugese, CR5
Guinea, Spanish, EA0

Haiti, HH
Hawaiian Islands, KH6
Heard Island, VK1
Hedjaz, HZ
Honduras, HR
Honduras, British, VP1
Hong Kong, VS6
Howland Island, KB6
Hungary, HA

Iceland, TF
Ifni, EA9
India, VU2
Indonesia, Rep. of, PK
Inini, FY7
Iran (Persia), EQ
Iraq, YI
Ireland, Northern, GI
Ireland, Rep. of, EI
Isle of Man, GD
Israel, 4X4
Italy, I1

Jamaica, VP5
Jan Mayen, LA, LB
Japan, JA, KA
Jarvis Is., KP6
Java, PK1, 2, 3
Johnston Island, KJ6

Jordan, JY, ZC7

Karelo-Finnish Rep., UN1
Kazakh, UL7
Kenya, VQ4
Kerguelen Islands, FB8
Kermodec Islands[4]
Kirghiz, UM8
Korea, HL
Kuwait, MP4

Laccadive Islands, VU4
Laos, XW8
Latvia, UQ2
Lebanon, OD5
Leeward Islands, VP2
Liberia, EL
Libya, 5A
Liechtenstein, HE
Lithuania, UP2
Luxembourg, LX

Macau, CR9
Macquarie Island, VK1
Madagascar, FB8
Madeira Islands, CT3
Malaya, VS2
Moldive Islands, VS9
Malta, ZB1
Manchuria, C9
Mariana Islands, KG6
Marion Island, ZS2
Marshall Islands, KX6
Martinique, FM
Mauritius, VQ8
Mexico, XE
Midway Islands, KM6
Miquelon Island, FP8
Moldavia, UO5
Molucca Islands, PK6
Monaco, 3A
Mongolia, (4)
Morocco, French, CN8
Morocco, Spanish, EA9
Mozambique, CR7

Navassa Island, KC4
Nejd, HZ

Nepal[4]
Netherlands, PA0
Netherlands West Indies, PJ2
New Caledonia, FK8
New Guinea, Netherlands, JZ0
New Guinea Terr., VK9
New Hebrides, FU8, YJ
New Zealand, ZL
Nicaragua (Corn Islands), YN
Nicobar Islands, VU5
Nigeria, ZD2
Niue, ZK2
Norfolk Island, VK9
Norway, LA, LB
Nyasaland, ZD6

Ocean Islands, VR1
Okinawa, Ryukyu Is., KR6
Oman, Sultanate of, VS9
Oman, Trucial, MP4

Pakistan, AP
Palestine, ZC6
Palmyra Group, KP6
Panama, HP
Papua Territory, VK9
Paraguay, ZP
Persia (Iran), EQ
Peru, OA
Philippine Islands, DU
Phoenix Island, American, KB6
Phoenix Islands, British, VR1
Pitcairn Island, VR6
Poland, SP
Portugal, CT1
Portugese India, CR8
Principe Islands, CR5
Puerto Rico, KP4

Qatar, MP4

Reunion Island, FR7
Rhodes, SV
Rhodesia, Northern, VQ2
Rhodesia, Southern, ZE
Rio de Oro, EA9
Roumania, YO

Russia, UA1-UR2
Ryukyu Is., Okinawa, KR6

Saar, 9S4
St. Helena, ZD7
St. Martin, FG
St. Paul Islands, FB8
St. Pierre Island, FP8
Salvador, YS
Samoa, Americo, KS6
Samoa, British, ZM6
San Andres & Providencia, Archipelago of, HK0
San Marino, M1
Sao Thome, Principe of, CR5
Sarawok, VS4
Sardinia, IS1
Saudi Arabia, HZ
Scotland, GM
Seychelles, VQ9
Siam, HS
Sierra Leone, ZD1
Sikkim, AC3
Singapore, VS1
Sint Maarten, PJ2M-
Socotra, VS9
Solomon Islands, VR4
Somaliland, British, VQ6
Somaliland, French, FL8
Somaliland, Italian, I5, MS4
South Africa, Union of, ZS1, 2, 4, 5, 6
South Georgia, VP8
South Orkney Is., VP8, LU-Z
South Sandwich Is., VP8
South Shetland Is., VP8, LU-Z
Southwest Africa, ZS3
Soviet Union, UA1-UR2
Spain, EA
Spitzbergen, LA, LB
Sudan, Anglo-Egyptian, ST
Sumatra, PK4
Svalbord, LA, LB
Swan Island, KS4
Swaziland, ZS7
Sweden, SM
Switzerland, HB1, HB9

Syria, YK

Tadzhik, UJ8
Tahiti (French Oceania), FO8
Tanganyika Terr., VQ3
Tangier Zone, CN2, KT1
Tasmania, VK
Tibet, AC4
Timor, Portugese, CR10
Tobago, VP4
Togoland (Gold Coast), ZD4
Togoland, French, FD
Tokelau Islands, ZM7
Tonga Islands, VR5
Trieste, I1
Trinidad, VP4
Tristan da Cunha, ZD9
Trucial Oman, MP4
Tunisia, 3V8
Turkey, TA
Turkoman, UH8
Turks Islands, VP5

Ugondo, VQ5
Ukraine, UB5
Union Islands, ZM7
Union of South Africa, ZS1, 2, 4, 5, 6
United States, K, W
Uruguay, CX
Uzbek, UI8

Vatican City, HV
Venezuela, YV
Viet Nam, 3W8
Virgin Islands, KV4
Volcano Islands, KA0

Wake Island, KW6
Woles, GW
Wallis Islands, FW8
White R.S.F.S.R., UC2
Windward Islands, VP2
Wrangel Islands[4]

Yemen, 4W1
Yugoslavia, YU

Zanzibar, VQ1

Electronic TUBES

G-E HAM NEWS
Available FREE from
G-E Electronic Tube Distributors

published bi-monthly by
TUBE DEPARTMENT
GENERAL ELECTRIC
Schenectady 5, N. Y.

In Canada
Canadian General Electric Co., Ltd.
Toronto, Ontario

E. A. NEAL, W2JZK—EDITOR

Printed in U.S.A.

Vol. 11—No. 1

JANUARY–FEBRUARY, 1956

Electronic
TUBES

G-E HAM NEWS

Copyright 1958 by General Electric Company

GENERAL ELECTRIC

JANUARY-FEBRUARY, 1958

VOL. 13—NO. 1

More About — 150-WATT SINGLE BANDERS

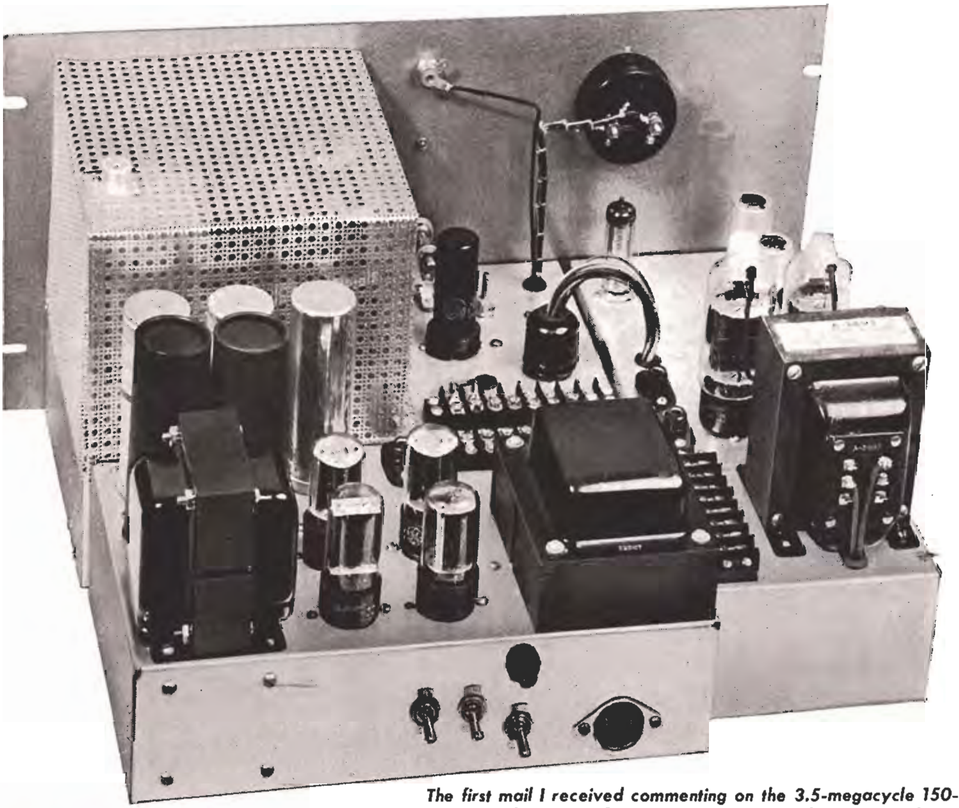

7- AND 14-MEGACYCLE TRANSMITTERS

The first mail I received commenting on the 3.5-megacycle 150-watt transmitter in the last issue of G-E HAM NEWS voiced, "Let's see those rigs for the other bands, Larry." So I'm glad to oblige with circuit and construction details for the 7 and 14-megacycle models, plus suggestions for preventing interference to television reception, in this issue. The modulator-keyer unit shown above is undergoing tests and will be described in a subsequent issue.

—*Lighthouse Larry*

CONTENTS

MORE ABOUT 150-WATT SINGLE BANDERS

The main features in the RF chassis of the 3.5-megacycle transmitter model—simple two-stage circuit, extra high-C oscillator and automatic VFO switch—have attracted a great deal of attention. The hundreds of radio amateurs who have personally inspected the transmitter models, and comments received in letters, all seem to agree that this is an ideal transmitter for CW operation on a favorite band.

In addition, many fellows have requested information on, or suggested changes; these fall mainly into the following statements:

1. "What is the easiest way to provide for both VFO and crystal control of the oscillator circuit?"
2. "How should the oscillator be wired for crystal control only for novices?"
3. "Do you have a circuit for a bandswitching model of this transmitter covering 3.5 to 30 megacycles, or at least two or three bands?"
4. "Can you suggest the best way to build a bandswitching VFO using the extra high-C circuit?"
5. "What changes are necessary to convert the transmitters to double sideband operation?"

Some of these questions will be answered in the description of the 7 and 14-megacycle transmitters that follows. The remaining suggestions will be commented upon at the conclusion of this article.

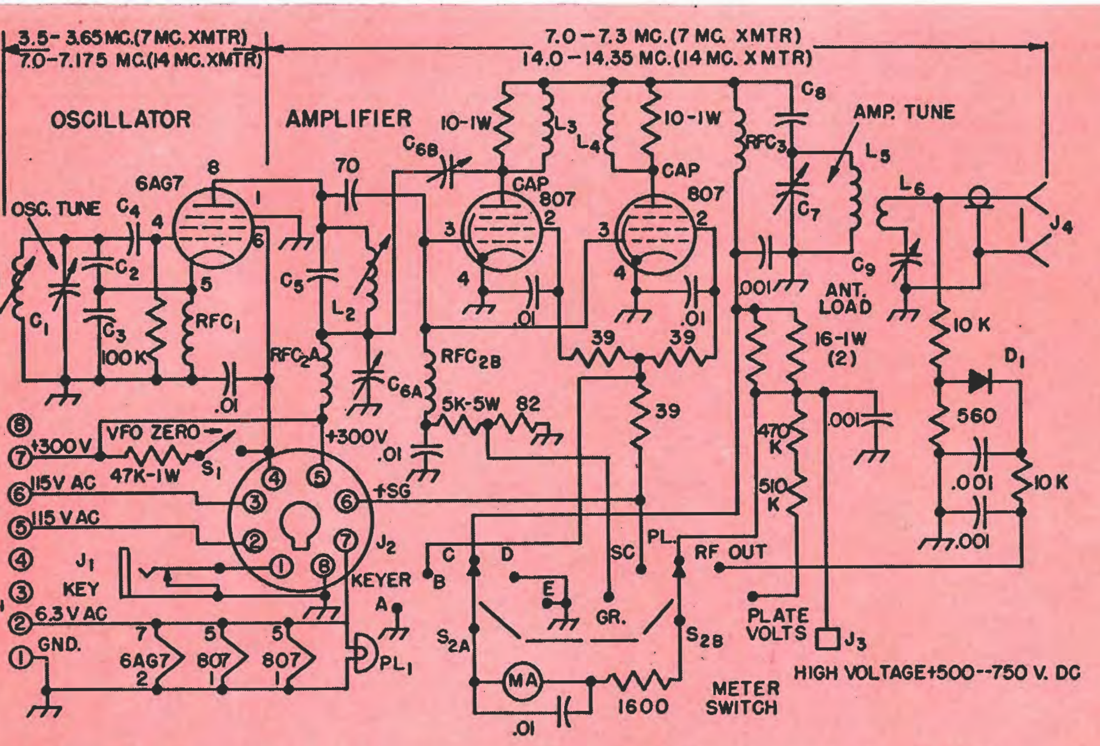

Fig. 1. Schematic diagram of the 7 and 14-megacycle transmitters. All resistor values are in ohms (K=1000), one-half watt unless otherwise specified. Capacitances given in whole numbers are in mmf; those in decimals are in mf; 600 volts working unless otherwise specified. Metering switch (S_2) positions are: "A," 0–25 ma DC; "B," 0–50 ma DC; "C," 0–250 ma DC; "D," RF output voltage; "E," 0–1000 volts DC.

GENERAL PARTS LIST

C_4—100-mmf silvered mica
C_8—0.001-mfd, 2500-volt working mica
D_1—general purpose germanium diode (G-E 1N48)
J_1—closed circuit phone jack
J_2—octal tube socket
J_3—high-voltage connector (Millen 37001)
J_4—chassis coaxial connector
L_3, L_4—6 turns, No. 16 enameled wire closewound on a ¼-inch-diameter, 1-watt resistor
MA—0-1-milliammeter (G-E DW-71 or equivalent)
PL_1—panel lamp bracket (Johnson 147-330)
S_1—single-pole, single-throw, normally open push-button switch (Switchcraft No. 101 or equivalent)
S_2—2-pole, 5-position, non-shorting ceramic tap switch (Centralab No. 2505)
TS_1—8-terminal barrier type terminal strip

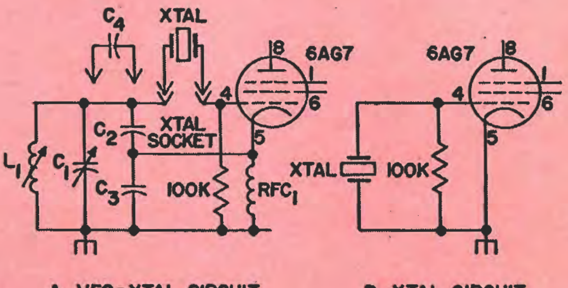

A. VFO-XTAL CIRCUIT B. XTAL CIRCUIT

Fig. 2. Schematic diagrams showing: A—method for including a crystal socket in the oscillator grid circuit into which either C_4 or a crystal ground for half the amplifier output frequency may be plugged; and B—schematic diagram for a crystal oscillator, with crystal ground for output frequency.

CIRCUIT DETAILS—7 AND 14-MEGACYCLE TRANSMITTERS

The same tube lineup used in the 3.5-megacycle transmitter, 6AG7 oscillator, and two 807's in the amplifier, was found equally suitable for the 7 and 14-megacycle transmitters. Comparison of the schematic diagram for the latter units, as shown in Fig. 1, with that in the November–December, 1957 issue, will indicate some differences. In all three transmitters, the oscillator grid circuit operates at half the amplifier output frequency.

The frequency determining circuitry is identical to that in the 3.5-megacycle transmitter, but variable capacitors having a smaller capacitance range are used for C_1, the oscillator tuning. Since the 7 and 14-megacycle amateur bands are quite narrow, percentagewise, it was possible to employ a single parallel-tuned tank circuit, C_5—L_2, and capacitive interstage coupling between the oscillator plate and amplifier grid circuits. The oscillator plate circuit operates as a frequency doubler, being tuned to the same band as the amplifier plate circuit.

Sufficient regeneration occurred in the 807 amplifier stage to cause oscillation under certain conditions in the 14-megacycle transmitter with no grid driving power, full screen voltage and class A bias applied to the 807's. So, a neutralizing circuit was added to both transmitters with capacitor C_{6B} forming one leg of a bridge neutralizing circuit that balances the combined grid-to-plate capacitance in the 807 tubes. The tube plates compose one plate of this capacitor, the other plate

PARTS LIST—3.5-, 7- AND 14-MEGACYCLE TRANSMITTERS

PART NO.	BAND MC	COMPONENT	VALUE	RATING
C_1	3.5 7 14	capacitor, air variable	15–325 mmf 10–150 mmf 6–50 mmf	0.024-inch air gap
C_2, C_3	3.5 7 14	capacitor, silvered mica	0.005 mfd 0.004 mfd 0.002 mfd	500 volts working
C_5, C_6	3.5 7 14	capacitor	200 mmf 100 mmf 700 mmf	500 volts working
C_{6A}	7 & 14	capacitor, mica padder variable	100–500 mmf	500 volts working
C_{6B}	7 & 14	capacitor, neutralizing	see "MECHANICAL DETAILS"	
C_7	3.5 7 14	capacitor, air variable	15–350 mmf 10–150 mmf 8–75 mmf	0.45–0.060-inch air gap
C_9	3.5 & 7 14	capacitor, 2 gang air variable 1 gang	20–700 mmf 10–350 mmf	0.015–0.020-inch air gap
L_1	3.5 7 14	inductance, iron slug tuned	2.1 uh, 14 turns, No. 20 wire 11/16 in. long 1.0 uh, 10 turns, No. 18 wire 11/16 in. long 0.5 uh, 7 turns, No. 18 wire 11/16 in. long	wound on National XR-50 coil form
L_{2A}, L_{2B}	3.5	inductance, iron slug tuned	8.5 uh, 28 turns, No. 24 wire 11/16 in. long	wound on National XR-50 coil form
L_2	7 14	inductance, iron slug tuned	4.2 uh, 20 turns, No. 20 wire 11/16 in. long 2.1 uh, 14 turns, No. 20 wire 11/16 in. long	wound on National XR-50 coil form
L_5	3.5 7 14	inductance, air-wound, plastic strip insulation	6.8 uh, 20 turns, No. 16 wire 1½ in. dia., 2½ in. long 3.4 uh, 15 turns, No. 16 wire 1½ in. dia., 2½ in. long 1.7 uh, 12 turns, No. 14 wire 1½ in. dia., 3 in. long	(air-dux No. 1208) (air-dux No. 1206) (air-dux No. 1204)
L_6	3.5 7 14	inductance, wound over grounded end of L_5	5 turns, HV insulated wire 3 turns, HV insulated wire 3 turns, HV insulated wire	
RFC_1	3.5 7 & 14	RF choke, small 3 pi	1.0 mh, 75 ma. 0.5 mh, 75 ma.	National R-50
RFC_2, RFC_{2A} RFC_{2B}	3.5, 7 & 14	RF choke, small 3 pi	0.5 mh, 75 ma.	National R-50
RFC_3	3.5 7 14	RF choke, medium 3 pi RF choke, medium 3 pi or scramble wound solenoid type RF choke, single layer solenoid or home-wound RF choke	1.0 mh, 300 ma. 0.5 mh, 300 ma. 200 uh, 500 ma. 30 uh, 500 ma. 28 uh, 110 turns, No. 28 enameled wire, 2½ in. long, turns spaced dia. of wire	National R-300U Raypar RL-112 Raypar RL-111 wound on ½ in. dia. plastic rod

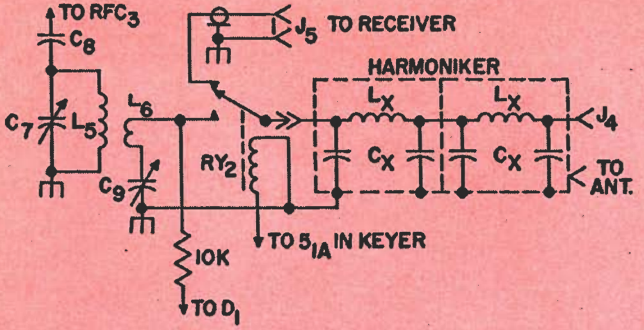

Fig. 3. Schematic diagram showing a built-in antenna switching relay and *Harmoniker* type TVI filter, both of which can be included on the transmitter chassis.

PARTS LIST—ANTENNA RELAY—*HARMONIKER*

3.5 MEGACYCLES

L_x—840 mmf, 500-volt mica

L_x—2.1 uh, 12 turns, No. 18 wire, 1 inch in diameter, 1½ inches long (Miniconductor No. 3014, or air-dux No. 808)

7 MEGACYCLES

C_x—430 mmf, 500-volt mica

L_x—1.1 uh, 13 turns, No. 18 wire, ⅝ of an inch in diameter, 1⅝ inches long (Miniductor No. 3006, or air-dux No. 508)

14 MEGACYCLES

C_x—220 mmf, 500-volt mica

L_x—0.55 uh, 10 turns, No. 18 wire, ½ inch in diameter, 1¼ inches long (Miniconductor No. 3002, or air-dux No. 408)

J_5—chassis coaxial cable connector, or female chassis phono jack

RY_2—single pole (or double pole—see text), double throw midget relay, RF type, 6 or 115-volt AC coil (Potter and Brumfield KT-11A, or Advance AM/2C)

being a small aluminum plate that projects up between the tubes. A 100–500-mmf mica padder variable capacitor at C_{6A} provides a convenient adjustment to achieve complete neutralization.

The simplest method of adapting the oscillator circuit for both VFO and crystal controlled operation is to remove C_4 from the circuit and substitute a crystal instead, as shown in Fig. 2A. In one transmitter, the crystal socket was mounted on the chassis directly behind L_1. Pins from an octal tube base were then soldered onto the leads on C_4, so that it could be plugged into the crystal socket whenever VFO operation was desired. The crystals should be ground for half the amplifier output frequency.

The oscillator can be wired for only crystal controlled operation by eliminating C_1, C_2, C_3, C_4, L_1, and RFC_1. The resulting circuit is shown in Fig. 2B. Crystals used with this circuit should be ground for the output frequency. Harmonic type crystal oscillator circuits for the 6AG7 can be found in the "High Frequency Transmitters" chapter of the ***Radio Amateur's Handbook.***

The power, metering and RF output coupling circuitry is essentially similar to corresponding circuits in the 3.5-megacycle transmitter in the November–December, 1957 issue. If desired, an antenna switching relay and half-wave "Harmoniker" type bandpass filter can be incorporated into the transmitter chassis. This was done on the 14-megacycle transmitter model instead of placing these items in an unused corner of the table relay rack cabinet. Although a single-pole, double-throw relay, RY_2, is shown in the suggested circuit of Fig. 3, a double-pole, double-throw relay can be substituted. The extra set of contacts will come in handy to ground the antenna connection to the receiver when the relay is energized.

MECHANICAL DETAILS

The photo on page 1 of this issue shows how the three portions of the complete transmitter—RF unit, dual-voltage power supply and a combination keyer-modulator unit—will look when they are placed inside a table relay rack cabinet. Unitized construction simplifies the task of making changes or rebuilding any of these units later on.

Both the 7 and 14-megacycle transmitters were constructed on 7 x 12 x 3-inch aluminum chassis (Bud

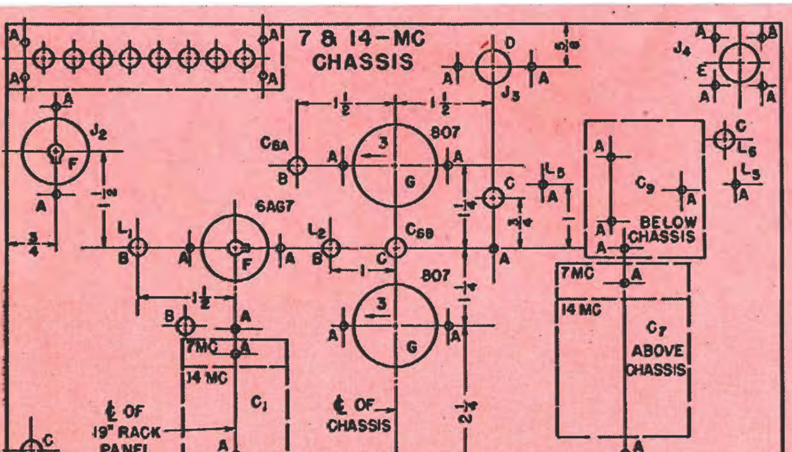

DRILLING LEGEND

"A" drill—No. 26 for tube socket bolts, etc.

"B" drill—$\frac{9}{32}$ of an inch diameter for small coil forms.

"C" drill—⅜ of an inch in diameter.

"D" drill—½ of an inch in diameter.

"E" drill—⅝ of an inch in diameter.

"F" socket punch—1$\frac{1}{16}$ inches in diameter for octal tube sockets.

"G" socket punch—1¼ inches in diameter for GL-807 tube sockets.

Fig. 4. Chassis deck drilling diagram for the 7 and 14-megacycle transmitters. Small holes should be located from corresponding holes on the components.

AC-408). The parts layout is quite similar to that used for the 3.5-megacycle transmitter. Changes shown in the drilling diagram, Fig. 4, include moving the oscillator tube closer to the panel and different drilling for the interstage coupling and neutralizing components.

Two locations were tried for the 807 amplifier plate circuit coil, L_5, with no apparent difference in performance. In the 7-megacycle transmitter, L_5 was fastened to the chassis deck behind C_7 with 1-inch high ceramic pillar insulators, as shown in the top view, Fig. 5. This location for L_5 was not practical in the 3.5-megacycle transmitter, where C_7 was over an inch longer. Since C_7 in the 14-megacycle transmitter was considerably shorter than L_5, a 2½-inch long ceramic pillar insulator supported the "hot" end of L_5 directly from the chassis.

The neutralizing capacitor, C_{6B}, was formed by bending a ½-inch wide lip, drilled at the middle, on one end of a ¾ x 3-inch strip of $\frac{1}{16}$-inch thick soft aluminum sheet. This strip was then mounted between the 807's on a ⅝-inch-high feedthrough insulator. The small components are mounted under the chassis either on the tube socket lugs or small terminal lug strips, as shown in Fig. 6. The exact placement of these parts is not critical provided that the RF and bypass circuit leads are made as short as possible. Each transmitter in this series was wired somewhat differently in order to check on lead dress.

Additional harmonic suppression features were tried on the 14-megacycle transmitter; these included shielding the 807 amplifier, placing 0.01-mfd bypass capacitors on all terminals running out of the transmitter chassis, and mounting the ***Harmoniker*** output filter directly on the chassis.

A shield box, 6¾ inches wide, 7 inches deep, and 5 inches high was fashioned from perforated aluminum sheet. This shield is shown in the cover photo. One-half inch wide lips were extended down over the side, rear and chassis deck. The front of the shield was fastened to lips bent onto a second piece of perforated aluminum sheet fastened behind the panel. A metal chassis bottom plate also was added.

The ***Harmoniker*** was constructed in a 2¼ x 2¼ x 5-inch Minibox (Bud CU-3004) which also supports the amplifier shield. Holes which match the location of J_4 on the chassis diagram were punched in both ends of the Minibox, as shown in the detail view of the 14-megacycle amplifier, Fig. 7 (left). Note that another piece of perforated aluminum sheet serves as a shield between the coils, L_x, in the ***Harmoniker***. Capacitors C_x were soldered between the ends of the coils and grounding lugs fastened to the side of the box. The lead running through the shield was insulated with a small plastic sleeve.

The antenna switching relay, RY_2 in Fig. 3, was fastened beneath the chassis next to C_9. The short lead from the relay arm to the ***Harmoniker*** may be brought up through the hole in the chassis, as shown, or through a small ceramic feedthrough insulator.

Since a parallel-feed system was used to apply plate voltage to the 807 stage, some care must be exercised in choosing an RF choke for RFC_3. In the 14-megacycle transmitter, a solenoid type single layer wound RF choke was found to work best. In Fig. 8 (left), a commercially made choke (Raypar RL-112) is shown mounted upon a 500-mmf high-voltage ceramic capacitor from a television receiver.

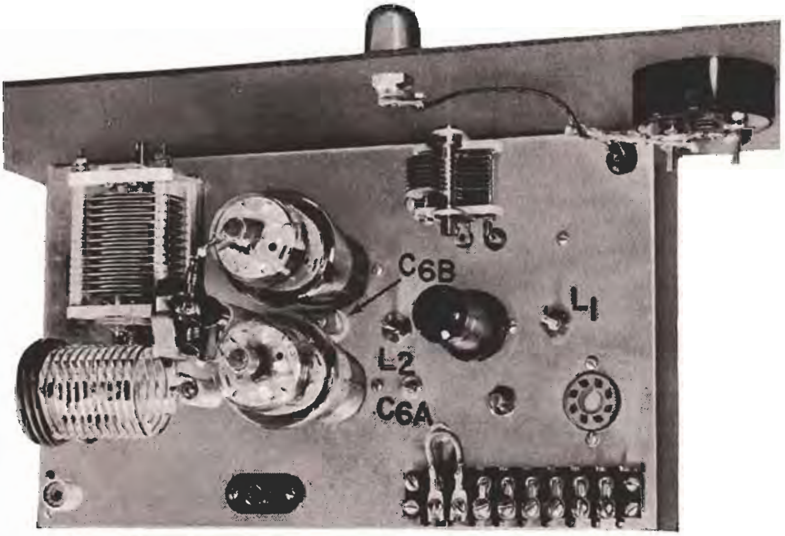

Fig. 5. Top view of the 7-megacycle transmitter chassis. Note the ceramic feedthrough insulator between the 807's on which the neutralizing capacitor plate, C_{6B}, is mounted.

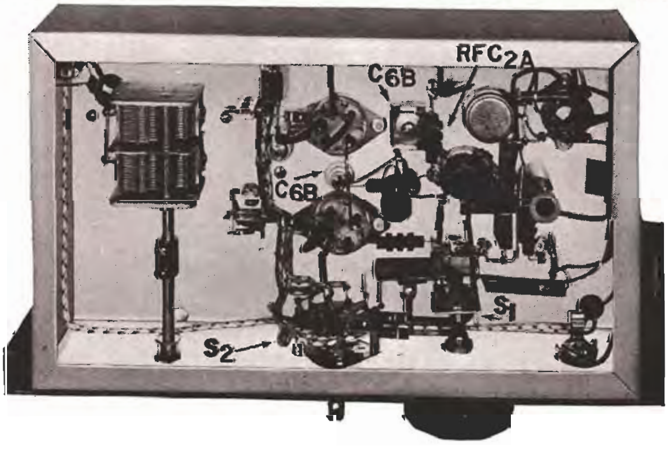

Fig. 6. Bottom view of the 7-megacycle transmitter chassis. All power and metering circuit wiring is placed close to the chassis wherever practical. The potentiometer shown next to the 6AG7 tube socket was used in oscillator screen voltage experiments on this model.

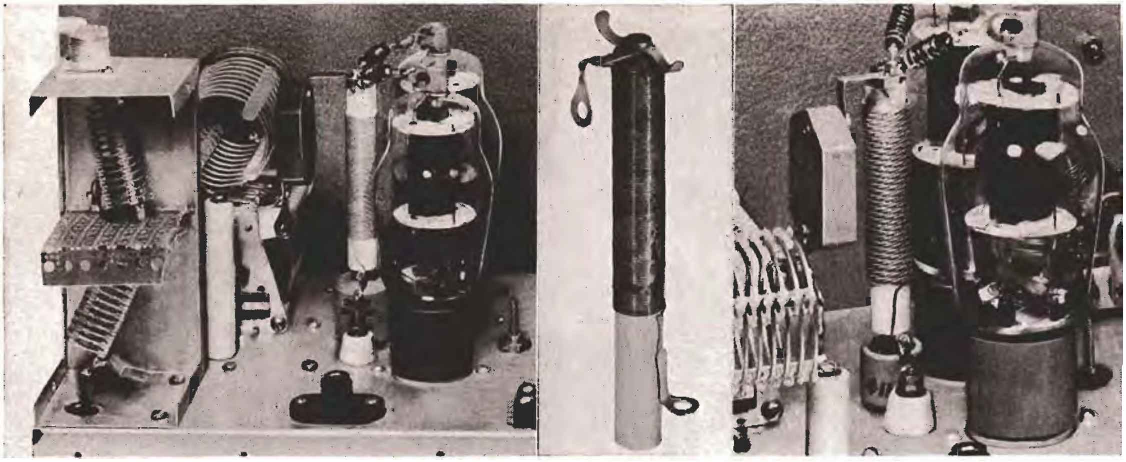

Fig. 7. Detail views of the RF chokes used for RFC_3 in the 7 and 14-megacycle transmitters. (Left) The 14-megacycle 807 amplifier stage with a Raypar RL-112 RF choke mounted atop a 500-mmf television receiver high-voltage ceramic capacitor. In this transmitter, the 807 plate circuit coil, L_5, was mounted on the tuning capacitor, C_7. This change left room on the chassis rear corner for the 14-megacycle unbalanced type *Harmoniker*. (Center) The home wound RF choke which also is suitable for RFC_3 in the 14-megacycle transmitter. (Right) The 7-megacycle amplifier stage showing the Raypar RL-102 RF choke mounted on a Centralab type 858S-1000 0.001-mfd cylindrical type ceramic capacitor.

A suitable home made RF choke for this transmitter may be wound on a ½-inch-diameter polystyrene rod, also shown in Fig. 7 (center). Both ends of the rod are threaded for 6–32 machine screws. Three soldering lugs at the upper end hold the 807 plate cap leads and RF choke wire. This wire was secured at the lower end of the winding by threading it through a small hole in the plastic rod.

Cut the polystyrene rod 3 inches long if the home made choke is to be mounted upon a ceramic capacitor, as was done with the Raypar choke. The rod shown was cut 4½ inches long so that the choke could be fastened directly to the chassis. Substitute a 0.001-mfd, 2000-volt disc ceramic capacitor, connected between the high-voltage feedthrough insulator just behind the choke and a soldering lug between the plastic rod and the chassis, for the cylindrical bypass capacitor.

Two types of commercially wound RF chokes were found suitable for RFC_3 in the 7-megacycle transmitter. In the detail view of Fig. 7 (right), a Raypar type RL-102 RF choke was mounted on a small 0.001-mfd, 5000-volt cylindrical ceramic capacitor (Centralab type 858S-1000) having tapped holes for terminals. A conventional 0.5-mh pi-wound RF choke, such as the National R-300U, also permitted normal performance. This type of choke, having a threaded stud on one end, was mounted on a ½-inch-diameter ceramic pillar insulator 2½ inches high. A 0.001-mfd disc ceramic bypass capacitor was placed beneath the chassis adjacent to the high-voltage feedthrough insulator.

OPERATION—7 AND 14-MEGACYCLE TRANSMITTERS

The initial tune-up procedure for the 7 and 14-megacycle transmitters follows that described in the last issue for the 3.5-megacycle transmitter. First, the oscillator is checked for proper operation and adjusted for the desired frequency coverage by setting the slug in L_1. For CW operation, adjust L_1 so that the oscillator is a few kilocycles inside the low-frequency ends of the respective bands with C_1 set at maximum capacity. Then, when C_1 is rotated from maximum to minimum capacity, the 7-megacycle transmitter should cover approximately 7.0–7.2 megacycles; the 14-megacycle transmitter should tune 14.0–14.25 megacycles, both with the capacity values listed for C_1 in the PARTS LIST.

The interstage coupling coil, L_2, should be tuned for maximum grid current in meter position "A" with C_1 set in the center of the tuning range. It is best to not apply screen and plate voltage to the 807 amplifier until the above adjustments, and the following neutralizing procedure, have been completed.

With the oscillator running, set C_{6A} at maximum capacity. Tune the 807 plate tuning capacitor, C_7, through its range and note whether the 807 grid current fluctuates. Some variation probably will be noted, indicating that the 807 amplifier is not neutralized. Slowly turn C_{6A} toward minimum capacity while rocking C_7 back and forth through the capacity setting at which the variation in grid current occurred. A setting of C_{6A} should be found at which practically no fluctuation in grid current can be noticed.

Plate and screen voltages (500–750 and 250–300, respectively) can now be applied to the 807 amplifier stage to test the transmitter with a dummy antenna before putting it on the air. A 100-watt lamp connected to J_4 makes a suitable dummy antenna load. With 600 plate volts on the 807's, all transmitters could be loaded up to 250 milliamperes plate current (meter position "C") by adjusting C_9 for maximum RF output voltage, as indicated in meter position "D." Normal screen current (position "B") on the 807 stage will be about 12–15 milliamperes at full plate current.

The link output coupling circuit shown in the main schematic diagram is suitable for loading the transmitter directly into half-wave dipole antennas fed either with 52 or 72-ohm coaxial cable; or with 72-ohm twinlead. "All-band" antennas fed with these cables also should load the transmitter to full output, usually with C_9 set at some point between half and maximum capacity. A suitable antenna coupler should be inserted between the transmitter and antenna feedlines having higher impedances, such as 300-ohm twinlead; or for an end-fed antenna. Most amateur radio and antenna handbooks describe circuits for properly matching the low-impedance transmitter output to these higher impedance antennas.

PARASITICS

There is an error in the schematic diagram for the Clapp circuit on page 6 of the November-December, 1957, issue of G-E HAM NEWS, Fig. 1A. The circuit as shown shorts out the RF choke in the tube cathode-to-ground lead. There should be no connection at the junction of the lead at the lower end of the grid resistor, and the lead running from the cathode to the 0.001-mfd capacitors from grid to ground.

SWEEPING *the* SPECTRUM

Wherever you find persons who have distinguished themselves in community and other public service activities, you are sure to find radio amateurs.

This has been proven time and time again in our annual Edison Radio Amateur Award program; it's equally true of the thirteen full-time electronics technicians who recently were recipients of the first annual All-American Awards for public service, sponsored by General Electric's Receiving Tube Department. All thirteen winners received trophies and checks for $500, for use in a community activity of their preference, at a ceremony in Washington, D. C., last month.

Five of the thirteen technicians are FCC-licensed radio amateurs. Their names, call letters, and the public services for which they were honored, are as follows:

Frank J. Hatler, W2EUI, Roselle, N. J., cited for long and outstanding organizational efforts in civil defense and emergency communications by amateur radio and several instances of on-the-scene emergency service, including three aircraft crash disasters.

Mortimer Libowitz, K2BDQ, Brooklyn, N. Y., has trained many youngsters in the art and science of radionics, developing some into hams, and others into repairmen; also active in civil defense and Red Cross communications.

Richard G. Wells, Jr., W4NSZ, Pikeville, Ky., furnished free cable connections to a community television system to public schools and hospitals, aided in flood emergency and Civil Defense communications and encouraged youths in electronics.

Scott A. Witcher, Jr., W5YIS, Lampasas, Texas, saved the lives of many trapped persons during disastrous floods in May, then directed emergency communications through his amateur radio station.

Bart Rypstra, W8NWO, Charlotte, Mich., cited for outstanding community service with Boy Scouts, rendering free radio and television servicing for needy people, and assisting in civil defense communications with his amateur station.

Heartiest congratulations to these outstanding radio amateurs!

* * *

We've never seen such a reshuffling, rebuilding and rehashing of mobile amateur radio gear as has taken place ever since the automotive stylists systematically eliminated most of the roomy spaces behind and immediately below the dashboard in the newer cars. This is in addition, of course, to all the heater and power supply circuit rewiring brought about by the changeover from 6 to 12-volt automotive electrical systems.

Those smoothly sloping underdashes may cause some new owners to wax eloquently, but they all but frustrate the ham who is attempting to install his mobile receiver and transmitter snugly against the dash and still leave some footroom for the middle front seat passenger. And if the gear is mounted astride the transmission hump, the need for longer than normal arms, plus diverted attention that creates a safety hazard, is the price paid by the mobileer.

We've seen that much-desired "built-in look" in only one installation of mobile gear in a 1957 auto, in a make having a large removable panel in the center of the dash. But even the 1958 model of this vehicle has been altered to effectively render this space unavailable for mobile gear.

What will be the answer to this problem? The user of commercially built equipment may resign himself to installing his mobile station on the transmission hump. The home constructor can still hope for a less conspicuous installation by building his gear in some weird shape which will fit up behind the right corner of the dash, and bring out a remote tuning dial and other essential controls to an accessible location on the dash. Non-smoking mobileers might even consider discarding the dash ash tray, substituting these controls in its place!

Whatever the solution to your particular mobile gear installation problem, it is clear that you will have to call upon ingenuity never before utilized in order to be able to call, "CQ . . . CQ, this is W . . . /mobile. . . ."

* * *

About a year ago in this column I mentioned that General Electric has produced a series of educational motion picture films on subjects related to electronics. These films all fit standard 16-millimeter sound projectors and run from ten to thirty minutes in length. Some are in black and white; others are in color.

These films are available for loan to amateur radio clubs, school classes, and any other groups, at no charge, from eighteen film libraries which G.E. maintains in large cities in the United States. In case your club secretary, group adviser, or program chairman has not received a copy of the catalog in which all current films are listed, he may do so by sending a postal card to me requesting it.

This catalog also lists the film library address in your area from which the films should be obtained. I'm sure you'll enjoy them as a club program.

* * *

We've been seeing—and hearing—more and more about a relative newcomer to the ranks of amateur radio periodicals—one that has been very well received in our western states—entitled *West Coast Ham Ads.*

Now rounding out its fourth year of publication, this forty-page monthly magazine usually contains really informative technical articles, news of West Coast ham activities and club meetings, information on new products and trends in the amateur equipment field, and, of course, a smattering of advertising. If we've whetted your appetite, a postal card to them at 10517 Haverly Street, El Monte, California, will bring further details to your shack.

—*Lighthouse Larry*

SINGLE BANDER RANDOM IDEAS

Some of the most numerous questions we have received regarding the 150-watt single band transmitters—those pertaining to inclusion of crystal controlled operation, and circuit data for 7 and 14-megacycle transmitters—have been answered elsewhere in this issue. Other questions—circuit data for 1.8 and 21-megacycle transmitters; bandswitching ideas for both the high-C VFO and complete transmitter; circuit changes for double sideband operation; and a mechanical arrangement whereby separate RF units for each band could be plugged into a cabinet containing a common power supply, keyer or modulator and metering circuits—will be commented upon here.

Generally, circuit constants for a 1.8-megacycle transmitter—capacitances and inductances of C_1, C_2, C_3, C_5, C_6, C_7, and C_9, L_1, L_{2B}- and L_5—should be twice the values shown for the 3.5-megacycle transmitter. The value of C_9 and L_6 will depend upon the antenna feedline impedance into which the transmitter works.

Two methods of scaling down the data shown for the 14-megacycle transmitter for a 21-megacycle transmitter are practical. First, the oscillator grid circuit can be left on 7 megacycles, with the plate circuit tripling to 21 megacycles. For this, C_5, C_7, L_2, L_5 and L_6 are reduced to two-thirds of their 14-megacycle counterparts. Or, the oscillator grid circuit can be placed on 10.5 megacycles, doubling in the plate circuit to 21 megacycles. This method requires that C_1, C_2, C_3, and L_1 be scaled down to two-thirds of the 14-megacycle transmitter values.

Devising a ganged bandswitching system for this—or any—transmitter that does not assume the proportions of a mechanical monstrosity is quite a problem. We've tried several ideas, both on paper and on test models, but, as the old saying goes, "The issue is still in doubt." Contacts on the compact, inexpensive ceramic-insulated tap switches are not quite durable enough for switching the 807 plate circuit unless caution is always exercised when changing bands—i.e., turning off the high voltage first. The heavy duty tap switches will withstand this abuse, but their cost approaches that of a rotary inductor.

Preliminary tests with double sideband circuitry in the 807 stage—incorporating a push-pull grid circuit and bringing out separate screen voltage connections for each 807—indicate that more isolation would be desirable between the oscillator and amplifier stages to eliminate any trace of frequency modulation. This could be achieved by adding a miniature pentode tube as the oscillator and operating the 6AG7 as a frequency doubler to drive the 807's.

Building a transmitter having plug-in RF units introduces some mechanical problems, such as cutting a large hole in the panel through which the RF unit is plugged in; and the necessity of maintaining close tolerances in positioning the power and RF output plugs at the rear of the RF unit. All the RF circuitry should fit into a somewhat smaller chassis—say 5 x 10 x 3 inches—when some of the extras we've included in our RF units are transferred to the fixed portion of the transmitter.

Still another mechanical layout which shows promise is to construct an RF unit containing all components except those which change in value for the different bands. Coils for a specific band could then be placed in a plug-in tuning unit having shields between them. Thus, tuning units could be assembled for only those bands in which the constructor is interested.

Each of the transmitters described elsewhere differed slightly in parts layout, indicating that as long as the usual precautions against stray coupling between stages and making all RF leads as short as possible are followed, a successful transmitter will result. We've simply brought out the foregoing random ideas for those amateurs who desire to build something different and possess a measure of mechanical ingenuity, plus reasonably well-equipped shop facilities.

Electronic
TUBES

G-E HAM NEWS
Available FREE from
G-E Electronic Tube Distributors

published bi-monthly by
ELECTRONIC COMPONENTS DIVISION
GENERAL ELECTRIC
Schenectady 5, N. Y.
In Canada
CANADIAN GENERAL ELECTRIC CO., LTD.
189 Dufferin St., Toronto 3, Ontorio

E. A. NEAL, W2JZK—EDITOR

Printed in U.S.A.

VOL. 13—NO. 1

JANUARY-FEBRUARY, 1958

Form 3547 Requested

Electronic
TUBES

G-E HAM NEWS

GENERAL ELECTRIC

MARCH-APRIL, 1958

VOL. 13—NO. 2

DOUBLE SIDEBAND JUNIOR

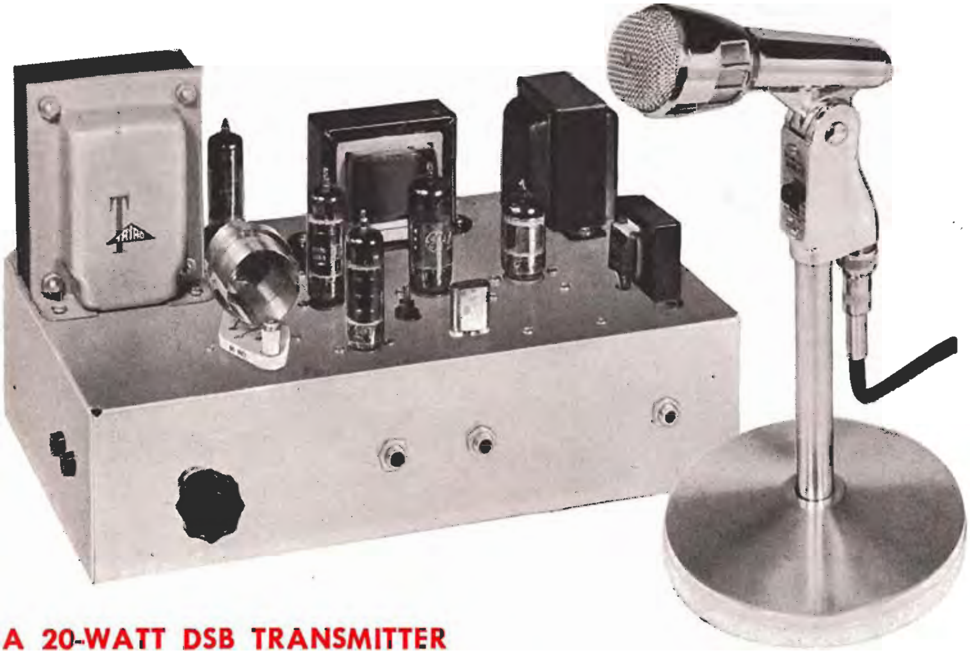

A 20-WATT DSB TRANSMITTER
FOR 3.8–4.0 MEGACYCLES

Get started on rapidly growing double sideband with this simple, junior-sized—but complete—transmitter designed by K2GZT (ex-WϕAHM). If this little rig looks familiar, you're one of literally thousands of radio amateurs who have examined it personally at ARRL conventions, and club meetings, during the past several months.

—*Lighthouse Larry*

CONTENTS

DOUBLE SIDEBAND JUNIOR

To say that radio amateurs have been expressing considerable interest in the double sideband, suppressed carrier communications system could easily be the understatement of the year. This has been obvious from the wealth of articles on the subject in recent electronics journals (see bibliography on page 8); also from the steady flow of requests for more information on double sideband in Lighthouse Larry's mail box.

This has resulted in the design of a simple, low-cost double sideband transmitter in which several desirable features have been included. The peak power input capability is about 20 watts, sufficient for putting a respectable signal directly into an antenna; or as a driver for a higher powered linear amplifier.

Before describing the transmitter, let's first examine double sideband as a communications system, which will reveal that the following benefits may be obtained:

1. Double sideband is a suppressed carrier system. This is another step toward eliminating hetrodyne interference—and the final amplifier power capability is not wasted on a carrier[1].
2. Since the output waveform is a replica of the modulating waveform, speech clipping may be employed to increase the average intelligence power.
3. A double sideband transmitter is quite inexpensive and simple compared to either amplitude modulated or single sideband equipment[2].
4. Modulation may be accomplished at the operating frequency.
5. Frequency diversity is inherent in the double sideband system. (The receiving operator has his choice of the more readable of two sidebands.)[3]
6. Double sideband can be received with either a single sideband or synchronous detection receiver. Therefore, it is compatible with single sideband. The synchronous receiver eases transmitter stability requirements by phase locking to the double sideband signal[1].

CIRCUIT DETAILS

In a double sideband transmitter, the modulation process occurs in an amplifier using two tetrode or pentode tubes, called a balanced modulator. Recently published double sideband modulator circuits—a typical diagram is shown in Fig. 1—have shown the RF driving signal applied to the control grids in push-pull; and the audio modulating signal to the screen grids in push-pull. The tube plates are then connected in parallel to cancel out the RF carrier. This circuit is particularly suited to high power balanced modulators, since an expensive high voltage split-stator variable capacitor is not required in the plate circuit.

Examination of the schematic diagram for the DOUBLE SIDEBAND JUNIOR transmitter, Fig. 2, will reveal that the RF output stage consists of two Type 6AQ5 pentode tubes (V_2 and V_3) with the control grids in parallel, and the screen grids and plates in push-pull. This balanced modulator circuit was chosen because a compact receiving type two-section variable capacitor (C_1) can be used in the push-pull plate tank circuit. The RF output is link coupled from the center of the plate tank coil (L_2).

The grids are driven by a crystal controlled oscillator, one half of a 12BH7 twin triode tube (V_{1A}). The other half (V_{1B}) is the audio modulator stage. The RF output stage is screen modulated with the push-pull audio signal, transformer coupled from the modulator stage. The transformer specified for T_2 is connected backwards (primary to the screen grids of V_2 and V_3; secondary to plate of V_{1B}). The RF carrier signal applied in parallel to the control grids of the 6AQ5 tubes is cancelled out in the push-pull plate circuit.

With no modulation the plate current in both final tubes will be low because of the low screen voltage. If a sinusoidal audio tone is assumed as the modulating signal, one screen is driven positive during the first half-cycle and the other is driven negative. The 6AQ5 having positive screen grid conducts and an RF current is supplied to the load by that tube. During the next half of the audio cycle, the other tube supplies RF power to the load and the first tube rests. Note that only one tube is working at any one time, except when there is no audio; then both tubes rest. Neutralization is no problem, as the balanced modulator circuit is self-neutralizing.

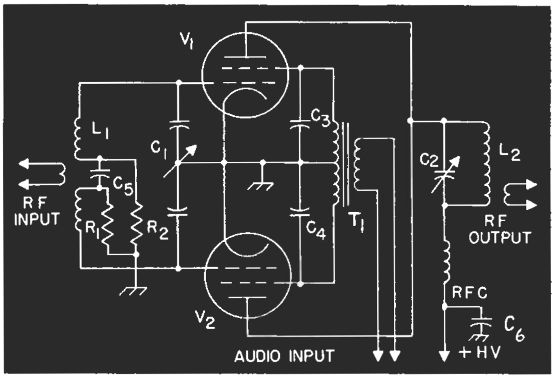

Fig. 1. Schematic diagram for the balanced modulator circuit used in most double sideband transmitter descriptions. Parts values are dependent on tube type and frequency.

A positive bias for the 6AQ5 screen grids—about 13 volts—is developed across the 2000-ohm resistor in series with the cathode-to-chassis connection for the modulator tube (V_{1B}). Current for operating a carbon microphone is supplied through the 1500-ohm resistor.

The two audio voltage amplifier stages employ a 12AU7 twin triode (V_4). The first stage is driven by a single button carbon microphone through a matching transformer (T_3). The first audio stage drives a shunt-type diode clipper circuit which clips both positive and negative audio signal peaks. The clipping level is adjusted by varying the positive bias on the clipping diodes, D_1 and D_2. This bias is obtained from a 1000-ohm potentiometer in series with the cathode-to-chassis circuit of the second audio amplifier stage (V_{4B}).

A simple pi-section audio filter (C_2, C_3 and L_3) following the clipper suppresses the audio harmonics ("splatter") generated in the clipping process. The second audio stage then drives the modulator (V_{1B}).

Push-to-talk operation of the transmitter is obtained simply by grounding the cathode of the crystal oscillator tube (V_{1A}) through a single pole, single throw, normally open push-button switch of the type found on most single button carbon microphones (war surplus T-17, or Electro-Voice Model 210-KK). If the push-to-talk feature is not desired, substitute a two conductor phone jack for the three conductor jack (J_3) shown in the schematic diagram.

Additional audio amplification will be required if a low-output crystal, ceramic or dynamic microphone will be used with the transmitter in place of the carbon microphone. This extra gain can be obtained with a 12AX7 twin triode tube in a two-stage audio preamplifier. The circuit for this amplifier, which will deliver a voltage gain in excess of 1000, is shown in Fig. 2. The arm on the 250,000-ohm gain control at the output of the second stage (V_{6B}) feeds directly into the grid of V_{4A}. The transformer (T_3) and carbon microphone voltage circuit can thus be eliminated.

The transmitter may be constructed with the high voltage power supply shown in the main schematic diagram; or, any separate power supply capable of delivering 400 volts at 70 ma may be used instead. A lower plate supply voltage will result in reduced RF power output from the transmitter.

Since operation of 6AQ5 tubes with 400 volts on the plates is above any specified rating, applying a sustained audio modulating tone probably would overload the tubes and make them gassy, thus ruining them.

The transmitter may be operated in mobile service with a PE-103 dynamotor as a plate power supply. The microphone control circuit should be connected to switch the dynamotor rather than the oscillator.

If operation on other bands is desired, it will be necessary to change only L_1 and L_2. L_1 should be self-resonant at the crystal frequency and L_2 should be a conventional balanced tank coil for the band in use. The transmitter may be operated on two bands, as it is possible to double in the final amplifier. For example, if an 80-meter crystal and a 40-meter tank coil (L_2) are used, the output will be in the 40-meter band. This method of operation is not highly recommended, but only mentioned as a possibility.

No special effort has been made to achieve a high order of carrier suppression. However, laboratory measurements indicated 40 db of suppression in the original model. At least 30 db of carrier suppression should be obtained with reasonably symmetrical wiring in the RF output circuit. In most cases, the audio hum and noise level will be about equal to the carrier level.

MECHANICAL DETAILS

The transmitter shown on page 1 was constructed on a 7 x 12 x 3-inch aluminum chassis (Bud AC-408). A smaller chassis, or utility box, will easily hold the RF and audio components, especially if the power supply is constructed on a separate chassis. Of course, if a suitable high voltage supply already is available, utilize it instead.

The same relative locations for major parts, as shown in the chassis drilling diagram, Fig. 3, should be followed. If the audio preamplifier for low output microphones is to be included, the tube socket should be placed in the location indicated on this diagram. The

PARTS LIST—DOUBLE SIDEBAND JUNIOR

C_1	two-section variable, 7—100-mmf per section (Hammarlund MCD-100S or equivalent)
C_2	500-mmf, 500-volt mica
C_3	300-mmf, 500-volt mica
C_4, C_5, C_6	25-mfd, 50-volt electrolytic
C_7, C_8	40-mfd, 450-volt electrolytic
C_9	16-mfd, 450-volt electrolytic
D_1, D_2	1N63 germanium diodes (G-E 1N63)
J_1, J_2	two-conductor, closed-circuit phone jack
J_3	three-conductor, open-circuit phone jack
L_1	15 uh, 50 turns, No. 28 enameled wire, scramble wound ¼ of an inch long on a ⅜-inch diameter iron slug-tuned coil form (CTC LS-3)
L_2	44 uh, 48 turns, No. 22 wire, 1½ inches long, 1¼ inches in diameter, with 3-turn link at center (B&W 80JVL)
L_3	6 henry, 40-ma, 300-ohm iron core choke (UTC R-55 or equivalent)
L_4	14 henry, 100-ma, 450-ohm iron core choke (UTC R-19 or equivalent)
R_1	1000-ohm, 2-watt potentiometer
R_2	3100-ohm, 5-watt wire-wound resistor
R_3	250,000-ohm potentiometer, audio taper
RFC_1	2.5 mh RF choke
S_1	single pole, single throw toggle switch
T_1	Power transformer, 880 volts center tapped, 75 ma DC, four 6.3-volt heater windings, 115-volt, 60 cycle primary (Triad R-70A or equivalent) (6 X 4 rectifier heater should be powered from separate 6.3-volt winding on T_1.)
T_2	driver transformer, turns ratio 5.2 to 1, primary to ½ secondary; connect primary as secondary and vice versa.) (Thordarson 20D79 or equivalent)
T_3	line or single button carbon microphone-to-grid transformer, turns ratio 31.4 to 1. (Triad A-1X)
V_1	12BH7A tube
V_2, V_3	6AQ5 tube (G-E types 6005 Five-Star, or 6669 Communication series, also suitable)
V_4	12AU7 tube
V_5	6X4 tube (5Y3-GT if T_1 has 5-volt winding)
V_6	12AX7 tube (optional audio amplifier)

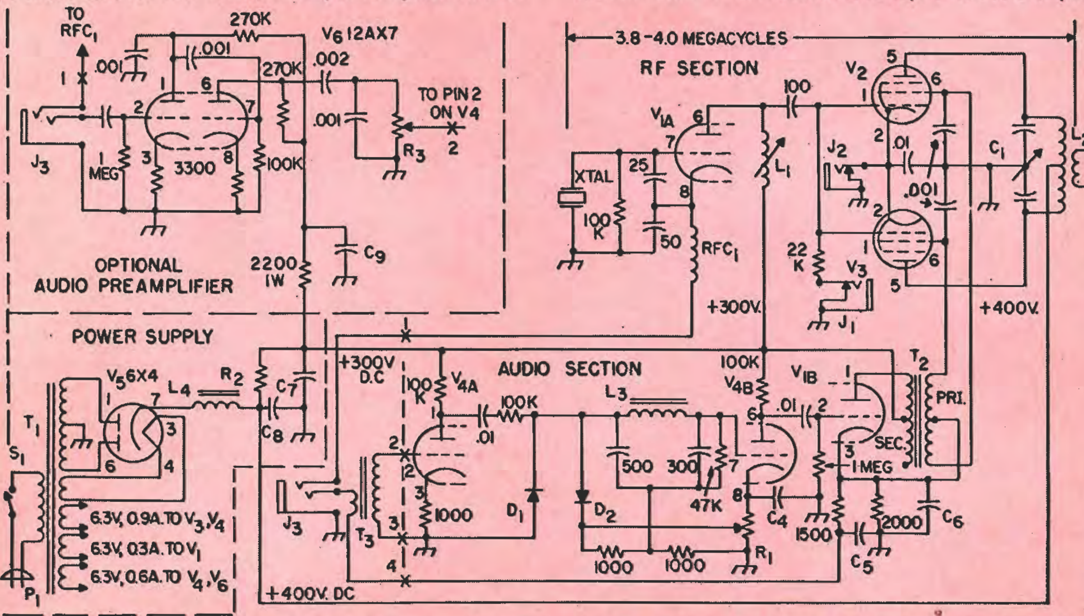

Fig. 2. Schematic diagram for the complete 20-watt double sideband transmitter. The high voltage power supply, shown within dotted lines, may be eliminated if a suitable supply already is available. The optional audio preamplifier appears in the upper left-hand corner. Capacitances given in whole numbers are mica, 500 volts working; those in decimals are disc ceramic, 500 volts working. Resistors are ½ watt unless otherwise specified.

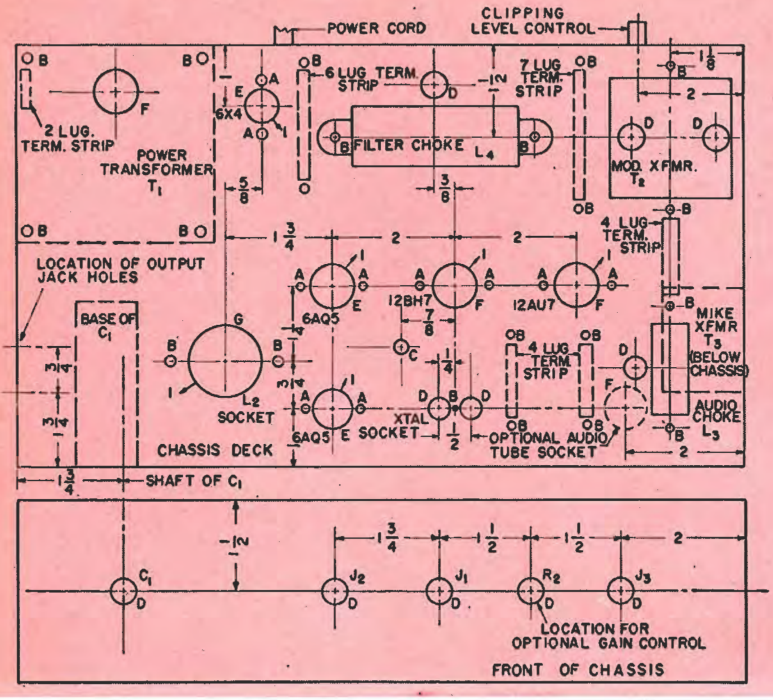

DRILLING LEGEND

"A" drill—No. 32 for miniature tube socket hardware.

"B" drill—No. 26 for fastening terminal strips and larger components.

"C" drill—$\frac{9}{32}$ of an inch in diameter for L_1.

"D" drill—⅜ of an inch in diameter for controls, grommets, etc.

"E" socket punch—⅝ of an inch in diameter for 7-pin miniature tubes.

"F" socket punch—¾ of an inch in diameter 9-pin miniature tubes and grommet under T_1.

"G" socket punch—1 ¼ inches in diameter for L_2.

Fig. 3. Chassis deck and front panel drilling diagram for the double sideband transmitter. Dimensions are shown from the edges of a 7 x 12 x 3-inch deep chassis. Tube sockets should be mounted with pin 1 in the position indicated at each socket hole. The socket for the optional audio preamplifier tube (V_6) and gain control (R_3) are located as shown.

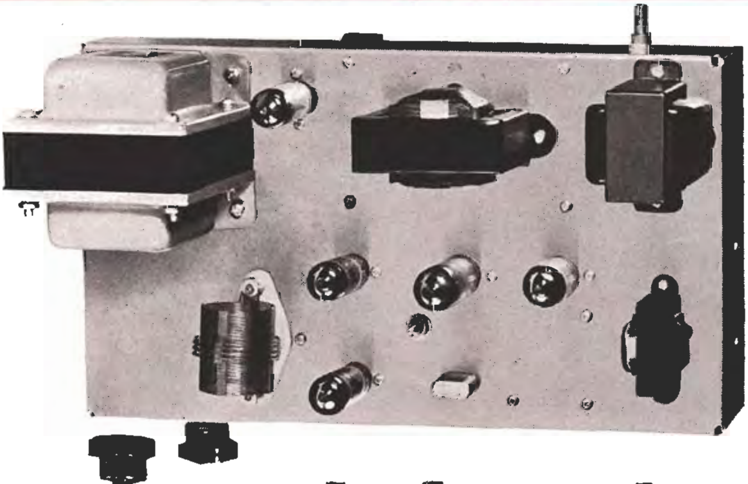

Fig. 4. Top view of the double sideband transmitter, showing the locations of major parts on chassis deck. Check to see that sufficient space is provided for components which differ in size and shape from those listed. The audio filter inductor (L_2) and the microphone transformer (T_3) should be oriented in the positions shown to prevent inductive hum pickup from the power transformer (T_1).

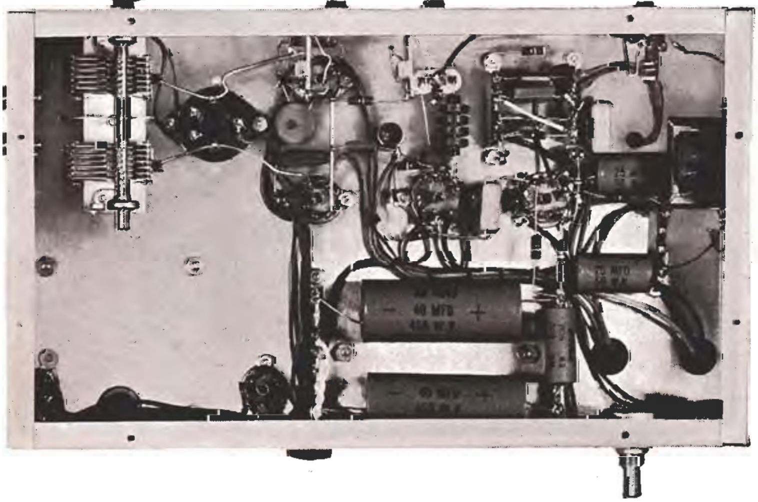

Fig. 5. Bottom view of the chassis, showing placement of smaller parts on the tube sockets and terminal strips. Power wiring is run in corners and across the center of the chassis. Wires carrying audio and RF voltages should be made as short as possible.

matching transformer for a carbon microphone, T_3, is then not required. The audio low-pass filter inductor, L_2, should be mounted beneath the chassis in place of T_3. The gain control between stages in the extra audio amplifier may be mounted midway between J_1 and J_3 on the front of the chassis, as indicated on the drawing.

Small holes for component fastening hardware should be located directly from the matching holes on each part; the drilling diagram simply indicates the presence, but not the precise location, of these holes. Rubber grommets should be placed in all chassis holes for transformer leads before these parts are assembled in the locations shown in the top view photo, Fig. 4.

The smaller parts beneath the chassis are fastened between tube socket lugs and lugs on other parts, or on lug-type terminal strips (Cinch-Jones 2000 series). Most of the audio clipper and low-pass filter components were assembled between two four-lug strips, as shown in the bottom view photo, Fig. 5. Note that the tubular type electrolytic filter and cathode bypass capacitors fit neatly into unused portions of the chassis. Use of metal can type capacitors will require crowding of some components on the chassis deck.

All power and audio circuit wiring was run with No. 20 stranded, insulated hookup wire. Heavy tinned copper wire was used for the lead between the 6AQ5 control grid socket pins; also for connecting the 6AQ5 plate lugs to the socket for L_2 and stators on C_1. Small insulated banana jacks were mounted on one end of the chassis for antenna terminals, but a suitable chassis type coaxial cable connector may be substituted.

The audio preamplifier stage, which may be added to the transmitter at any time, was constructed on a turret type 9-pin miniature socket (Vector No. 8-N-9T), as shown in the photo of Fig. 6. There is adequate room on this socket for all small parts, but the 16-mfd, 450-volt filter capacitor in the plate voltage decoupling filter should be placed in the corner behind T_3.

ADJUSTMENT AND OPERATION

Once the transmitter has been completed, it should be tested on a dummy load consisting of a 15- or 25-watt, 115-volt incandescent lamp bulb. The test procedure consists of the following steps:

1. Apply power and insert a crystal for the 3.8–4.0-megacycle phone band. Depress the microphone push-to-talk switch.

2. Adjust L_1 to resonance while observing the final amplifier grid current on a milliammeter inserted at J_1. A grid current of 3 to 4 milliamperes is required for proper operation.

3. Set R_1 to its midpoint. Adjust L_2 for closest coupling. Whistle into the microphone and adjust C_1 for maximum output power or maximum brilliance of the dummy load lamp.

4. Observe the RF output voltage with an oscilloscope. Either the bowtie or envelope presentation may be used[5]. Whistle into the microphone. Successively adjust the output coupling and clipping level (R_1) for maximum output voltage consistent with ***linearity***[6].

5. Upon successful completion of testing with a dummy load, the transmitter may be connected to a transmitting antenna. The antenna should preferably be a low impedance tuned antenna, such as a dipole or folded dipole. If a long wire antenna is used, an antenna tuner should be used to transform the antenna impedance down to a value suitable for link coupling. When the transmitter is connected to the antenna, step 4 should be repeated to ensure that the output stage is properly adjusted and not overloading on positive audio peaks. The final amplifier cathode current may be metered at J_2. The plate current will have a resting value of about 20 ma and will rise to about 40 ma with modulation.

Although the basic transmitter is crystal controlled, the output of a variable frequency oscillator may be fed into the crystal socket with a short length of 300-ohm twinlead. It is important that this external oscillator have an isolating stage between it and V_{1A} to prevent frequency modulation of the signal. The VFO also should have good long-term frequency stability. Otherwise, the other participants in a round-table QSO will keep reminding you to get back on frequency.

DOUBLE SIDEBAND JUNIOR has sufficient RF output to drive a pentode linear amplifier in the one-kilowatt power class; or a triode linear amplifier in the 400-watt class, such as the LAZY LINEAR (See *G-E HAM NEWS*, July-August, 1949, Vol. 4, No. 4, for details). But even when operated "barefooted," it should have a normal working range of several hundred miles on the 3.8-megacycle band.

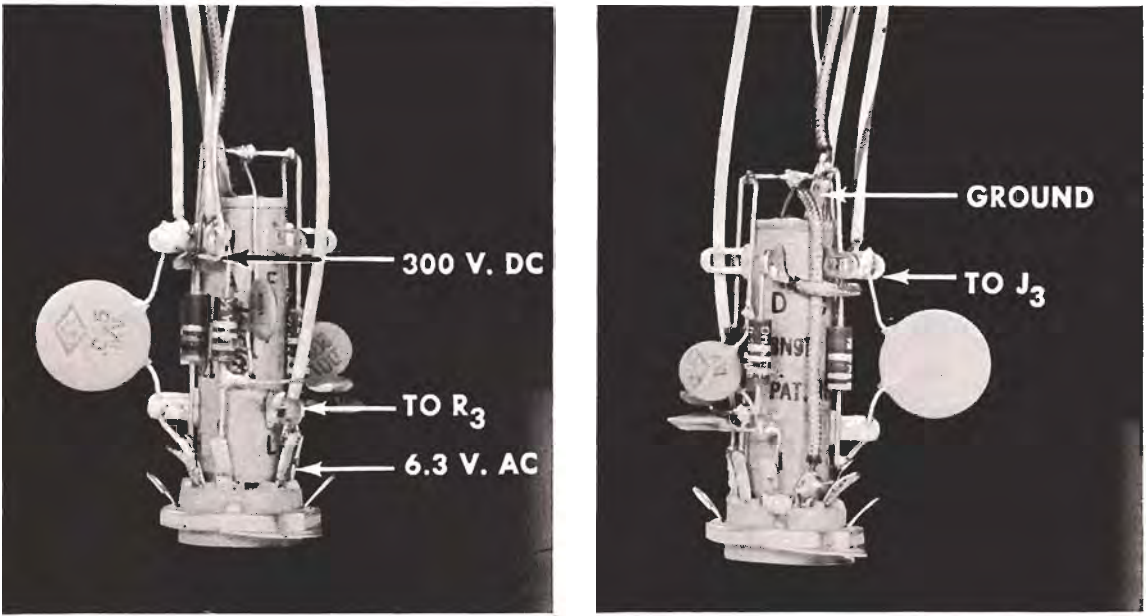

Fig. 6. Detail views of the audio preamplifier stage constructed on a turret type 9-pin miniature tube socket (Vector No. 8-N-9T). Terminals to which external connections are made have been labeled.

EDISON RADIO AMATEUR AWARD
1957 WINNER
James E. Harrington, K5BQT

JUDGES:

E. Roland Harriman, Chairman, American National Red Cross

Rosel H. Hyde, Commissioner, Federal Communications Commission

Goodwin L. Dosland, President, American Radio Relay League

HEROIC TRIO (UPPER RIGHT)—James E. Harrington (center), K5BQT, winner of General Electric's 1957 Edison Radio Amateur Award, is shown with his two companions re-enacting their mission of mercy down the Calcasieu River on a fishing boat last June after Hurricane Audrey. With Sgt. Michael J. McDermott (left), K5CTQ, and Capt. Neal Mabrey, W5VTU—both of the Lake Charles Air Force Base—Harrington unloaded heavy radio gear (CENTER, RIGHT) through flood waters, set up and operated for three days at devastated Cameron, La. More than 1500 emergency messages were handled in the disaster which took more than 500 lives.

At home, K5BQT proudly displays his new call-letter license plate to Mrs. Mae Harrington (CENTER, LEFT); and operates his home station (BOTTOM) while son Bill, 11, looks on.

READERS!

I NEED YOUR HELP!

Since amateur radio is a rapidly growing and continuously changing hobby, I would like to know more about your current interests. Please take a minute or two to read the questions below and mark your answers on the coupon at the bottom of this page. Then clip the coupon, and return address above it, paste them securely on a postal card, and mail it to me.

Your cooperation will help me plan articles on your favorite subjects for future issues of G-E HAM NEWS.

—Lighthouse Larry

(Please check proper boxes on coupon after each question number)

1. Are you a regular reader of *G-E HAM NEWS?* If yes, do you obtain your copy from: a. The counter of a G-E Tube distributor? b. By mail from a G-E Tube distributor? (look for his imprint in address space on back page) c. By paid subscription directly from me? Other?
2. Are you a licensed radio amateur? If yes, which of the following are your principal interests: a. DX? b. Contests? c. Message handling? d. Rag Chewing? e. VHF/UHF? f. Construction? g. Experimenting? Other?
3. Which of the following modes of transmission do you use? a. Code? b. Radioteletype? c. Television? d. Voice? Other?
4. If you transmit voice, do you use: a. Conventional AM? b. Single Sideband? c. Double Sideband? d. Frequency Modulation? e. Other?
5. What items of your station equipment are: a. Home built? b. Manufactured? (check proper box on answer coupon below)
6. What is your: a. Profession or occupation? b. Name and address of firm?
7. Or are you a student of Electronics? Other?
8. What would you like to see in future issues of G-E HAM NEWS?
9. Please fill in your name and home address if you wish to receive the recent back issues of *G-E HAM NEWS.*

(Clip along dotted lines)

—Lighthouse Larry
General Electric Company
Electronic Components Division
Building 267-2
Schenectady, N.Y., U.S.A.

G-E *HAM NEWS* READER SURVEY

(Please mark answers from above questions here. Clip coupon and return address, paste onto postal card and mail)

1. Yes ☐ No ☐ a. ☐ b. ☐ c. ☐ Other__________

2. Yes ☐ No ☐ a. ☐ b. ☐ c. ☐ d. ☐ e. ☐ f. ☐ g. ☐ Other__________

3. a. ☐ b. ☐ c. ☐ d. ☐ Other__________

4. a. ☐ b. ☐ c. ☐ d. ☐ Other__________

5.

	Home Rcvr	Home Xmtr	Mobile Rcvr	Mobile Xmtr
Home Built	☐	☐	☐	☐
Manufactured	☐	☐	☐	☐

6. a.__________ b.__________

7. Yes ☐ No ☐ Other__________

8. __________

9. __________

Sweeping the Spectrum

MEET THE DESIGNER—John K. Webb, K2GZT, took a busman's holiday from his profession as electrical design engineer on synchronous and other communications systems at our Light Military Electronic Equipment Department in Utica, New York. Result—the DOUBLE SIDEBAND JUNIOR transmitter in this issue!

Some measure of Jack's enthusiasm for double sideband can be garnered from his many presentations on this subject at trade shows, amateur radio conventions, hamfests, and club meetings. Of course, this little transmitter usually accompanies him as his favorite "conversation piece."

First licensed as W0AHM in Kansas during 1947, Jack's association with electronics includes AM broadcasting and the U.S. Army Signal Corps, before joining General Electric. Although he has tried 'em all—CW, FM, AM and SSB—Jack can now be found on 14-megacycle phone pushing a pair of GL-6146's in a—you guessed it—double sideband rig!

* * *

When the judges for the 1957 Edison Award met late in January, they not only chose K5BQT as the principal winner, but drafted a public service commendation to be awarded to the following officially nominated candidates for the 1957 award:

W1MCL, W2FGV, W2IIN, W2RUF, K2KGJ, K2KMV, W3ECP, W3UVK, W4DRC, W4FUS, W4HUL, W4NTO, W4RRH, W4SBI, W4SDR, K4KCV, W5KRJ, W5LZW, W5SUB, W5SYL, W5TIE, W5UCT, W6AAQ/1, W7BA, W7GNJ, W7IOQ, W7OEX, W8BUQ, W8CTZ, W8FAZ, W8IMH, W8YWU, W8YGQ, W9BUK, W9VEY, W0BDR, W0CPI, W0DSP, W0KCK, W0LF, W0WMA, K0AFW, K0EDF; and a posthumous commendation to W8HSG.

BIBLIOGRAPHY OF ARTICLES ON DOUBLE SIDEBAND

[1] Costas, J. P., "Synchronous Communications," *Proceedings of the I.R.E.*, December, 1956.

[2] Costas, J. P., "Single Sideband. Is It Really Better Than Amplitude Modulation?", CQ, January, 1957.

[3] Costas, J. P., "Discussion of the Single-Sideband Issue," *Proceedings of the I.R.E.*, April, 1957.

[4] Webb, J. K., "A Synchronous Detection Adapter for Communications Receivers," CQ, June, 1957.

[5] Harris, D. S., "DSB Considerations and Data," CQ, October, 1957.

[6] Webb, J. K., "Modulating the DSB Transmitter," CQ, March, 1958.

Eaton, R. C., "Two Sidebands for Less than the Price of One," CQ, September, 1957.

Najork, Jack, "A 100 Watt DSB Mobile Transmitter," CQ, March, 1957.

Stoner, D. L., "Double Sideband with the Heath DX-100," CQ, April, 1957.

Jones, F. C., "Low Cost DSB-AM Amplifiers," CQ, November, 1957.

Costas, J. P., "Phase-Shift Radio Teletype," *Proceedings of the I.R.E.*, January, 1957.

HOW TO GET G-E HAM NEWS

G-E HAM NEWS may be obtained free of charge from your local G-E tube distributor—or, for $1 per year, G.E. will mail it directly to your home. Write to: G-E HAM NEWS, Electronic Components Division, General Electric Co., Schenectady, N. Y. This subscription plan is available only to persons in the United States, Alaska, Hawaii and Panama Canal Zone. Canadians should address their requests to Canadian General Electric Co., Ltd., 189 Dufferin Street, Toronto 3, Ontario, Canada. In forty other countries, G-E HAM NEWS may be obtained through International General Electric distributors.

Electronic TUBES

G-E HAM NEWS

Available FREE from

G-E Electronic Tube Distributors

published bi-monthly by

ELECTRONIC COMPONENTS DIVISION

GENERAL ELECTRIC

Schenectady 5, N. Y.

In Canada

CANADIAN GENERAL ELECTRIC CO., LTD.

189 Dufferin St., Toronto 3, Ontario

E. A. NEAL, W2JZK—EDITOR

Printed in U.S.A.

VOL. 13—NO. 2

MARCH-APRIL, 1958

Form 3547 Requested

Electronic
TUBES

G-E HAM NEWS

Copyright 1958 by General Electric Company

GENERAL ELECTRIC

MAY–JUNE, 1958

VOL. 13—NO. 3

PACKAGED VHF EXCITERS

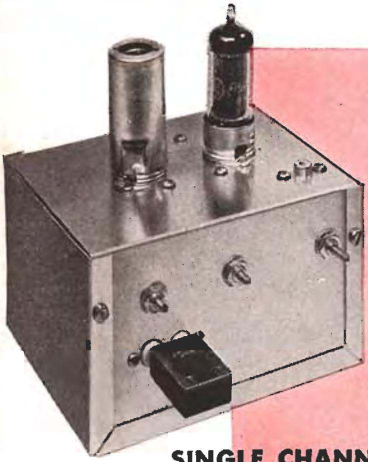

SINGLE CHANNEL

28 OR 50 MEGACYCLES, 3 WATTS

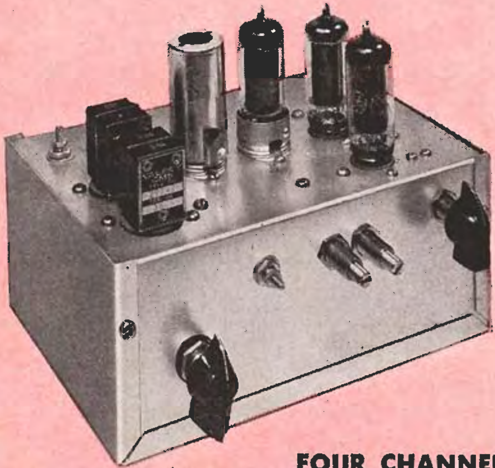

FOUR CHANNELS

144 MEGACYCLES, 6 WATTS

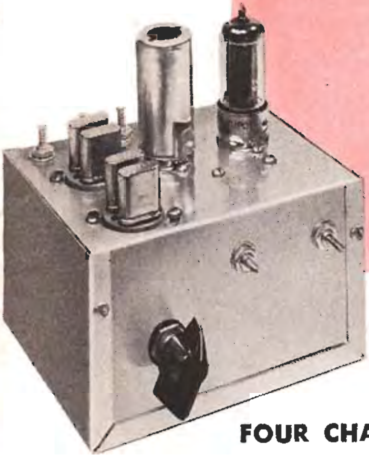

FOUR CHANNELS

28 OR 50 MEGACYCLES, 3 WATTS

The old saying, "Good things come in small packages," was the watchword in designing these simple, compact exciters for 28-, 50- and 144-megacycle amateur transmitters. Try the circuits—and unitized construction ideas—in your next transmitter for one or more of these bands.

—Lighthouse Larry

CONTENTS

PACKAGED VHF EXCITERS

It's smart to build new equipment for your amateur station in small units for improved flexibility, shielding and ease of making modifications. This concept is demonstrated in packaged exciter units for transmitters operating in the 28-, 50- and 144-megacycle amateur bands. The 28- and 50-megacycle exciters will deliver about 3 watts, and the 144-megacycle exciter about 6 watts of power output. This power is sufficient to drive most pentode Class C power amplifiers in the 100-watt power class; or, for certain amplifier tubes capable of handling several hundred watts input.

CIRCUIT DETAILS

The basic single channel exciter unit for the 28- and 50-megacycle bands, as shown in the main schematic diagram, Fig. 1, has three stages, but only two tubes. All stages are biased for Class C operation. The triode section of a 6U8 triode-pentode is an oscillator for crystals in the 6- to 9-megacycle frequency range. *TABLE I* lists the choice of crystal frequencies for each band, and the frequencies to which the resonant circuits in each stage are tuned for output on the 28-, 50- and 144-megacycle bands.

There may be a few eyebrows raised over our selection of a fundamental frequency type crystal oscillator instead of an overtone circuit, especially since the recent trend has been to operate the oscillator as high in frequency as possible. However, the fundamental type oscillator, operated at low power level, assures the excellent frequency stability necessary for double sideband and other suppressed carrier transmitters—and even for CW operation without the "chirps" and "yoops" which readily identify so many VHF transmitters using overtone type oscillator circuits.

Some amateurs may prefer the convenience of a multi-channel type oscillator, rather than having to plug in a different crystal each time a shift in operating frequency is made. The four-channel oscillator circuit, shown in Fig. 2, permits the use of any combination of crystals for a specific band, as listed in *TABLE I*, with a separate plate circuit coil, L_{1A} to L_{1D}, for each crystal.

If all crystals for a specific band are within a fraction of a megacycle of each other in frequency—say 8.334 to 9.000 megacycles, for a 50-megacycle exciter—only a single coil, L_1, is required. It is possible to adjust the tuning slug in L_1 for proper operation of the oscillator over this wide a frequency range.

The pentode section of the 6U8 amplifies either the second, third or fourth harmonic of the oscillator frequency, depending on the crystal frequency, and band upon which output is required. The third stage, a 6CL6 pentode, always operates as a frequency doubler. The RF output from the 6CL6 stage is coupled to a coaxial cable with a 3-turn link coil, L_4, wound around the "cold" end of L_3.

Coil L_2 tunes to 24—27 megacycles, and L_3 to 48—54 megacycles, with only the tube and stray capacitances across each. To adapt these tuned circuits for operation on the 28-megacycle band, simply add the additional capacitances C_2 and C_3 across L_2 and L_3, shown in dotted lines on the schematic diagram.

To obtain output on the 144-megacycle band, a fourth stage—a push-pull frequency tripler with a pair of 6CL6's—is added to the exciter. As shown in the tripler schematic diagram, Fig. 3, this stage is driven by closely coupling the grid coil, L_5, to L_3 in the 6CL6 doubler stage; the two circuits thus form a bandpass coupler covering the 48—49.3-megacycle range. The plate tank circuit, L_6—C_5, is tuned to the 144-megacycle band. Output from this stage is obtained from a 2-turn link coil, L_7, inserted at the center of L_6.

The four-stage exciter can be used on both the 50- and 144-megacycle bands by winding the link coil, L_4, around L_3 and connecting it to a separate RF output jack. Some means of disabling the push-pull 6CL6 stage for 50-megacycle operation should be included in the external power circuitry. The tuning slugs in coils L_1, L_2, and L_3 probably will have to be readjusted when changing from 50- to 144-megacycle output.

A suggested circuit by which the heater and plate power may be switched between two exciters is shown in the schematic diagram of Fig. 4. If desired, a third switch position on S_2, and third power socket, can be added to accommodate a third exciter.

Metering of the control grid currents in the second, third and fourth stages of the exciters is accomplished by measuring the voltage drop across a portion of the grid bias resistance in each stage. Suggested values for the metering circuit resistors—R_1, R_2, R_3 and R_4 in the various schematic diagrams—have been tabulated in ***TABLE II***. Select the proper resistors for the type of multimeter, or milliameter, that will be used to tune up the exciter. Some values listed are not exact for a specific full-scale current reading; they have been rounded off to the nearest value for 10 percent tolerance resistors.

The screen voltage connections to all tubes have been brought out to a separate pin on J_1, so that this circuit can be keyed (through a suitable keying relay, for safety) for CW operation.

MECHANICAL DETAILS

Miniboxes were found to be convenient chassis for the VHF exciters, since they provide nearly complete shielding and easy access to the under-chassis corners. The 4 x 5 x 3-inch size *Minibox* has adequate space for the three-stage exciters for the 28- and 50-megacycle bands. All components were mounted on the half of the *Minibox* which forms an open-end chassis, as shown in the drilling diagram, Fig. 5.

(Continued on page 5)

TABLE I—OPERATING FREQUENCY CHART

OUTPUT BAND MC.	CRYSTAL AND L_1—C_1	2ND STAGE L_2—C_2	3RD STAGE L_3—C_3 (L_5—C_4 144 MC.)	4TH STAGE L_6—C_5 (144 MC. ONLY)
28 MC.	7.000—7.425 MC.	14.0—14.850 MC. (doubler)	28.0—29.70 MC. (doubler)	None
50 MC.	6.25—6.75 MC.	25.0—27.0 MC. (quadrupler)	50.0—54.0 MC. (doubler)	None
50 MC.	8.334—9.0 MC.	25.0—27.0 MC. (tripler)	50.0—54.0 MC. (doubler)	None
144 MC.	6.000—6.166 MC.	24.0—24.666 MC. (quadrupler)	48.0—49.333 MC. (doubler)	144.0—144.8 MC. (tripler)
144 MC.	8.000—8.222 MC.	24.0—24.666 MC. (tripler)	48.0—49.333 MC. (doubler)	144.0—144.8 MC. (tripler)

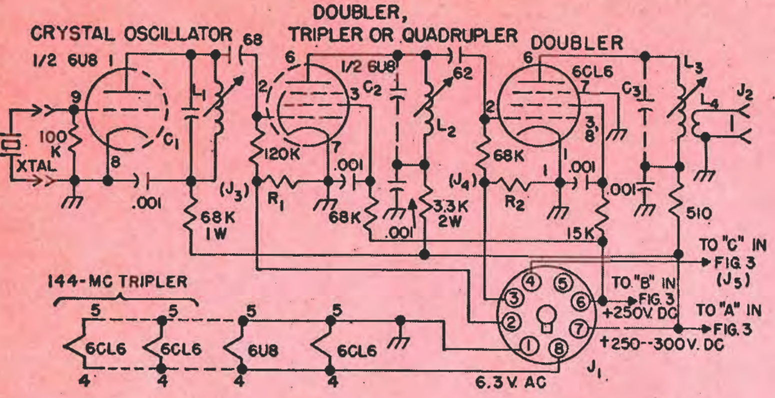

Fig. 1. Basic schematic diagram for the packaged VHF exciters. All capacitance values given in whole numbers are mica, 500 volts working. Capacitance values given in decimals are disc ceramic, 500 volts working. Resistances are ½-watt, plus or minus 10-percent tolerance, unless otherwise specified. Separate phone tip jacks for metering grid currents (J_3, J_4 and J_5) can be installed on the chassis, instead of running the leads connected to pins 2, 3 and 4 on J_1 to the external metering circuit, shown in the diagram of Fig. 4.

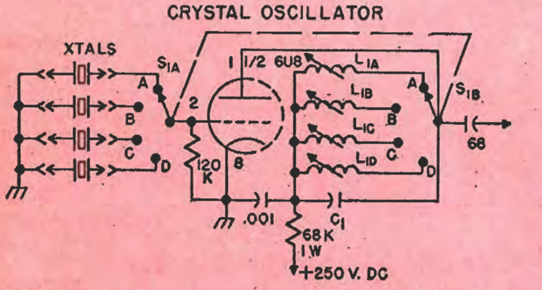

Fig. 2. Schematic diagram for the optional four-channel crystal oscillator circuit. Coils L_{1A} to L_{1D} are the same as L_1.

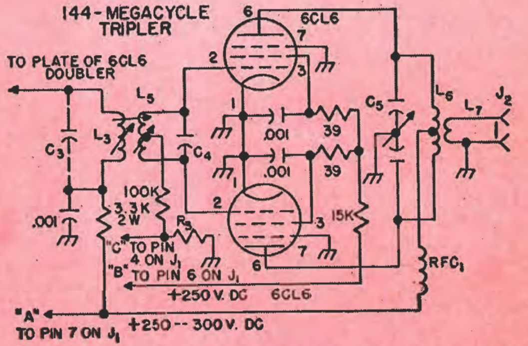

Fig. 3. Schematic diagram of the push-pull tripler circuit for the 144-megacycle band. The power metering and RF driving circuits connect to those in the basic schematic diagram Fig. 1.

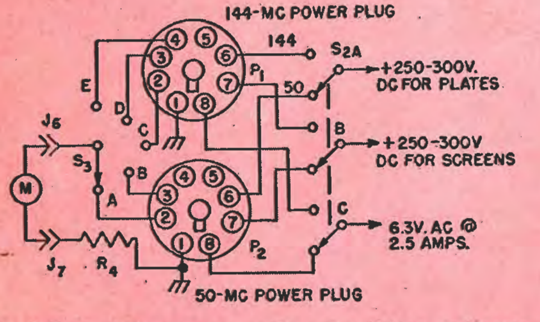

Fig. 4. Suggested power connection and switching and metering circuits for use with two packaged exciters. Additional power connectors can be added to the circuit as required.

TABLE II—METERING RESISTORS

Range & Resistance	(0—1 ma.) R_1 & R_2	(0—5 ma.) R_3	R_4
Meter Only			
0—1 ma.	1,000	12	0
0—0.2 ma.	62	10	0
0—0.05 ma.	56	10	0
0—5 volts (5,000 ohms/v.)	6,200	1,000	24,000
0—5 volts (20,000 ohms/v.)	5,100	1,000	91,000

PARTS LIST

C_1. . 62 mmf NPO ceramic, or mica, 500 volts
C_2. . 47 mmf NPO ceramic, or mica, 500 volts (See Text)
C_3. . 39 mmf NPO ceramic, or mica, 500 volts (See Text)
C_4. . 6.8 mmf NPO ceramic, 500 volts
C_5. . 2.7—10.8 mmf per section, butterfly variable capacitor
J_1. . Male octal plug with chassis mounting plate (Amphenol 86-PM-8 and 78-RS plate)
J_2. . Midget chassis type phono jack
J_3 to J_6. . Insulated phone tip jack
J_7. . Non-insulated phone tip jack
L_1 to L_7. . Coils, see COIL TABLE
M. . Meter see TABLE II
R_1 to R_4. . Meter shunt resistors, see TABLE II
RFC_1. . 1.8 uh RF choke (Ohmite Z-144)
S_1. . Two-pole, four-position ceramic tap switch (Centralab No. PA-2003 six-position switch set for four positions)
S_2. . Three-pole, two-position tap switch (three positions if three exciters are used)
S_3. . One-pole, five-position tap switch

COIL TABLE

L_1, L_2, L_3, and L_5 are wound on ⅜ of an inch diameter iron slug-tuned coil forms, 1 $\frac{1}{16}$ inches long (Cambridge Thermionic Corp. type CTC-LS-3)
L_1. . 4.2—8.7 uh coil, 30 turns of No. 30 enameled wire closewound ⅜ of an inch long; or, CTC type LS-3 5-MC wound coil.
L_2. . 1.4—2.0 uh, 18 turns, No. 22 enameled wire closewound ½ of an inch long
L_3. . 0.4—0.6 uh, 11 turns, No. 22 enameled wire spacewound ½ of an inch long
L_4. . 3 turns, No. 16 tinned or insulated wire, ½ of an inch in diameter, wound over by-passed end of L_3
L_5. . Same as L_3, except with tap at center
L_6. . 0.12 uh, 4 turns, No. 14 tinned wire, ⅝ of an inch in diameter, 1⅜ inches long, 4 turns per inch with a ⅜ of an inch space in center for L_7
L_7. . 2 turns, No. 14 tinned wire, ⅝ of an inch in diameter, $\frac{1}{16}$ of an inch spacing between turns inserted at center of L_6

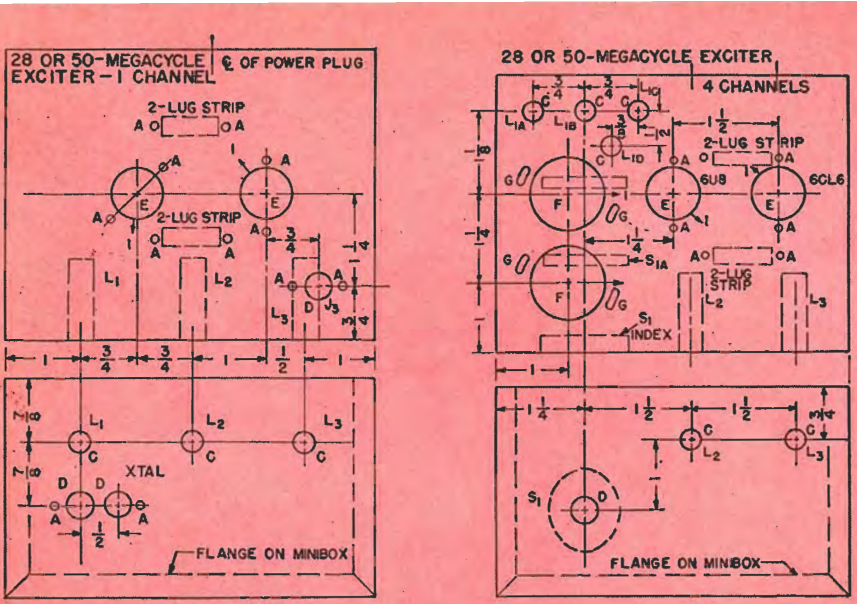

DRILLING LEGEND

"A" drill—No. 32 for No. 4 machine screws.

"B" drill—No. 26 for No. 6 machine screws.

"C" drill—$\frac{9}{32}$ of an inch in diameter for coil forms.

"D" drill—⅜ of an inch in diameter for S_1 and J_2.

"E" socket punch—¾ of an inch in diameter for 9-pin miniature tube sockets.

"F" socket punch—1 $\frac{1}{16}$ inches in diameter for octal sockets.

"G" slots—⅛ x ¼ of an inch in size for hardware.

Fig. 5. Drilling diagrams for the 4 x 5 x 3-inch *Miniboxes* in which exciters for the 28- and 50-megacycle bands were assembled: Left—the single channel exciter; right—the four-channel exciter. Any of the following boxes may be used: Bud CU-3005; ICA 29340; Premier AMC-1005; Wyco E-923; and LMB TF-779.

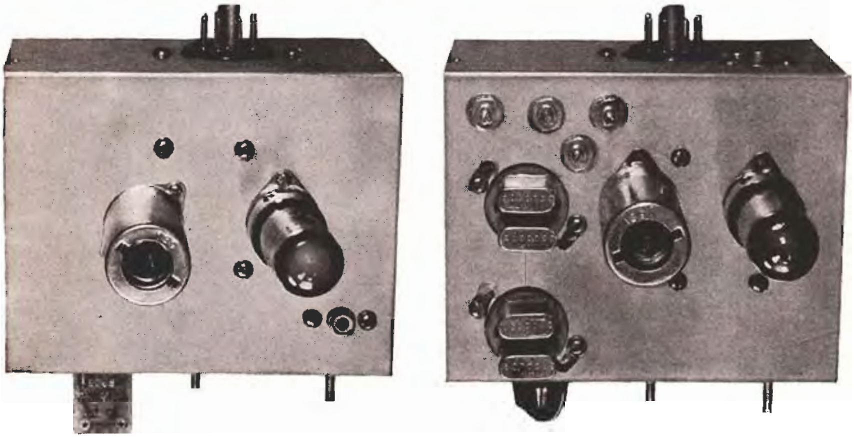

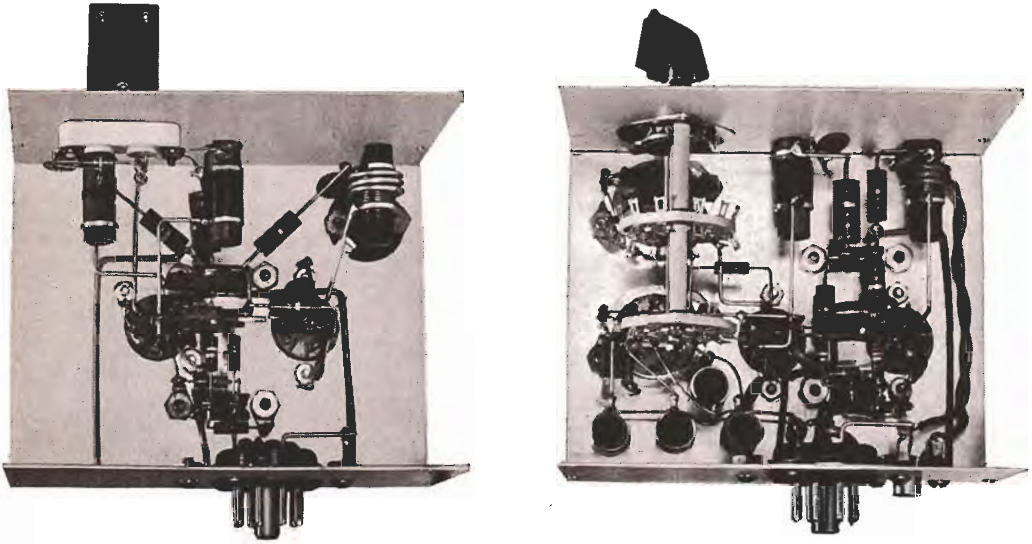

Fig. 6. Top and bottom view photographs of the exciters for 28 and 50 megacycles. Left—the single channel exciter. Right—the four-channel exciter. On both models the 1 $\frac{1}{16}$-inch diameter socket hole for the power connector, J_1, was punched 1½ inches down from the chassis deck; and 3 inches in from the oscillator end of the chassis.

(Continued from page 2)

A similar parts layout was followed for both the single- and four-channel exciters; the principal difference being that the tube socket locations were shifted slightly on the four-channel exciter to allow more room for the crystal sockets and oscillator plate circuit coils, L_{1A} to L_{1D}. Comparison of the top and bottom view photographs of the exciters, Fig. 6, will show that the four-channel exciter appears more complex than it actually is, largely due to the use of a two-wafer tap switch for S_1.

Slots were provided for the machine screws which fasten the octal sockets for the crystals in place; this allows the sockets to be oriented so that the crystal holders run parallel with the chassis. The octal sockets will accommodate crystal holders having 0.094-inch diameter pins spaced 0.486 of an inch. Four special crystal sockets may be substituted, particularly if crystal holders having 0.050-inch diameter pins will be employed, by drilling the chassis differently.

The RF output connector, J_2, was mounted on the chassis deck, above L_3, in the single channel exciter. This permitted the link coil, L_4, to be suspended from the lugs on J_2. In the four-channel exciter, J_2 was located on the rear of the chassis. A single length of insulated hookup wire was wound around L_3 to form L_4, and the excess wire was twisted and run back to J_2. The power connector, J_1, also mounts on the rear of the chassis in the location shown in the bottom view.

A larger *Minibox*, 5 x 7 x 3 inches in size, provides the additional space required for the push-pull 6CL6 tripler stage in the 144-megacycle exciter model. The parts layout for the first three stages, as shown in the drilling diagram for the four-stage exciter, Fig 7, is essentially similar to the four-channel, three-stage exciter previously described. The bottom view photograph shows that somewhat more space is available for the oscillator plate coils on the 5-inch-wide chassis. In this model, a single wafer tap switch was used for S_1.

Sockets for the 6CL6 tubes and other components in the tripler stage have been positioned to permit very short connections. The coils in the bandpass coupler, L_3 and L_5, were mounted on a small angle bracket, marked "A," instead of being fastened to the front wall of the chassis. Another angle bracket, marked "B," supports the plate tuning capacitor, C_5. The dimensions and drilling details for both brackets are shown in Fig. 8.

Shafts which extend these three tuning adjustments out through the front panel were made from ¼-inch diameter brass rod. Drill and tap a hole for a 6–32 machine screw in one end of the 1½-inch long shafts for L_3 and L_5, and saw a slot for a screwdriver in the other end. After the coils have been mounted, first assemble a 6–32 hex nut on the slug screws, then run the extension shaft onto this screw about six turns and tighten the lock nut against the end of the shaft. The shaft may be run through a ¼-inch diameter hole in the chassis, or through a panel bearing, as illustrated.

Since C_5 has a $\frac{3}{16}$-inch diameter shaft, a special extension shaft was made by drilling a $\frac{3}{16}$-inch diameter hole through a ½-inch length of brass rod ⅜ of an inch in diameter. Then, about one-half of the hole is enlarged to ¼ of an inch in diameter, and a 1¼-inch length of ¼-inch diameter brass rod is soldered into it. Finally, a small hole is drilled and tapped for a set screw, as shown in the bottom view. This extension shaft should be inserted through the ¼-inch diameter hole in the chassis, or panel bearing, *before* C_5 and its mounting bracket is assembled.

The tie points which support the resistors and other small parts are located in the positions indicated on the drilling diagram for each exciter. Most resistors are soldered directly between the lugs on components to which they are connected. All disc ceramic by-pass capacitors should be fastened in place with the shortest possible leads; those which bypass the screen grids of tubes in the second, third and fourth stages should be connected between the screen grid and cathode lugs on the tube sockets. All grid and plate leads are No. 16 tinned copper wire, also as short as possible. Power leads are insulated No. 20 stranded hookup wire, run close to the chassis wherever possible to reduce RF pickup. Most other constructional details should be apparent after studying the illustrations.

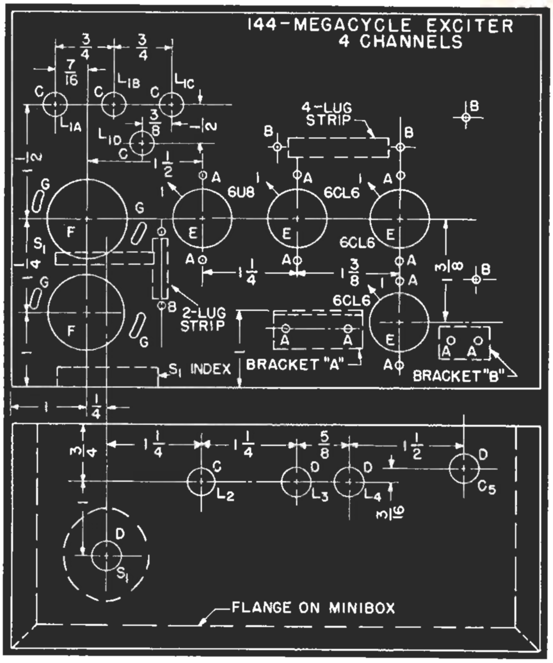

Fig. 7. Drilling diagram for the 5 x 7 x 3-inch *Minibox* in which the four-channel exciter for the 144-megacycle band was constructed. Brackets "A" and "B" are located in the positions shown with the vertical portions of both brackets away from the chassis front wall. Suitable chassis boxes are: Bud CU-3008; ICA 29343; Premier AMC-1008; Wyco E-926; and LMB TF-782.

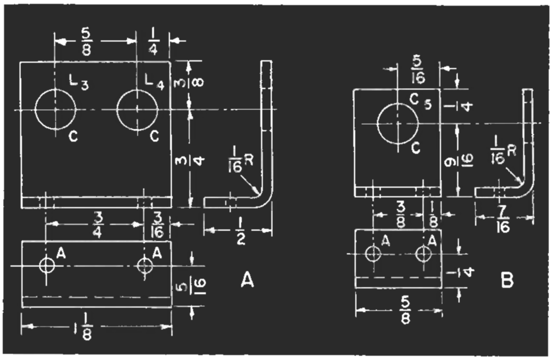

Fig. 8. Detail drawings for fabricating the angle brackets used to mount the following components in the 144-megacycle exciter: "A"—coils L_3 and L_5; and "B"—capacitor C_5. Holes on the main chassis should be marked for location from these brackets.

OPERATION

To make the tune-up procedure more meaningful, we'll assume that a four-channel, 50-megacycle exciter is being adjusted for broadband operation between 50 and 51 megacycles (crystal frequencies between 8.334 and 8.500 megacycles). Two crystals, one each at approximately 8.375 and 8.450 megacycles (exciter output frequencies of 50.25 and 50.7 megacycles, respectively) should be plugged into positions "A" and "B" in the crystal sockets.

After the usual final wiring check, plug in the 6U8 oscillator tube and apply heater power. If the tube heater lights properly, plug a 0—1 milliameter into the metering tip jacks, J_6 and J_7. Turn the crystal switch, S_1, to position "A" (6.375-megacycle crystal); the meter switch, S_2, to position "A"; and apply plate voltage to the exciter. Turn the tuning slug in L_{1A} through its adjustment range. When the oscillator starts running, about 0.3 milliamperes of grid current in the second stage should be measured on a 0—1 milliameter. Adjust the slug so that the oscillator starts immediately each time plate voltage is applied.

Next, plug in the 6CL6 doubler tube, turn S_1 to position "B" (8.450-megacycle crystal), set S_3 on position "B," and tune the slug in L_2 for maximum grid current —about 1.5 milliamperes—in the 6CL6 stage. Connect a suitable dummy load to J_2, reset S_1 to position "A," and tune the slug in L_3 for maximum output. A No. 40 or 47 pilot lamp, soldered with short leads to a midget phono plug, is a handy dummy load for test purposes. The pilot lamp should light to full brilliancy if the exciter is delivering adequate power output.

The exciter should now be capable of delivering nearly constant power output over the range of 50 to 51 megacycles. Finally, adjust the slugs in L_{1C} and L_{1D} for maximum grid current with S_3 in position "A," with crystals plugged into the remaining two crystal sockets.

When the 50-megacycle exciter is coupled to the grid circuit of a succeeding Class C power amplifier stage through a short length of coaxial cable plugged into J_2, the tuning of L_3 should again be checked so that maximum grid current is read in the power amplifier at 50.25 megacycles. If the amplifier grid tank circuit is tuned for maximum grid current with the exciter driving it at 50.5 megacycles, little variation in grid current should be measured over the 50- to 51-megacycle range.

When tuning up the 144-megacycle exciter, switch position "C" on S_3 is used to meter the grid current in the second stage when adjusting the oscillator coil, L_1; position "D" reads the 6CL6 doubler grid current; and position "E" meters the grid current in the push-pull 6CL6 tripler stage. The procedure outlined for tuning L_1 and L_2 in the 50-megacycle exciter is again followed; then the meter is switched to position "E" and L_3 is tuned for maximum grid current at a frequency of 48.3 megacycles (crystal, 8.05 megacycles). The grid coil, L_5 is tuned for maximum grid current at a frequency of 48.9 megacycles (crystal, 8.15 megacycles). This should result in little variation in grid current in the tripler stage over the range of 48.0 to 49.3 megacycles.

The tripler plate circuit tuning capacitor, C_5 may be tuned to 144.5 megacycles if most operating will take place in the 144- to 145-megacycle range. However, if the entire power output of the exciter is required to drive a succeeding power amplifier, C_5 probably will have to be retuned each time a shift in operating frequency greater than 200 kilocycles is made.

Any of the popular twin pentode power tubes designed for operation in the VHF spectrum—815, 829B, 5894—or a pair of 6146's—in push-pull circuits, make an excellent power amplifier to follow these exciters. Circuits and construction ideas for amplifiers using these tubes may be found in the list published below.

829B and 5894:

1. "144-megacycle Double Beam-tetrode Power Amplifier," *QST*, March, 1946, page 55; or, ***ARRL Handbook***, VHF Transmitters chapter, 1948 to 1952 editions.
2. "A 100-watt RF Amplifier for 50 and 144 Megacycles," ***ARRL Handbook***, VHF Transmitters chapter, 1953 and 1954 editions.
3. "A 6- and 2-meter 829B FM-AM Transmitter," *CQ*, May, 1949, page 28.
4. "829B Transmitter for 10 and 6 Meters," ***Radio Handbook***—Twelfth Edition, Low Power Transmitters chapter, page 71.

815:

1. "A 60-watt Transmitter for 50, 28 and 144 Megacycles," ***ARRL Handbook***, 1948 to 1951 editions.

6146:

1. "Step-by-step Transmitter for the VHF Man—Part II," *QST*, November, 1954, page 41; or, ***ARRL Handbook***, VHF Transmitters chapter, 1955 to 1958 editions.

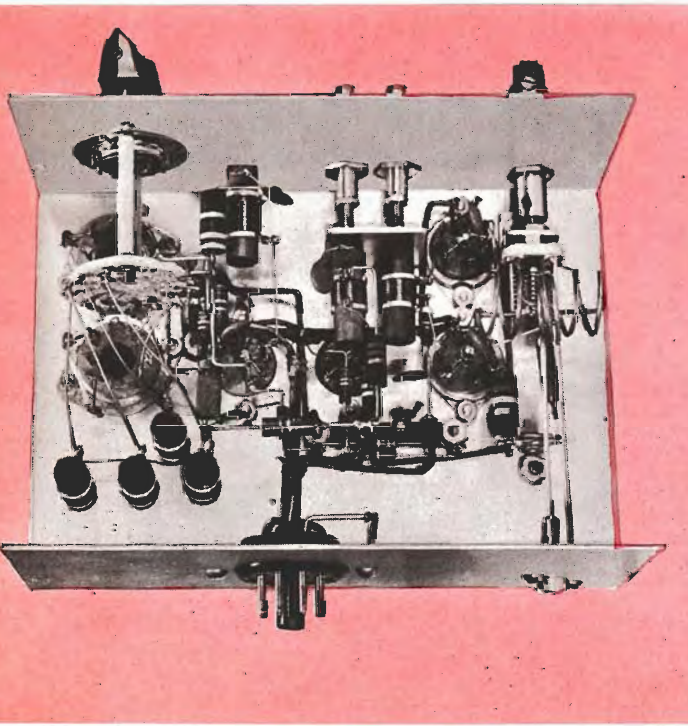

Fig. 9. Bottom view photograph of the 144-megacycle exciter. The crystal switch, in this model, S_1, was assembled from a Centralab PA-300 miniature rotary switch index assembly; and a PA-3 two-pole, 6-position ceramic tap switch section. One ⅞-inch and one ⅜-inch long spacer was assembled on each threaded rod between the switch wafer and the index plate. The output link coil, L_7, is wound with 3-inch leads spaced about ¼ of an inch, for the connections to J_2. Instructions for making and assembling the extension shafts on L_3, L_5 and C_5 are given in the text under MECHANICAL DETAILS. The power connector, J_1, was located in the same position as described for the three-stage exciters, Fig. 6.

SWEEPING *the* SPECTRUM

MEET THE DESIGNER—K2DBS, William F. Kail, a sales engineer with G.E.'s Communication Products Department, has pointed the way toward improving the frequency stability of VHF transmitters with his PACKAGED VHF EXCITERS, described elsewhere in this issue of *G-E HAM NEWS.* The oscillator and frequency multiplier circuits, similar to those found in G.E.'s fine *Progress Line* of two-way mobile radio equipment, meet the stringent frequency stability and driving power requirements of Bill's high-level double sideband balanced modulators for the VHF bands.

Two other call letters, W3UQK and W8OQT, have been held by K2DBS since his amateur radio career started in 1951. Bill now resides in North Syracuse, New York, near G.E.'s Electronics Park plant. As you may have surmised, Bill is among that growing multitude of hams whose main interest is the furtherance of communications on the VHF amateur bands.

* * *

The flood of replies to my READER SURVEY (See *G-E HAM NEWS,* MARCH–APRIL, 1958, Vol. 13, No. 2; page 7) is just being tabulated, but a quick check indicates that a clear majority of radio amateurs want more information on single sideband, double sideband and simple, but efficient, equipment for the VHF bands.

There also have been many requests for information on simple test equipment for the ham shack, plus instructions for calibrating it. Many of you want information on making simplified tests and measurements on transmitters, receivers and antennas.

I certainly appreciate the interest of those persons who have returned the survey coupon. If you haven't seen that issue, pick up a copy from your nearest G-E tube distributor; or, send a postal card to me, requesting it. Of course, it isn't necessary to use the survey coupon if you don't wish to cut it out of that issue; just write your answers on a postal card and send it to the following address: Lighthouse Larry, General Electric Company, Electronic Components Division, Building 267-2, Schenectady, N. Y., U.S.A.

* * *

Here's good news for all radio club television interference (TVI) committees (or for anyone with TVI problems) who never did garner a copy of the book *Television Interference* originally published by Philip S. Rand, W1DBM. A new and up-to-date book, ***Television Interference, Its Causes and Cures,*** has now been made available by the Nelson Publishing Company of Redding Ridge, Connecticut. This is a ***Television Interference Handbook***—not a collection of reprinted magazine articles.

The new book may be ordered directly from that firm, or through the Radio Society of Great Britain. It also is available from numerous electronic parts distributors in the United States and Canada. The price is a nominal $1.75 in the United States; $2.00 elsewhere.

Just about every conceivable TVI situation is covered, including chapters on the sources, types and means of locating TVI; shielding and filtering; special VHF problems; design and use of filters; generation of harmonics in external devices (oxidized joints between metal objects), industrial, medical and public utility TVI; bibliography of magazine articles on TVI; list of TVI committees; and finally, excerpts from the FCC rules concerning TVI. Need I say more?

And while we're speaking of W1DBM, many of you will recall that he received a special citation plaque from the judges of G.E.'s annual Edison Radio Amateur Award program for his outstanding research and contributions to the solution of TVI problems, both in the amateur radio and industrial fields.

* * *

My LOG FORM QSL card has just blossomed out in a new three-color combination! No—we didn't call in a color stylist to create it—the colors are the same as those on the latest G-E tube carton—orange-red, grey and black.

There are now millions of these cards in circulation. You may have seen them in other colors—beige, blue or maroon—but we firmly believe that the new three-color card is the sharpest! If you'd like to examine a sample card—Form 73B—just write, "Sample QSL," and your name and address on a postal card—or one of your present QSL cards—and send it to me.

The cards are furnished without imprinting, packaged in quantities of 250, all ready to mail, postpaid, to those persons who send in a check or money order for $1.00. Of course, if you need more cards (500, 750, 1000, or other multiples of 250), we'll ship a real big package of them to you at the same rate. And be sure to include your complete mailing address—we want to make sure that your cards arrive without delay.

* * *

We've received a great number of requests for an updated edition of the G-E HAM NEWS DX LOG issue since it was last revised (see *G-E HAM NEWS,* January–February, 1956; Vol. 11, No. 1). Altogether, four editions of this issue have been published.

A fifth revision is now in the works; and in it, the spacing between lines will be expanded to allow more room for large writing. Also, a couple countries will be placed on the correct continents; a special listing of outdated call-letter prefixes and countries no longer on the official list will be added; and, finally, the whole issue will be printed on less glossy paper for greater ease in writing.

You, the many users of our DX LOG, are best qualified to know what improvements, other than the above, should be included. If you let me know soon, giving your thoughts on any changes or additional features you will find handy, we'll have time to include as many features as possible.

And if you're anxious to know when this new DX LOG will be available, your local G-E tube distributor should have them early in August.

—*Lighthouse Larry*

VHF EXCITER/K2DBS

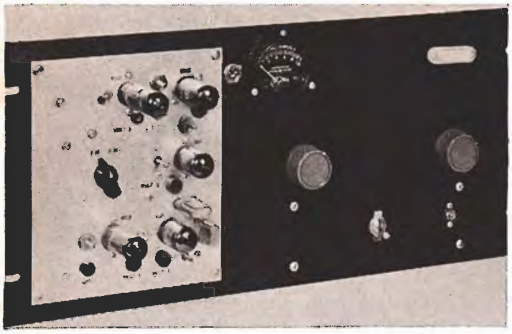

Looking for still other VHF exciter construction ideas? Here's how the designer of the packaged exciters, K2DBS, has combined two exciters on a single flat metal plate for his own VHF station. The view above (left) shows how the exciters and a Millen No. 90811 high frequency power amplifier unit, share an 8¾ x 19-inch relay rack panel.

Both exciters have single channel oscillator circuits: the three-stage exciter for 28 and 50 megacycles occupies the lower portion of the plate; and the 144-megacycle four-stage exciter runs up the right side, and across the top. A 6360 twin pentode tube was used in the 144-megacycle tripler, instead of the two 6CL6 tubes shown in Fig. 3.

The under-chassis view (right) shows the constructional details and principal differences between this exciter and the packaged exciters built in *Miniboxes* (Figs. 6 and 9): A barrier terminal strip for the power and 300-ohm twinlead RF output connections; rotary tap switch to transfer power from one exciter to the other (S_2 in Fig. 4); and insulated phone tip jacks (J_3, J_4 and J_5 instead of J_1 in Fig. 1) for plugging in a test meter to measure the grid current in each stage.

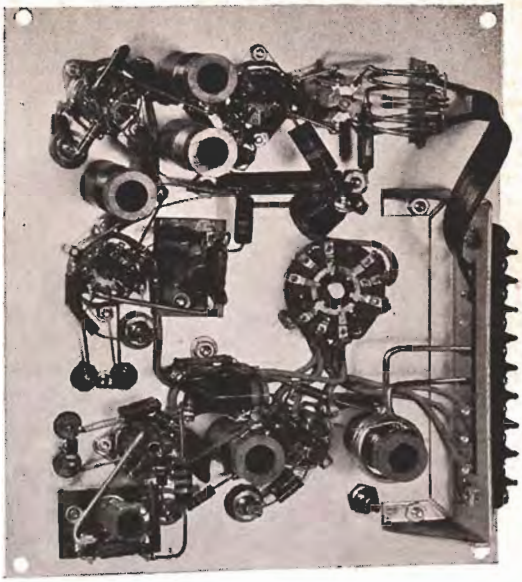

If you want further details on this model, send a postal card to me, and I'll mail a full-size chassis drilling diagram, and schematic diagram showing the exact circuit used, to you.

—*Lighthouse Larry*

Electronic TUBES

G-E HAM NEWS

Available FREE from

G-E Electronic Tube Distributors

Printed in U.S.A.

VOL. 13—NO. 3

published bi-monthly by

ELECTRONIC COMPONENTS DIVISION

GENERAL ELECTRIC

Schenectady 5, N. Y.

In Canada
CANADIAN GENERAL ELECTRIC CO., LTD.
189 Dufferin St., Toronto 3, Ontario

E. A. NEAL, W2JZK—EDITOR

MAY—JUNE, 1958

Form 3547 Requested

G-E Electronic TUBES

GENERAL ELECTRIC

G-E HAM NEWS

JULY–AUGUST, 1958

VOL. 13—NO. 4

SPECIAL DX LOG ISSUE

Revised July 15, 1958

STATE CHECK LIST

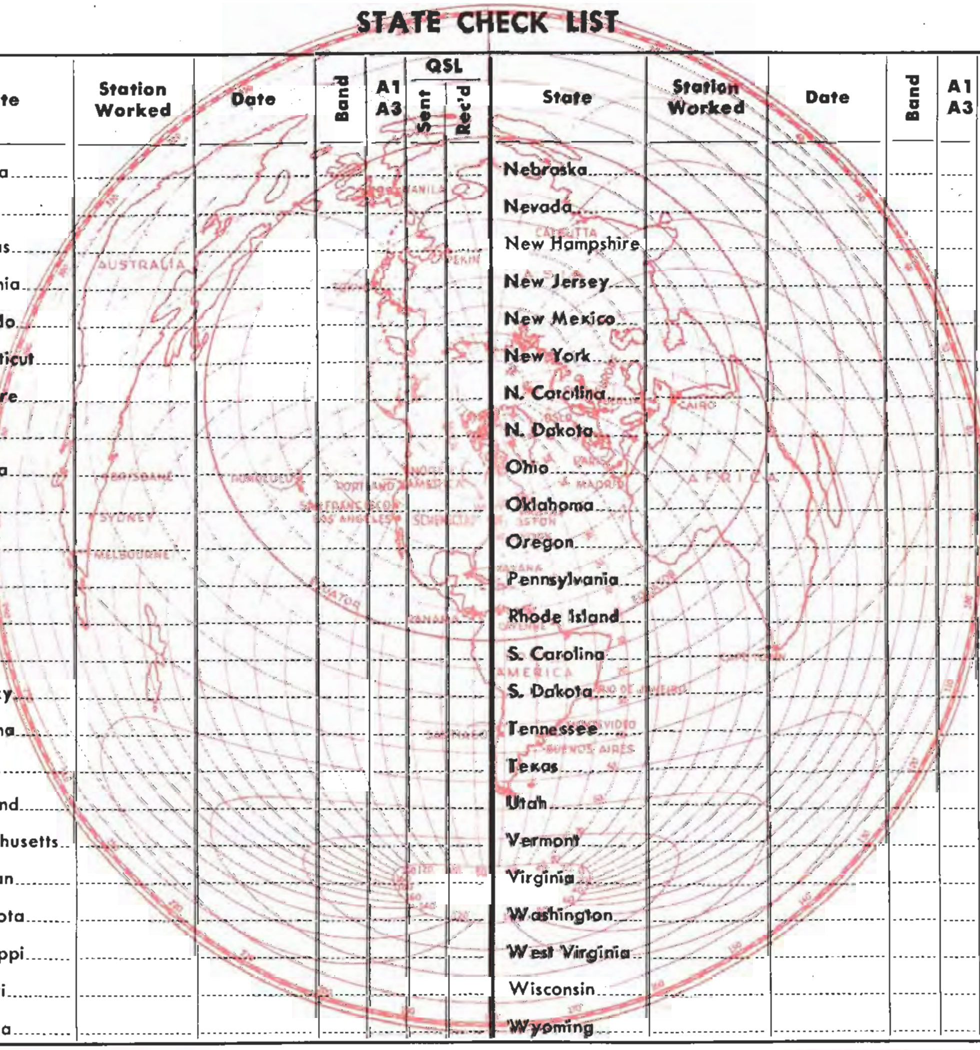

State	Station Worked	Date	Band	A1 A3	QSL		State	Station Worked	Date	Band	A1 A3	QSL	
					Sent	Rec'd						Sent	Rec'd
Alabama							Nebraska						
Arizona							Nevada						
Arkansas							New Hampshire						
California							New Jersey						
Colorado							New Mexico						
Connecticut							New York						
Delaware							N. Carolina						
Florida							N. Dakota						
Georgia							Ohio						
Idaho							Oklahoma						
Illinois							Oregon						
Indiana							Pennsylvania						
Iowa							Rhode Island						
Kansas							S. Carolina						
Kentucky							S. Dakota						
Louisiana							Tennessee						
Maine							Texas						
Maryland							Utah						
Massachusetts							Vermont						
Michigan							Virginia						
Minnesota							Washington						
Mississippi							West Virginia						
Missouri							Wisconsin						
Montana							Wyoming						

CONTENTS

OFFICIAL COUNTRIES

Prefix	Country	Continent	Station Worked	Date	Band	A1 A3	QSL	
							Sent	Rec'd
AC3	Sikkim	Asia						
AC4	Tibet	Asia						
AC5	Bhutan	Asia						
AP2	Pakistan	Asia						
BV, C3	Formosa	Asia						
C[1]	China	Asia						
C9	Manchuria	Asia						
CE	Chile	S. America						
CE9, KC4, LU-Z, VK0, VP8, ZL5, etc.	Antarctica	Africa, Oceania & S. America						
CE0	Easter Island	S. America						
CM, CO	Cuba	N. America						
CN2	Tangier Zone	Africa						
CN8	French Morocco	Africa						
CP	Bolivia	S. America						
CR4	Cape Verde Islands	Africa						
CR5	Portuguese Guinea	Africa						
CR5	Principe, Sao Thome	Africa						
CR6	Angola	Africa						
CR7	Mozambique	Africa						
CR8	Goa (Portuguese India)	Asia						
CR9	Macau	Asia						
CR10	Portuguese Timor	Oceania						
CT1	Portugal	Europe						
CT2	Azores Islands	Europe						
CT3	Madeira Islands	Africa						
CX	Uruguay	S. America						
DJ, DL, DM	Germany (incl. Saar[2])	Europe						
DU	Philippine Islands	Oceania						
EA	Spain	Europe						
EA6	Balearic Islands	Europe						
EA8	Canary Islands	Africa						
EA9	Ifni	Africa						
EA9	Rio de Oro	Africa						
EA9	Spanish Morocco	Africa						
EA0	Spanish Guinea	Africa						
EI	Republic of Ireland	Europe						
EL	Liberia	Africa						

OFFICIAL COUNTRIES

Prefix	Country	Continent	Station Worked	Date	Band	A1 A3	QSL	
							Sent	Rec'd
ET2	Eritrea	Africa						
ET3	Ethiapia	Africa						
F	France	Europe						
FA	Algeria	Africa						
FB8	Amsterdam & St. Paul Islands	Africa						
FB8[3]	Comoro Islands	Africa						
FB8	Kerguelen Islands	Africa						
FB8	Madagascar	Africa						
FB8[3]	Tromelin Island	Africa						
FC[1]	Corsica	Europe						
FD	Togo (French)	Africa						
FE8	French Cameroons	Africa						
FF8	French West Africa	Africa						
FG7	Guadeloupe	N. America						
FK8	New Caledonia	Oceania						
FL8	French Somaliland	Africa						
FM7	Martinique	N. America						
FO8	Clipperton Island	N. America						
FO8	French Oceania (e.g. Tahiti)	Oceania						
FP8	St. Pierre & Miquelon Islands	N. America						
FQ8	French Equatorial Africa	Africa						
FR7	Reunion Island	Africa						
FS7	Saint Martin	N. America						
FU8, YJ1	New Hebrides	Oceania						
FW8	Wallis & Futuna Islands	Oceania						
FY7	French Guiana & Inini	S. America						
G	England	Europe						
GC	Channel Islands	Europe						
GD	Isle of Man	Europe						
GI	Northern Ireland	Europe						
GM	Scotland	Europe						
GW	Wales	Europe						
HA	Hungory	Europe						
HB	Switzerland	Europe						
HC	Equador	S. America						
HC8	Galapagos Islands	S. America						
HE	Liechtenstein	Europe						
HH	Haiti	N. America						
HI	Dominican Republic	N. America						
HK	Colombia	S. America						

OFFICIAL COUNTRIES

Prefix	Country	Continent	Station Worked	Date	Band	A1 A3	QSL	
							Sent	Rec'd
HK0	Archipelago of San Andres & Providencia	S. America						
HL[4]	Korea	Asia						
HP	Panama	N. America						
HR	Honduras	N. America						
HS[4]	Thailand (Siam)	Asia						
HV	Vatican City	Europe						
HZ	Saudi Arabia (Hedjaz & Nejd)	Asia						
I1, IT1	Italy (incl. Trieste[5])	Europe						
I5	Italian Somaliland	Africa						
IS1	Sardinia	Europe						
JA[4], KA	Japan	Asia						
JT1	Mongolia	Asia						
JY	Jordan	Asia						
JZ0	Netherlands New Guinea	Oceania						
K, W	United States of America	N. America						
KA	(See JA)							
KA0, KG6I-	Bonin & Volcano Islands	Asia						
KB6	Baker, Canton, Howland & American Phoenix Island	Oceania						
KC4	(See CE9)							
KC4	Navassa Island	N. America						
KC6	Eastern Caroline Islands	Oceania						
KC6	Western Caroline Islands	Oceania						
KG1	(See OX)							
KG4	Guantanamo Bay	N. America						
KG6	Mariana Island	Oceania						
KG6I-	(See KA0)							
KH6	Hawaiian Islands	Oceania						
KJ6	Johnston Island	Oceania						
KL7	Alaska	N. America						
KM6	Midway Islands	Oceania						
KP4	Puerto Rico	N. America						
KP6	Palmyra Group, Jarvis Island	Oceania						
KR6	Ryukyu Islands (e.g. Okinawa)	Asia						
KS4	Swan Island	N. America						
KS6	American Samoa	Oceania						
KV4	Virgin Islands	N. America						
KW6	Wake Island	Oceania						
KX6	Marshall Islands	Oceania						

OFFICIAL COUNTRIES

Prefix	Country	Continent	Station Worked	Date	Band	A1 A3	QSL	
							Sent	Rec'd
KZ5	Canal Zone	N. America						
LA	Jan Mayen	Europe						
LA	Norway	Europe						
LA	Svalbard (Spitzenberg)	Europe						
LU	Argentina	S. America						
LU-Z	(See CE9 and VP8, LU-Z)							
LX	Luxembourg	Europe						
LZ	Bulgaria	Europe						
M1	San Marino	Europe						
MP4	Bahrein Island	Asia						
MP4	Qatar	Asia						
MP4	Trucial Oman	Asia						
OA	Peru	S. America						
OD5[4]	Lebanon	Asia						
OE[4]	Austria	Europe						
OH	Finland	Europe						
OH0[3]	Aland Island	Europe						
OK	Czechloslovakia	Europe						
ON4	Belgium	Europe						
OQ5, 0	Belgian Congo	Africa						
OX, KG1	Greenland	N. America						
OY	Faeroes	Europe						
OZ	Denmark	Europe						
PA0, PI1	Netherlands	Europe						
PJ[4]	Netherlands West Indies	S. America						
PJ2M-	Sint Maarten	N. America						
PX	Andorra	Europe						
PY	Brazil	S. America						
PY0[3]	Fernando de Noronha	S. America						
PY0[3]	Trindade	S. America						
PZ1	Netherlands Guiana	S. America						
SL, SM	Sweden	Europe						
SP	Poland	Europe						
ST2	Sudan	Africa						
SU	Egypt	Africa						
SV	Crete	Europe						
SV	Dodecanese (e.g. Rhodes)	Europe						
SV	Greece	Europe						
TA	Turkey	Asia & Europe						
TF	Iceland	Europe						

OFFICIAL COUNTRIES

Prefix	Country	Continent	Station Worked	Date	Band	A1 A3	QSL	
							Sent	Rec'd
TG	Guatemala	N. America						
TI	Costa Rica	N. America						
TI9	Cocos Island	N. America						
UA1, 2, 3, 4, 6	European Russian Socialist Federated Soviet Republic	Europe						
UA1	Franz Josef Land	Europe						
UA9, 0	Asiatic Russian S.F.S.R.	Asia						
UA0	Wrangel Island	Asia						
UB5	Ukraine	Europe						
UC2	White Russian S.F.S.R.	Europe						
UD6	Azerbaijan	Asia						
UF6	Georgia	Asia						
UG6	Armenia	Asia						
UH8	Turkoman	Asia						
UI8	Uzbek	Asia						
UJ8	Tadzhik	Asia						
UL7	Kazakh	Asia						
UM8	Kirghiz	Asia						
UN1	Karelo-Finnish Republic	Europe						
UO5	Moldavia	Europe						
UP2	Lithuania	Europe						
UQ2	Latvia	Europe						
UR2	Estonia	Europe						
VE, VO[6]	Canada	N. America						
VK	Australia (incl. Tasmainia)	Oceania						
VK[3]	Lord Howe Island	Oceania						
VK9	Cocos Island	Oceania						
VK9[3]	Nauru Island	Oceania						
VK9	Norfolk Island	Oceania						
VK9	Papua Territory	Oceania						
VK9	Territory of New Guinea	Oceania						
VK0	(See CE9)							
VK0	Heard Island	Oceania						
VK0	Macquarie Island	Oceania						
VO[6]	(See VE)							
VP1	British Honduras	N. America						
VP2[7]	Anguilla	N. America						
VP2[7]	Antigua, Barbuda	N. America						
VP2[7]	British Virgin Is.	N. America						
VP2[8]	Dominica	N. America						

OFFICIAL COUNTRIES

Prefix	Country	Continent	Station Worked	Date	Band	A1 A3	QSL	
							Sent	Rec'd
VP2[8]	Grenada & Dependencies	N. America						
VP2[7]	Montserrat	N. America						
VP2[7]	St. Kitts, Nevis	N. America						
VP2[8]	St. Lucia	N. America						
VP2[8]	St. Vincent & Dependencies	N. America						
VP3	British Guiana	S. America						
VP4	Trinidad & Tobago	S. America						
VP5	Jamaica, Cayman[9] Is.	N. America						
VP5	Turks & Caicos Islands	N. America						
VP6	Barbados	N. America						
VP7	Bahama Islands	N. America						
VP8	(See CE9)							
VP8	Falkland Islands	S. America						
VP8, LU-Z	South Georgia	S. America						
VP8, LU-Z	South Orkney Islands	S. America						
VP8, LU-Z	South Sandwich Islands	S. America						
VP8, LU-Z	South Shetland Islands	S. America						
VP9	Bermuda Islands	N. America						
VQ1	Zanzibar	Africa						
VQ2	Northern Rhodesia	Africa						
VQ3	Tanganyika Territory	Africa						
VQ4	Kenya	Africa						
VQ5	Uganda	Africa						
VQ6	British Somaliland	Africa						
VQ8	Chagos Islands	Africa						
VQ8	Mauritius	Africa						
VQ8[8]	Rodriguez Island	Africa						
VQ9	Seychelles	Africa						
VR1	British Phoenix Islands	Oceania						
VR1	Gilbert & Ellice & Ocean Islands	Oceania						
VR2	Fiji Islands	Oceania						
VR3	Fanning & Christmas Is.	Oceania						
VR4	Solomon Islands	Oceania						
VR5	Tonga (Friendly) Islands	Oceania						
VR6	Pitcairn Island	Oceania						
VS1[10]	Singapore	Asia						
VS2	Malaya	Asia						
VS4	Sarawak	Oceania						
VS5	Brunei	Oceania						
VS6	Hong Kong	Asia						

OFFICIAL COUNTRIES

Prefix	Country	Continent	Station Worked	Date	Band	A1 A3	QSL	
							Sent	Rec'd
VS9	Aden & Socotra	Asia						
VS9	Maldive Islands	Asia						
VS9	Sultanate of Oman	Asia						
VU2	India	Asia						
VU4	Laccadive Islands	Asia						
VU5	Andaman & Nicobar Islands	Asia						
W	(See K)							
XE, XF	Mexico	N. America						
XE4[3]	Revilla Gigedo	N. America						
XW8[4, 11]	Laos	Asia						
XZ2	Burma	Asia						
YA	Afghanistan	Asia						
YI	Iraq	Asia						
YJ1	(See FU8)							
YK	Syria	Asia						
YN, YN0	Nicaragua, Corn Islands	N. America						
YO	Roumania	Europe						
YS	Salvador	N. America						
YU	Yugoslavia	Europe						
YV	Venezuela	S. America						
YV0[3]	Aves Island	S. America						
ZA	Albania	Europe						
ZB1	Malta	Europe						
ZB2	Gibraltar	Europe						
ZC3	Christmas Island	Oceania						
ZC4	Cyprus	Asia						
ZC5	British North Borneo	Oceania						
ZC6	Palestine	Asia						
ZD1	Sierra Leone	Africa						
ZD2	Nigeria	Africa						
ZD3	Gambia	Africa						
ZD6	Nyasaland	Africa						
ZD7	Saint Helena	Africa						
ZD8	Ascension Island	Africa						
ZD9	Tristan da Cunha & Gough Is.	Africa						
ZE	Southern Rhodesia	Africa						
ZK1	Cook Islands	Oceania						
ZK2	Niue	Oceania						
ZL[3]	Chatham Islands	Oceania						
ZL	Kermadec Islands	Oceania						

OFFICIAL COUNTRIES

Prefix	Country	Continent	Station Worked	Date	Band	A1 A3	QSL	
							Sent	Rec'd
ZL	New Zealand	Oceania						
ZL5	(See CE9)							
ZM6	British Samoa	Oceania						
ZM7	Tokelau (Union) Islands	Oceania						
ZP	Paraguay	S. America						
ZS1, 2, 4, 5, 6	Union of South Africa	Africa						
ZS2	Prince Edward & Marion Islands	Africa						
ZS3	Southwest Africa	Africa						
ZS7	Swaziland	Africa						
ZS8	Basutoland	Africa						
ZS9	Bechuanaland	Africa						
3A	Monaco	Europe						
3V8	Tunisia	Africa						
4S7	Ceylon	Asia						
4W1	Yemen	Asia						
4X4[12]	Israel	Asia						
5A	Libya	Africa						
9G1[13]	Ghana	Africa						
9K2	Kuwait	Asia						
	Aldabra Islands[14]	Africa						
	Nepal[14]	Asia						

CROSS INDEX

Aden, VS9
Afghanistan, YA
Aland Islands, OH0
Alaska, KL7
Albania, ZA
Aldabra Islands [14]
Algeria, FA
Amsterdam, FB8
Andaman Islands, VU5
Andorra, PX
Angola, CR6
Anguilla, VP2
Antarctica, CE9, KC4, LU-Z, VK0, VP8, ZL5, etc.
Antigua, VP2
Arabia, Saudi, HZ
Argentina, LU
Armenia, UG6
Ascension Island, ZD8
Asiatic R.S.F.S.R., UA9, 0
Australia, VK
Austria, OE
Aves Island, YV0
Azerbaijan, UD6
Azares Islands, CT2

Bahama Islands, VP7
Bahrein Island, MP4
Baker Island, KB6
Balearic Islands, EA6
Barbuda, VP2
Barbados, VP6
Basutoland, ZS8
Bechuanaland, ZD9
Belgian Congo, OQ5, 0
Belgium, ON4
Bermuda Islands, VP9
Bhutan, AC5
Bolivia, CP
Bonin Is., KA0, KG6I
Borneo, British North, ZC5
Brazil, PY
Brunei, VS5
Bulgaria, LZ
Burma, XZ2

Caicas Islands, VP5
Cameroons, French, FE8
Canada, VE, VO
Canal Zone, KZ5
Canary Islands, EA8
Cape Verde Islands, CR4
Caroline Is., Eastern, KC6
Caroline Is., Western, KC6
Cayman Islands, VP5
Ceylon, 4S7
Chagos Islands, VQ8
Channel Islands, GC
Chatham Islands, ZL
Chile, CE
China, C
Christmas Island, ZC3
Christmas & Fanning Is., VR3
Clipperton Island, FO8
Cocas Island, TI9
Cacos Islands, VK9
Colombia, HK
Comoro Island, FB8
Cook Islands, ZK1
Corn Islands, YN0
Carsica, FC
Costa Rica, TI
Crete, SV
Cuba, CM, CO
Cyprus, ZC4
Czechaslovakia, OK

Denmark, OZ
Dodecanese, SV
Dominica, VP2
Dominican Republic, HI

Easter Is., CE0
Egypt, SU
Ellice Islands, VR1
England, G
Equador, HC
Eritrea, ET2
Estonia, UR2
Ethiopia, ET3
European R.S.F.S.R., UA1, 2, 3, 4, 6

Faeroes, OY
Falkland Islands, VP8
Fernando de Noronha, PY0
Fiji Islands, VR2
Finland, OH
Formosa, BV, C3
France, F
Franz Joseph Land, UA1
French Equatorial Africa, FQ8
French Oceania, FO8
French West Africa, FF8
Friendly Islands, VR5
Futuna Island, FW8

Galapagos Islands, HC8
Gambia, ZD3
Georgia, UF6
Germany, DJ, DL, DM
Ghana, 9G1
Gibraltar, ZB2
Gilbert Islands, VR1
Goa (Portugese India), CR8
Gough Island, ZD9
Greece, SV
Greenland, OX, KG1
Grenada & Dependencies, VP2
Guadeloupe, FG7
Guantanamo Boy, KG4
Guatemala, TG
Guiana, British, VP3
Guiana, French, FY7
Guiana, Netherlands, PZ1
Guinea, Portugese, CR5
Guinea, Spanish, EA0

Haiti, HH
Hawaiian Islands, KH6
Heard Island, VK0
Hedjaz, HZ
Honduras, HR
Honduras, British, VP1
Hong Kong, VS6
Howland Island, KB6
Hungary, HA

Iceland, TF
Ifni, EA9
India, VU2
Inini, FY7
Iraq, YI
Ireland, Northern, GI
Ireland, Rep. of, EI
Isle of Man, GD
Israel, 4X4
Italy, I1, IT1

Jamaica, VP5
Jan Mayen, LA
Japan, JA, KA
Jarvis Is., KP6
Johnston Island, KJ6
Jordan, JY

Karelo-Finnish Rep., UN1
Kazakh, UL7
Kenya, VQ4
Kerguelen Islands, FB8
Kermadec Island, ZL
Kirghiz, UM8
Korea, HL
Kuwait, 9K2

Laccadive Islands, VU4
Laos, XW8
Latvia, UQ2
Lebanon, OD5
Liberia, EL
Libya, 5A
Liechtenstein, HE
Lithuania, UP2
Lord Howe Island, VK
Luxembourg, LX

Macau, CR9
Macquarie Island, VK0
Madagascar, FB8
Madeira Islands, CT3
Malaya, VS2
Maldive Islands, VS9
Malta, ZB1
Manchuria, C9
Mariana Islands, KG6
Marion Island, ZS2
Marshall Islands, KX6
Martinique, FM7

CROSS INDEX (cont'd)

Mauritius, VQ8
Mexico, XE, XF
Midway Islands, KM6
Miquelon Island, FP8
Moldavia, UO5
Monaco, 3A
Mongolia, JT1
Montserrat, VP2
Morocco, French, CN8
Morocco, Spanish, EA9
Mozambique, CR7

Nauru, VK9
Navassa Island, KC4
Nejd, HZ
Nepal[14]
Netherlands, PA0, PI1
Netherlands West Indies, PJ
Nevis, VP2
New Caledonia, FK8
New Guinea, Netherlands, JZ0
New Guinea Terr., VK9
New Hebrides, FU8, YJ1
New Zealand, ZL
Nicaragua, YN
Nicobar Islands, VU5
Nigeria, ZD2
Niue, ZK2
Norfolk Island, VK9
Norway, LA
Nyasaland, ZD6

Ocean Islands, VR1
Okinawa, KR6
Oman, Sultanate of, VS9
Oman, Trucial, MP4

Pakistan, AP2
Palestine, ZC6
Palmyra Group, KP6
Panama, HP
Papua Territory, VK9
Paraguay, ZP
Peru, OA
Philippine Islands, DU
Phoenix Island, American, KB6
Phoenix Islands, British, VR1
Pitcairn Island, VR6
Poland, SP
Portugal, CT1
Portugese India, CR8
Prince Edward Island, ZS2
Principe Islands, CR5
Puerto Rico, KP4

Qatar, MP4

Reunion Island, FR7
Revilla Gigedo, XE4
Rhodes, SV
Rhodesia, Northern, VQ2
Rhodesia, Southern, ZE
Rio de Oro, EA9
Rodriguez Island, VQ8
Roumania, YO
Russian S.F.S.R. (Asiatic), UA9, UA0
Russian S.F.S.R. (European), UA1, 2, 3, 4, 6
Ryukyu Is., KR6

St. Helena, ZD7
St. Kitts, VP2
St. Lucia, VP2
St. Martin, FS7
St. Paul Islands, FB8
St. Pierre Island, FP8
St. Vincent & Dependencies, VP2
Salvador, YS
Samoa, America, KS6
Samoa, British, ZM6
San Andres & Providencia, Archipelago of, HK0
San Marino, M1
Sao Thome, CR5
Sarawak, VS4
Sardinia, IS1
Saudi Arabia, HZ
Scotland, GM
Seychelles, VQ9
Siam, HS
Sierra Leone, ZD1
Sikkim, AC3
Singapore, VS1
Sint Maarten, PJ2M-
Socotra, VS9
Solomon Islands, VR4
Somaliland, British, VQ6
Somaliland, French, FL8
Somaliland, Italian, I5
South Africa, Union of, ZS1, 2, 4, 5, 6
South Georgia Is., VP8, LU-Z
South Orkney Is., VP8, LU-Z
South Sandwich Is., VP8, LU-Z
South Shetland Is., VP8, LU-Z
Southwest Africa, ZS3
Spain, EA
Spitzbergen, LA
Sudan, ST
Svalbard, LA
Swan Island, KS4
Swaziland, ZS7
Sweden, SL, SM
Switzerland, HB
Syria, YK

Tadzhik, UJ8
Tahiti, FO8
Tanganyika Terr., VQ3
Tangier Zone, CN2
Tasmania, VK7
Thailand, HS
Tibet, AC4
Timor, Portugese, CR10
Tobago, VP4
Togo, French, FD
Tokelau Islands, ZM7
Tonga Islands, VR5
Trieste, I1
Trindade, PY0
Trinidad, VP4
Tristan da Cunha, ZD9
Tromelin Island, FB8
Trucial Oman, MP4
Tunsia, 3V8
Turkey, TA
Turkoman, UH8
Turks Islands, VP5

Uganda, VQ5
Ukraine, UB5
Union Islands, ZM7
Union of South Africa, ZS1, 2, 4, 5, 6
United States, K, W
Uruguay, CX
Uzbek, UI8

Vatican City, HV
Venezuela, YV
Virgin Islands, KV4
Virgin Is., British, VP2
Volcano Islands, KA0, KG6I

Wake Island, KW6
Wales, GW
Wallis Islands, FW8
White Russian, S.F.S.R., UC2
Wrangel Islands, UA0

Yemen, 4W1
Yugoslavia, YU

Zanzibar, VQ1

BANNED COUNTRIES[4]

International Telecommunications Union agreements provide that "radiocommunications between amateur stations of different countries shall be forbidden if the administration of one of the countries concerned has notified that it objects to such radiocommunications."

Since several governments have thus notified the ITU, the Federal Communications Commission has issued a public notice on December 21, 1950 which forbids United States radio amateurs from communicating with amateurs in these countries. Any confirmations dated during these restricted periods will not be accepted for DXCC credit by the ARRL.

Check the "DXCC Notes" column in the "Operating News" section of *QST* magazine each month for the latest information on these BANNED COUNTRIES.

The following listing shows these countries with which communications by amateur radio have been banned for certain periods. These countries *currently* are *not on the banned list* and thus appear in the OFFICIAL COUNTRIES listing elsewhere in this issue. Confirmations for eligible periods should be recorded there.

Prefix	**Country**	**Period Country Was On Banned List**
HL	Korea	June 1, 1953 to October 18, 1957.
HS	Thailand (Siam)	December 21, 1950 to September 1, 1955.
JA	Japan (Nationals Only)	December 21, 1950 to October 15, 1952.
OD5	Lebanon	December 21, 1950 to October 15, 1952.
OE	Austria (Nationals Only)	December 21, 1950 to April 1, 1954.
PJ	Netherlands West Indies	December 21, 1950 to March 11, 1952.
XW8[11]	Laos	December 21, 1950 to July 20, 1955.

The following tabulation with red background indicates those countries on the banned list as of July 15, 1958. Only confirmations from these countries dated prior to December 21, 1950, will be accepted for DXCC credit. Confirmations dated during the eligible period may be listed below.

Prefix	**Country**	**Continent**	**Station Worked**	**Date**	**Band**	**A1 A3**	**QSL**	
							Sent	**Rec'd**
EQ	Iran	Asia						
PK1, 2, 3	Java	Oceania						
PK4	Sumatra	Oceania						
PK5	Netherlands Borneo	Oceania						
PK6	Celebes & Molucca Is.	Oceania						
3W8[11]	Cambodia	Asia						
3W8[11]	Viet Nam	Asia						

DELETED COUNTRIES

The countries listed below have appeared on ARRL Official Countries Lists for certain periods since November 15, 1945. Confirmations from these countries dated in accordance with instructions in FOOTNOTES will be recognized for DXCC credit.

Prefix	Country	Continent	Station Worked	Date	Band	A1 A3	QSL Sent	QSL Rec'd
FI8[11]	French Indo-China	Asia						
FN[15]	French India	Asia						
I1[5]	Trieste	Europe						
VO[6]	Labrador, Newfoundland	N. America						
VP5[9]	Cayman Islands	N. America						
ZD4[13]	Gold Coast (Togoland)	Africa						
9S4[2]	Saar	Europe						
	Tannu Tuva[14, 16]	Asia						

FOOTNOTES

(1) This prefix is listed as "unofficial" in *ARRL Countries List*, but it is recognized for DXCC credit.

(2) Confirmations from Saar, dated after November 8, 1947, and prior to April 1, 1957, count as separate country for DXCC credit; list under DELETED COUNTRIES. Subsequent confirmations count as credit for Germany.

(3) New listing as separate country (since last *G-E HAM NEWS* DX LOG was published) for confirmations dated on or after November 15, 1945.

(4) Communications between radio amateurs in these countries, and United States amateurs, were banned for certain periods; see BANNED COUNTRIES listing for details.

(5) Confirmations from Trieste, dated prior to April 1, 1957, count as separate country for DXCC credit; list under DELETED COUNTRIES. Subsequent confirmations count as DXCC credit for Italy.

(6) Confirmations from Newfoundland and Labrador, dated prior to April 1, 1949, count as separate country for DXCC credit; list under DELETED COUNTRIES. Subsequent confirmations count as credit for Canada.

(7) Confirmations from any of these islands, dated prior to June 1, 1958, count as DXCC credit for Leeward Islands. However, if such credit already has been given, no further credit as a separate country can be given for that particular island.

(8) Confirmations from any of these islands, dated prior to June 1, 1958, may be counted as DXCC credit for Windward Islands. However, if such credit already has been given, no further credit as a separate country can be given for that particular island.

(9) Confirmations from Cayman Islands, dated prior to June 1, 1958, count as separate country for DXCC credit; list under DELETED COUNTRIES. Subsequent confirmations count as credit for Jamaica.

(10) Confirmations from Singapore, dated on or after April 1, 1946, count as separate country for DXCC credit.

(11) Confirmations from Laos, dated on or after July 20, 1955, count as separate country for DXCC credit; previously counted as part of French Indo-China (F18), listed in DELETED COUNTRIES. French Indo-China was placed on banned list as of December 21, 1950, and subsequent dated confirmations do not count as credit for DXCC. French Indo-China also divided into Cambodia (3W8) and Viet Nam (3W8) as of July 20, 1955, as separate countries. No DXCC credit given at present; see listing in BANNED COUNTRIES.

(12) Confirmations from Israel, dated on or after May 14, 1948, count as separate country for DXCC credit.

(13) Confirmations from Ghana, dated on or after March 5, 1957, count as DXCC credit for Ghana. Confirmations dated prior to that date count as DXCC credit for Gold Coast (Togoland). See ZD4 in DELETED COUNTRIES listing.

(14) Country has no regularly assigned prefix.

(15) Confirmations from French India dated prior to November 1, 1954, count as separate country for DXCC credit; French India became part of India (VU2) on that date.

(16) Tannu Tuva removed from *ARRL Countries List* as of August 1, 1955.

CONTINENT CHECK LIST

Continent	Prefix	Country	Station Worked	Date	Band	A1 A3	QSL Sent	QSL Rec'd
Africa								
Asia								
Europe								
N. America								
Oceania								
S. America								

ZONE CHECK LIST

Zone	Station Worked	Date	Band	A1 A3	QSL	
					Sent	Rec'd
1						
2						
3						
4						
5						
6						
7						
8						
9						
10						
11						
12						
13						
14						
15						
16						
17						
18						
19						
20						
21						
22						
23						
24						
25						
26						
27						
28						
29						
30						
31						
32						
33						
34						
35						
36						
37						
38						
39						
40						

Electronic
TUBES

Printed in U.S.A.

G-E HAM NEWS

*Available **FREE** from*
G-E Electronic Tube Distributors

VOL. 13—NO. 4

published bi-monthly by
ELECTRONIC COMPONENTS DIVISION
GENERAL ELECTRIC
Schenectady 5, N. Y.
In Canada
CANADIAN GENERAL ELECTRIC CO., LTD.
189 Dufferin St., Toronto 3, Ontario

E. A. NEAL, W2JZK—EDITOR

JULY-AUGUST, 1958

HAM NEWS

SEPTEMBER-OCTOBER, 1958

Featuring—

GADGET RACK

For your shack

PROBLEM . . . How best to house the many accessory units in the average amateur radio station.

SOLUTION . . . Place each unit on a narrow strip panel, house them all in one large cabinet—and call it the GADGET RACK!

THE GADGET RACK offers a partial—but important—solution to arranging accessories in the amateur station for maximum operating convenience and best appearance. Although specific cabinet and accessory dimensions are illustrated, the idea can be applied to any convenient and available material.

A station that has been in operation for several years usually has the following accessories:

1. keying monitor
2. frequency standard
3. conelrad receiver
4. selective audio system
5. outboard IF system
6. intercom set
7. modulation monitor

If these units have been accumulated on a one-at-a-time basis, they probably comprise a collection of miscellaneous size boxes and chassis—some with power supplies and some that obtain their power from the receiver—all of them interconnected with unsightly dangling wires.

One solution to the problem is to construct the above units on one large chassis with its own power supply. This produces a unit which lacks flexi-

Continued on page 3

CONTENTS

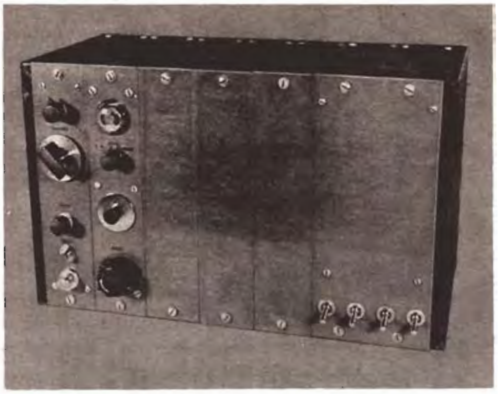

TABLE MODEL GADGET RACK, and accessories ready for action at W9GFS. Left to right: COMBO MONITOR, CONEL MONITOR, blank panels, and power supply.

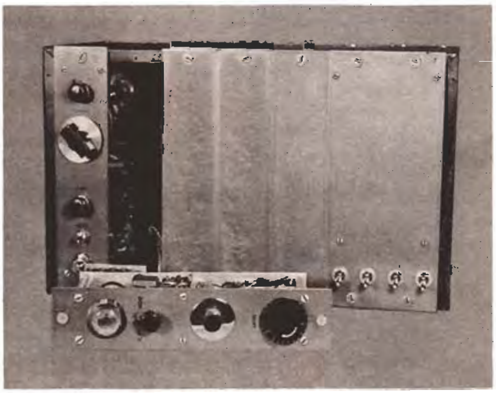

GADGET RACK with COMBO MONITOR removed to illustrate ease of access to units.

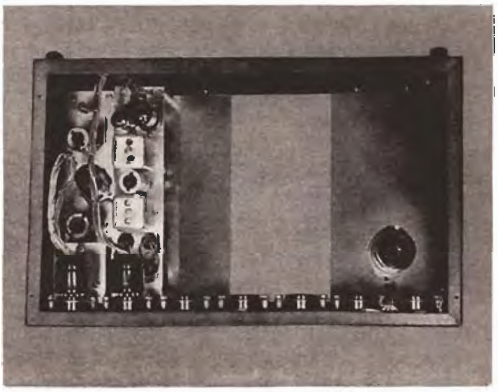

INSIDE VIEW of GADGET RACK with rear cover removed.

SCANNING the SPECTRUM

***SURPRISE!** A new format for G-E HAM NEWS begins with this issue, including—clean, fresh mastheads and titles—in the text, a larger type size with greater spacing between lines—and even a new printing process—surely you've noticed by now!*

We didn't announce the change ahead of time, but ye olde editor hopes you'll be pleased with the increased array of build-it-yourself data—witness the GADGET RACK and accessories herein.

1958 EDISON AWARD

For the seventh consecutive year, General Electric is sponsoring the Edison Radio Amateur Award for outstanding public service.

A U.S. RADIO AMATEUR who has distinguished himself through noteworthy public service will receive the Edison Award trophy and a check for $500 at a public ceremony in Washington, D. C., early next year.

ONLY CANDIDATES nominated by letter from any individual, club or association can be considered by the judges. Full details of the public service rendered, as well as the candidate's name, complete address and amateur call letters, should be included in a letter postmarked not later than January 5, 1959.

BASIS FOR JUDGING will be (1) the greatest benefit to an individual or group, and (2) the amount of ingenuity and sacrifice displayed in performing the service. A panel of distinguished and impartial judges will review all entries.

JUDGES WILL BE:

E. ROLAND HARRIMAN, Chairman, The American National Red Cross.

ROSEL H. HYDE, Commissioner, Federal Communications Commission.

GOODWIN L. DOSLAND, President, American Radio Relay League.

WINNER OF THE AWARD will be announced on or before Thomas A. Edison's birthday, February 11, 1959.

EMPLOYEES of the General Electric Company may nominate candidates for the Edison Radio Amateur Award, but are not permitted to receive the Award.

FOR YOUR ELECTRONICS BOOKSHELF . . .

While we're talking about publications, three new booklets on amateur radio, and an operating aid for DX'ers, are now available.

G-E TRANSISTOR MANUAL—A revised and expanded *third* edition of this most-used book in the transistor field; 168 pages stuffed with semiconductor theory, applications, circuitry and specifications. A plastic binding allows the book to lie flat when open, just like our equally famous Essential Characteristics tube handbook.

See for yourself when you pick up your copy ($1.00) from your local G-E Tube distributor, or directly from G.E.'s Semiconductor Products Department, Section S-5898, Electronics Park, Syracuse, N. Y.

SINGLE SIDEBAND FOR THE RADIO AMATEUR—Published by the American Radio Relay League, has blossomed out in a new revised and enlarged second edition. This 250-plus page handbook covers the history, theory and practical aspects of single sideband—generation, detection, modulation, linear amplifiers—and related station accessories. It's an indispensable—repeat, indispensable—reference to keep you well informed on sideband techniques for only $1.50 in the United States, $1.75 elsewhere.

A BRAND-NEW BOOK—CQ–YL, by Louisa B. Sando, W5RZJ, tells an amazing tale of the YL's contribution to the history of amateur radio, from 1913 to date. Louisa, in announcing the book, says it is profusely illustrated—more than 500 photographs—and that it can be ordered directly from her ($3.50, postpaid) at 212 Sombrio Drive, Santa Fe, New Mexico. She'll personally autograph your copy if you request it.

RME DX COMPUTER—A handy, slide-rule type operating aid and DX guide for radio amateurs. Just announced by Electro-Voice, the device lists the following items for each call letter prefix: Country, continent, zone, time differential, international postal rates, and great circle bearing for beam antenna headings.

The call letter prefix column has extra spaces to fill in your own QSL records, sent and received. The DX COMPUTER, measuring about 13 x 5 inches over-all, is available from most electronic parts distributors for $1.00, amateur net.

HOW TO GET *G-E HAM NEWS*—It's free of charge from your G-E Tube distributor. A subscription plan at $1 per year is available to persons with mail addresses in the United States, Alaska, Hawaii, Panama Canal Zone, or APO and FPO numbers. Write to the address on the back page.

Subscriptions in Canada—at $1 per year—are available from the Canadian General Electric Co., Ltd., Electronic Tube Marketing Section, 189 Dufferin St., Toronto 3, Ont.

In other countries, ***G-E HAM NEWS*** may be obtained through International General Electric distributors and representatives.

—*Lighthouse Larry*

PARTS LIST

NOTE: All capacitances are in mmf, 500 volts working, all resistances in ohms, ½ watt, unless otherwise specified.

F_1.....3-ampere fuse and holder, type 3AG or 8AG.
I_1.......miniature pilot lamp bracket.
J_1....2-prong female, recessed chassis power connector.
J_2 to J_8....11-pin phenolic octal sockets (Amphenol type 78-RS11).
L_1.....10 henry filter choke, 100 to 150 ma rating.
P_1, P_2......male 11-pin phenolic octal plugs (Amphenol 86-PM11).
S_1 to S_4.....single pole, single throw toggle switches.
T_1....power transformer, 600 volts, center tapped, 100 to 150 ma; 6.3 volt, 4-ampere and 5 volt, 3 ampere heater windings; 115 volt, 60-cycle primary.

CABLE SIZES:

"A"...No. 16 stranded insulated wire.
"B"...No. 20 stranded insulated wire.
"C"...No. 18 stranded shielded wire.

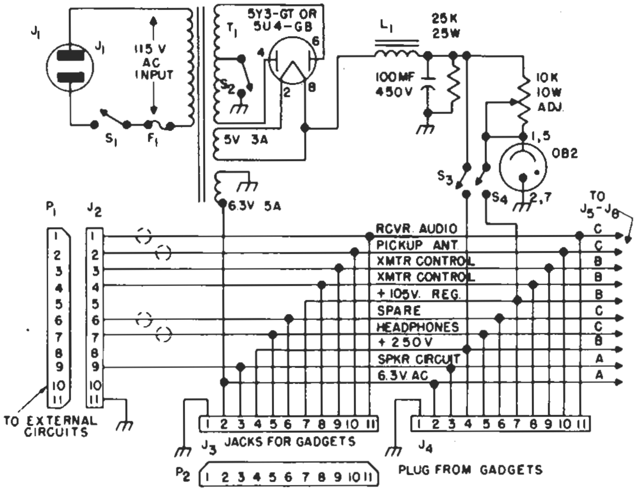

FIG. 1. SCHEMATIC DIAGRAM showing the bus-bar system of interconnections for power and signal circuits between accessory units in the GADGET RACK. The circuit for a suggested power supply also is included.

GADGET RACK

Continued from page 1

bility. If one is foresighted and includes everything he will ever want—or if radio magazines ever stop printing descriptions of desirable auxiliary units—this combined unit will prove satisfactory.

Try to add another unit and there is seldom sufficient chassis room. Mechanical work on the chassis is difficult to do without damaging components and wiring previously installed. And, finally, the unit will probably be unusable for a period dependent upon the time one has to devote to construction.

As a better solution, the author decided to consider a large accessory unit with built-in flexibility by virtue of interchangeable unit construction. This, of course, is not a new idea, as a number of manufacturers produce specialized chassis which may be used in this fashion.

The first step was to list the requirements for a satisfactory system, namely:

(1) basic enclosure easily obtainable;
(2) construction using hand tools;
(3) two or more enclosures stackable without affecting accessibility of individual units;
(4) individual units readily removable for adjustment or repair;
(5) interconnection made between units with a minimum of effort;
(6) unit positions interchangeable without disturbing the interconnections;
(7) remove units removable from the enclosure for repair or adjustment, but still connected to the system;
(8) units removable from the front of the enclosure without access to the rear.

The first requirement ruled out the use of any case or box obtained as surplus equipment, for availability at a given time or place or in the future is always doubtful. The enclosure finally selected was the 7″ x 9″ x 15″ crackle-finished still box with removable covers—shown in the views on page 1—produced by several chassis manufacturers. This enclosure is inexpensive and lends itself to stacking if the removable covers are used as the front and back of the unit.

(Editor's note: Any convenient and available cabinet will serve as the GADGET RACK, if it will house your accessories. A GADGET RACK designed for mounting in a standard relay rack—and a different table cabinet model—will be described in the next issue of ***G-E HAM NEWS***.)

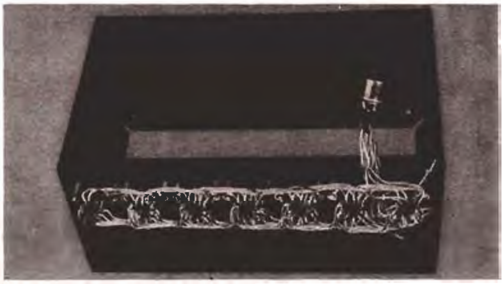

FIG. 2. ACCESSORY SOCKETS were first fastened to the outside of the cabinet bottom, wired and then mounted inside the box. Cut metal spacers to length that allows lugs on sockets to clear metal box.

THE INTERCONNECTION PROBLEM among the accessory units, external circuits and power supply was solved with a *bus-bar* system. After listing all the required connections—and allowing for a spare or two—11-pin octal plugs and sockets were selected. Several sockets, J5-J8 wired according to the schematic diagram, Fig. 1, were mounted along the bottom rear corner of the cabinet. The Assembly Procedure is outlined under the view of these sockets, Fig. 2. Still another 11-pin socket, J2, mounted in any convenient location inside or outside the cabinet, is used for external connections.

External connections on each accessory unit are brought out through a short cable terminating in an 11-pin octal plug (P_2), as shown in Fig. 3. Thus, a unit at any location in the enclosure can connect to the power and other external circuits simply by soldering cable wires into the proper plug pins. If more bus-bar connections are required, other connectors having more pins may be substituted (Amphenol, Cannon, Jones, Elco Varicon, etc.).

SEVERAL TYPES OF CHASSIS may be used for the individual units, but the models described in this issue utilize plate-and-post chassis. Dimensions of a typical chassis are shown in Fig. 4. If a unit requires shielding, strips of perforated aluminum sheet may be cut to fit the side openings and fastened to the corner posts.

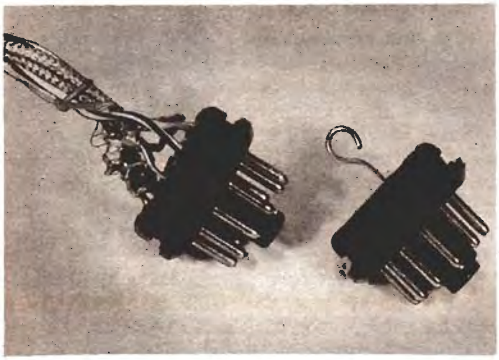

FIG. 3. CONNECTION PLUG for accessory units. Loop made from tinned wire, soldered into pin 1, provides chassis connection for outer conductor of shielded wires in cable.

Corner posts may be cut from aluminum or brass rod, whatever is available. Round rod should be ⅜ of an inch in diameter; square rod, ⅜ of an inch on a side.

Panel widths were cut in multiples of one-half of an inch. Corresponding rear chassis plates were cut one-quarter of an inch narrower to provide clearance between adjacent units when installed in the rack. Although the plates can be cut with a hacksaw (or tinshears if they do not bend the panel), better appearance will result if all the plates can be sheared at a local sheet metal shop. An assortment of panels and chassis can be cut at one time to anticipate future needs; next month's *QST* or *CQ* may carry a story on a gadget that you must have in your station.

Other gadget chassis may be made from utility boxes, ***Miniboxes, Channel-lock*** boxes, small open end chassis—even a flat aluminum plate fastened to the panel with a strip of aluminum angle stock—whatever fits the requirements of the unit to be constructed.

Commercially made gadgets also can be incorporated into a GADGET RACK. Either drill a rack panel to match the controls, or cut a hole in the panel so that the front of the unit can be seen. Small angle brackets will help support a gadget mounted in this manner.

Gadget rack construction possibilities are limited only by your imagination. Even a metal bread box might make a good enclosure!

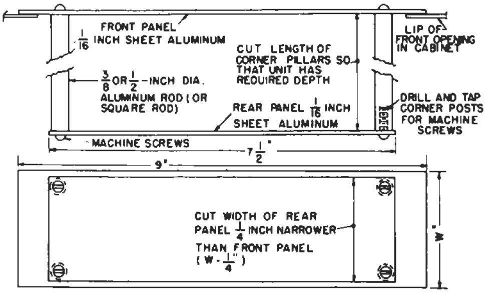

FIG. 4. BASIC PLATE-AND-POST CHASSIS for accessory units. COMBO MONITOR and CONEL MONITOR use this type chassis.

COMBO MONITOR

THE FIRST GADGET RACK ACCESSORY is a combination keying monitor, modulation indicator and field strength measuring instrument.

CONTINUOUSLY CHECKING your transmitter signal—and your *fist* too—is easy with this versatile unit. It requires only three tubes and two germanium diodes. A plate and post chassis, shown in the side view, Fig. 1, automatically provides a thru-panel mounting for the 6E5 indicator *eye* tube.

The signal to be monitored is fed into the unit from an external pickup antenna on pin 10 of the interconnecting cable system, as shown in the schematic diagram, Fig. 2. A 100-ohm potentiometer adjusts the signal level applied to the 6BE6 mixer tube. The position of the function switch, S_1, determines the operation of the remaining circuits, as follows:

CW—An NE-51 neon lamp relaxation oscillator generates an audio tone which is mixed with the RF signal from the transmitter. This produces a modulated RF signal in the 6BE6 plate circuit, tuned to the transmitter frequency.

After detection by a 1N34 diode, the resulting audio signal is amplified in the left-hand 12AX7 triode and appears in the headphone circuit (pin 5 of the bus-bar system). Signals from the station receiver, applied on pin 11, are also fed into the headphone circuit by the right-hand 12AX7 triode. However, whenever the transmitter key is pressed, rectified RF voltage from the 1N34 is applied to this stage as a negative bias, disabling it.

Thus, receiver audio is present in the headphone circuit when the key is *up*, and the NE-51 audio tone is heard when the key is *down*. This function is similar to the popular *Monitone* circuit[1].

CARRIER LEVEL—In this position of S_1, an RF signal from the transmitter results in application of negative bias from the 1N34 to the grid of the 6E5 *eye* tube. This causes the unlighted portion of the circular fluorescent target on the end of the 6E5 to narrow or close entirely, indicating relative carrier level.

MODULATION—In this position of S_1, modulation on a transmitter signal, detected by the 1N34 diode, appears in the headphone circuit. This audio signal also is rectified by a second 1N34 (located between S_1 and the 6E5 in Fig. 2), applied as a negative bias on the 6E5 grid and causes the *eye* to close in accordance with the modulation on the transmitter signal.

THE MODEL SHOWN was constructed on a 2½-inch-wide panel and a 2¼-inch-wide chassis plate. Parts locations on the chassis layout diagram, Fig. 3, are not critical and may be changed to suit available components. Good construction practice—short leads, isolation of signal and AC power circuits, related components grouped together, etc.—should be followed, however.

Continued on page 8

FIG. 1. SIDE VIEW of the COMBO MONITOR unit. Corner posts connecting the panel and chassis are 3 inches long. Those for the 2 x 2¼-inch mounting plate for the 1-megohm potentiometer are 1½ inches long. All posts are tapped for 6–32 screws at both ends.

COIL TABLE—COMBO MONITOR

All coils wound with No. 24 enameled wire on 1-inch diameter, 4-prong coil forms (Millen, No. 45004; ICA, No. 1108B). On 3.5- and 7-megacycle coils, L_2 is wound over the pin-2 end of L_1, with a layer of plastic insulating tape between. On 14-, 21- and 28-megacycle coils, L_2 is wound next to pin-2 end of L_1.

BAND (MC)	L_1 uh	L_1 turns	L_1 length	L_2 turns	C_1 (mmf)
3.5	42	52 (closewound)	1⅛″	16	4—50
7	13	24 (closewound)	½″	12	4—50
14	7	16 (closewound)	⅜″	8	3—12
21	3.6	12 (spaced wire dia.)	⅝″	6	3—12
28	2	7 (spaced wire dia.)	⅜″	4	3—12

PARTS LIST

C_1....Midget mica-insulated trimmer capacitors connected across L_1 in each coil; see COIL TABLE for values.

C_2....100-mmf mica (Or, 75 to 150 mmf, see text, page 8).

NE-51....1/25th-watt neon glow lamp; requires miniature bayonet socket.

P_1....Male 11-pin octal plug (Amphenol 86-PM11).

S_1....2-circuit, 3-position, single section, non-shorting tap switch (Mallory 3223J).

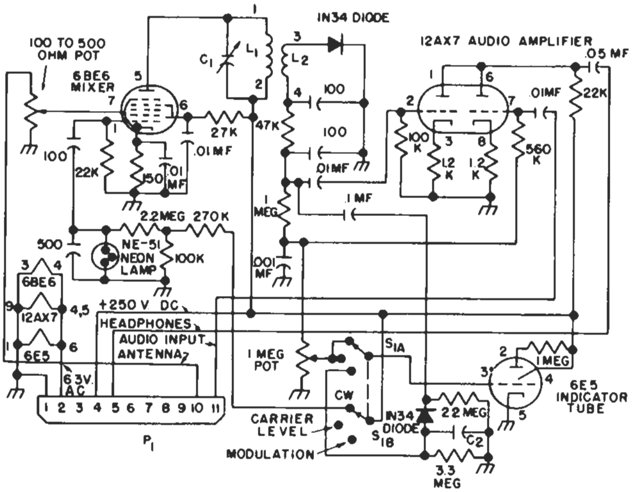

FIG. 2. COMPLETE SCHEMATIC DIAGRAM for the COMBO MONITOR. Chassis grounds in the model were made at the points indicated. All capacitances are in mmf; all resistors ½-watt composition, unless otherwise specified.

CONEL MONITOR

SOLVE YOUR CONELRAD MONITORING PROBLEMS with this combination Conelrad receiver and WWV Converter accessory unit.

Makeshift Conelrad monitoring arrangements have no place in the modern amateur radio station. The simplest circuits are usually blocked or triggered by your own transmitter and thus are not reliable.

It's easy to build this dual-purpose unit from old broadcast receiver parts. Or, insert our alarm and WWV converter circuits into a receiver you may now be using as a Conelrad monitor and have the following features:

1. Self-contained; no external receiver required.
2. Sufficiently selective to prevent blocking from nearby transmitters.
3. Little external antenna required.
4. Tunable over entire broadcast band.
5. Has sufficient audio output for speaker reception, when needed.
6. Monitors signal from WWV to check frequency standards, clocks, etc.

THE BASIC RECEIVER CIRCUIT, shown in the schematic diagram, Fig. 1, is a conventional AC-powered superheterodyne up to the audio section. With S_1 in the *CONELRAD* position, local broadcast band signals from a short antenna on pin 10 of the bus-bar system are applied to the 6BE6 mixer (upper left-hand corner of Fig. 1) through L_1 and L_2—C_{1A}. If this circuit is tuned to 1000 kilocycles, for instance, the local oscillator circuit, L_3—C_{1B}, will be tuned to 1455 kilocycles.

Transformers T_1 and T_2 are peaked at 455 kilocycles and permit the 6BA6 to amplify this frequency, the difference between 1455 and 1000 kilocycles. Modulation on the 455-kilocycle signal is demodulated in a 1N34 diode. The diode also rectifies the RF signal, developing a negative bias (AVC voltage) which is applied to the control grid of the 6BA6, controlling its amplification in inverse proportion to the signal level.

The bias also holds a 2D21 miniature Thyratron tube nonconducting whenever the station signal is present. When the signal is interrupted (as it would be in a Conelrad alert), the 2D21 conducts. This causes the NE-51 neon lamp, I_1, to light, giving visual indication of the signal interruption.

The cathode circuit of the 6CX8 (triode section) first audio amplifier is also completed when the 2D21 conducts. This permits audio to be heard in the headphone and speaker circuits, including miscellaneous noises, or, the modulation on the broadcast signal when it reappears. Open S_2 to mute the audio system and turn off I_1.

THE WWV CONVERTER section of the receiver (lower left-hand corner of Fig. 1) is activated by turning S_1 to the *WWV* position. The 10-megacycle signal from *WWV* is fed from the pickup antenna through L_4 and L_5 to the signal grid of a second 6BE6 mixer. The crystal oscillator, operating at 8.5 megacycles, beats with the 10-megacycle signal and produces a 1.5-megacycle difference signal at the plate of the 6BE6. The WWV signal will be heard with the Conelrad receiver tuned to 1.5 megacycles.

A PLATE-AND-POST CHASSIS was also used for the Conel Monitor model shown in the side view, Fig. 2, and in the GADGET RACK on page 1. A panel width of at least 3 inches is recommended[1], but this will depend upon the sizes of the components actually used in constructing the unit.

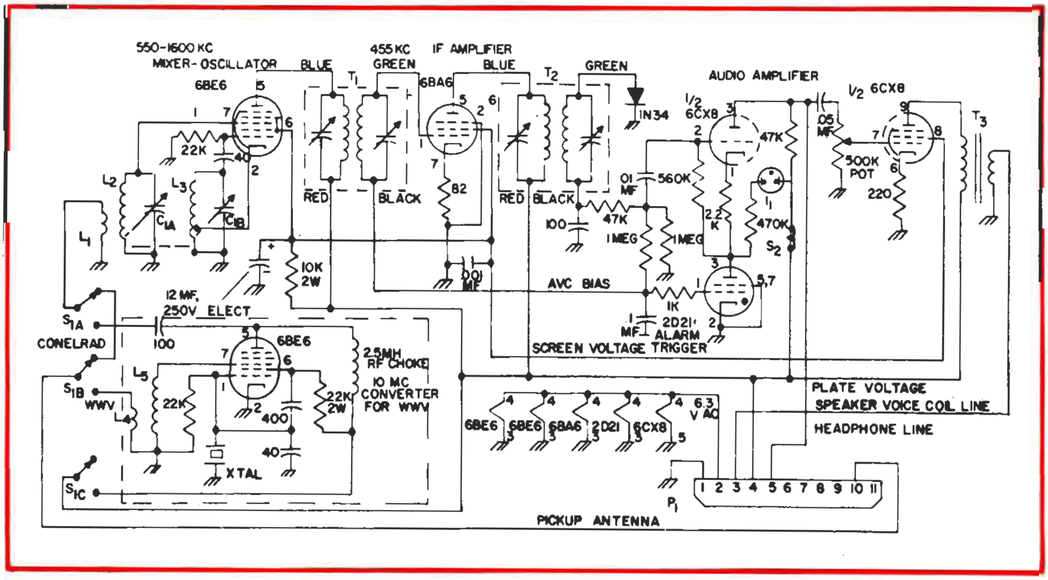

FIG. 1. COMPLETE SCHEMATIC DIAGRAM of the combination Conelrad monitor and WWV converter. The latter circuit, enclosed within dotted lines, can be eliminated or incorporated into an existing receiver. All capacitances are in mmf; all resistances ½ watt, unless otherwise specified.

When planning the over-all size of your monitoring unit, first lay out the larger components, including tubes, at the approximate positions indicated in the layout sketch, Fig. 3. If T_1 and T_2 are 1⅜ inches square or larger, move them close together near one edge of the chassis and shift the 6BA6 off center next to them. If the 6BE6 converter tube will not be included, the 6BE6 Conelrad mixer tube can be placed in the center of the chassis.

Signal carrying leads in the 6BE6 and 6BA6 stages should be cut as short as possible. Generous use of terminal strips provides tie points for junctions between wires and the smaller components. Most small parts and wiring around the tube sockets should be assembled before the chassis plate is fastened to the panel. Leads running to controls on the panel can be cut to length by holding the panel in position temporarily while measuring them. Lengths of No. 22 hookup wire and No. 18 shielded single conductor wire were used for the interconnecting cable.

ALIGNING THE CONEL MONITOR follows the standard procedure for any superhet receiver. First apply power and check for heater and plate voltages in each stage. If the 6BE6 oscillator section is working, a local broadcast signal should be located when tuning C_1. Adjust the trimmer capacitors (or tuning slugs) in T_2 and T_1, in that order, for maximum signal.

Next, adjust the small trimmer capacitor on C_{1B} (not shown on the schematic diagram) so that the receiver will tune from about 550 to 1600 kilocycles. Locate a weak signal near 1400 kilocycles and adjust the trimmer on C_{1A} for maximum signal. Recheck the adjustments in T_1 and T_2 for maximum signal. A signal generator can be used for alignment instead of broadcast signals.

CONEL MONITOR PARTS LIST

C_1 . . . . Two-section broadcast receiver variable; C_{1A}, 10–365 mmf; C_{1B}, 8–130 mmf.
I_1 . . . . NE-51 neon lamp.
L_1, L_2 . . . . broadcast receiver antenna coil.
L_3 . . . . broadcast receiver oscillator coil, with cathode tap, for 455-kilocycle IF.
L_4 . . . . 10 turns, No. 28 enameled wire over chassis-connected end of L_5.
L_5 . . . . 16 uh, 44 turns, No. 28 enameled wire, closewound 11/16 of an inch long on ½-inch diameter iron slug tuned coil form (National XR-50 or equivalent).
P_1 . . . . male 11-pin octal plug (Amphenol 86-PM11 or equivalent).
S_1 . . . . 3-pole, 2-position, single section rotary tap switch (Mallory No. 3223J).
S_2 . . . . 1-pole, normally closed push-button switch.
T_1, T_2 . . . . 455-kilocycle IF transformers.
T_3 . . . . Universal output transformer, tube to speaker voice coil.
XTAL . . . . quartz crystal, 8.5 megacycles.

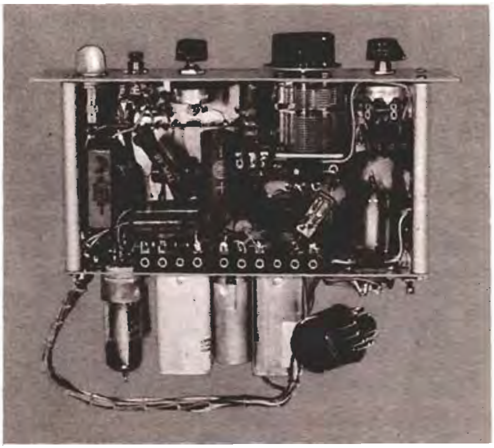

FIG. 2. SIDE VIEW of the Conelrad monitor unit. Locations of principal components have been marked. The corner posts are 4 inches long, made from 1⅜-inch diameter aluminum rod, threaded at both ends.

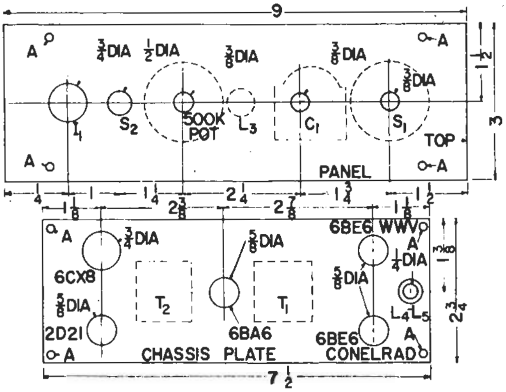

FIG. 3. PANEL AND CHASSIS parts layout for the Conelrad monitor. The IF transformers on this model are 1⅛ inches square. The 6BE6 mixer tube for the Conelrad receiver can be centered on the chassis plate if the 6BE6 WWV converter tube and L_4—L_5 will not be included in the unit.

ALIGNING THE WWV CONVERTER is very simple. Turn S_1 to the *WWV* position, tune the Conelrad receiver around 1.5 megacycles and the characteristic signal from WWV should be heard[2]. Adjust the tuning slug in L_5 for maximum signal. It should be possible to hear a number of short wave broadcast signals in the 9.5–10-megacycle range by tuning the Conelrad receiver between 1.0 and 1.5 megacycles.

---

[1] Sharp-eyed readers probably have noted that a narrower panel—only 2 inches wide—appears on the model on page 1. However, the author heartily recommends the 3-inch panel width. The layout sketch, Fig. 3, was drawn for this size of panel.

[2] See the "Measuring Equipment" chapter, *The Radio Amateur's Handbook* (ARRL), for a detailed description of the coded signals broadcast over WWV.

COMBO MONITOR

Continued from page 5

ADJUSTMENT IS SIMPLE, once all circuits in the COMBO MONITOR are working properly. Plug in a coil for the band on which the transmitter is operating before applying power to the unit. Modulate the transmitter 100 percent (check this with an oscilloscope, borrowed or otherwise), turn S_1 to *MODULATION* and adjust the 100-ohm signal lever potentiometer until the 6E5 *eye* barely closes.

Remove the modulation from the transmitter, turn S_1 to *CARRIER LEVEL*, and adjust the 1-megohm potentiometer so that the 6E5 *eye* just closes, but does not overlap. The monitor is now calibrated to indicate 100-percent amplitude modulation of a transmitter. The 1-megohm potentiometer can now be locked in position.

Each time the monitor is used on a different band, simply turn S_1 to *CARRIER LEVEL* and adjust the 100-ohm signal level control so that the 6E5 *eye* barely closes. Then return S_1 to the *MODULATION* position and the monitor is ready for use on a modulated signal.

[1] J. W. Paddon, "The Monitone," September, 1948, *QST*, page 22; also C. V. Chambers, "The Monitone—Model 1951B," May, 1951, *QST*, page 29.

SEPTEMBER—OCTOBER, 1958
VOL. 13—NO. 5

Available FREE from your G-E Tube Distributor

HAM NEWS

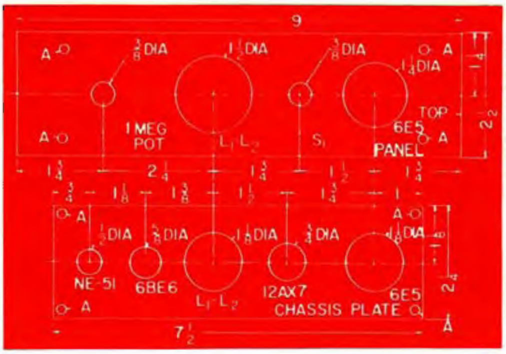

FIG. 3. PANEL AND CHASSIS PARTS LAYOUT used for this model. Small holes for socket and terminal strip hardware are not shown and should be located from those parts.

E. A. Neal, W2JZK—Editor

published bi-monthly by

ELECTRONIC COMPONENTS DIVISION
GENERAL ELECTRIC
Schenectady 5, N. Y.

HAM NEWS

NOVEMBER–DECEMBER 1958

In This Issue . . .

more

GADGET RACK

Ideas . . . . . . page 3

Also—

Accessories in GADGET RACK above are (left to right): (1) Power control panel; (2) CHANNEL SPOTTER Calibrator; (3) CONEL MONITOR; (4) COMBO MONITOR Deluxe 1; (5) VOX-O-MATIC Voice Controlled break-in unit 1; (6) AUDIO PREAMP/LIMITER/PATCH; and (7) Signal input panel. Also in view—and coming in future issues—HAM-SCOPE-MARK II, High-C Bandswitching VFO, 200-watt double sideband transmitter and plug-in Signal Slicer inside HRO-60 receiver.

Have a rack-mounted station? This GADGET RACK model, designed for relay-rack mounting —plus another table model and two handy accessories—continues the GADGET RACK series which began in the September–October, 1958 issue.

—Lighthouse Larry

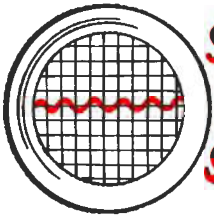

SCANNING the SPECTRUM

MEET THE DESIGNERS . . .

K2PQF/4—Robert V. Kinney, designed the CHANNEL SPOTTER calibrator and AUDIO PREAMPLIFIER/LIMITER/-PATCH described elsewhere in this issue. Bob puts these gadgets—and a few other accessories in his gadget box—through their paces while operating his station on the phone amateur phone bands.

The K2PQF/4 call sign indicates the recent transfer of Bob's department, the General Electric Communication Products Department's national headquarters, to Lynchburg, Va. from Syracuse, N. Y. He serves as national military communication sales manager for that operation, maker of our fine *Progress Line* of mobile two-way radio equipment.

* * *

W9GFS—Phillip E. Hatfield, constructed the clever GADGET RACK table model, COMBO MONITOR and CONEL MONITOR in the September–October, 1958 issue of *G-E HAM NEWS*, thus solving his station accessory problems. He also devised the relay rack type frame in this issue.

As you may surmise, Phil is an experienced constructor of his own equipment. His two mobile stations—entirely home-built, including complete receivers—incorporate innovations proven in more than twenty-five years of mobile hamming!

Vocationally, W9GFS is a technical data engineer with General Electric's Receiving Tube Department in Owensboro, Ky. So when Phil devotes a weekend to designing another gadget for his station, he's another of the thousands of radio hams who literally enjoy a "busman's holiday."

new G-E SERVICE DESIGNED receiving tubes

High-reliability techniques—long famous in the production of General Electric's Five-Star and Computer tubes for critical applications—have been extended to include the most-used tube types in television and radio receivers. Thus, the expanded G-E SERVICE DESIGNED tube line now has many tube types found in amateur radio gear.

The principal improvements are:

(1) "Snow-White" manufacturing processes to minimize short circuits between tube elements.

(2) A new accelerated heater cycling test to insure proper tube performance under wide variations in line voltage.

(3) A new G-E developed method of testing for shorts and opens.

(4) Building entertainment class tubes to meet life tests twice as rigid as Joint-Army-Navy specifications.

(5) A new method of applying uniform insulation coating on heater wire.

(6) Extending stiff military-type glass strain specifications to all SERVICE DESIGNED receiving tubes.

(7) Development of new materials, including a new anode permitting greater heat dissipation and longer life.

Many other improvements are being made on individual tube types.

Ask for the G-E SERVICE DESIGNED tubes listed below for when you need replacements for the tubes in your amateur gear.

1B3-GT
1H2
1J3
1K3
1X2-B
2AF4-A
2CY5
3BN6
3BU8
3BZ6
3CB6
3DT6
4BN6
4BU8
4BZ6
5AQ5
5BK7-A
5CG8
5CL8-A
5EA8
5EU8
5U4-GB
5U8
5V3/5AU4
5Y3-GT
6AF4
6AF4-A
6AL5
6AQ5-A
6AU4-GTA
6AU6-A
6AX4-GT
6BK7-B
6BN6
6BQ6-GA
6BQ7-A
6BU8
6BZ6
6BZ7
6CB6-A
6CD6-GA
6CG7
6CG8-A
6CL8-A
6CX8
6CY5
6DN7
6DQ6-A
6DT6
6EA8
6EU8
6EW6
6J6
6SN7-GTB
6T8-A
6U8-A
6V6-GT
7EY6
8CG7
8CX8
12AT7
12AU7-A
12AX4-GTA
12BY7-A
12BQ6-GA
12DQ6-A
12SN7-GTA
17AX4-GT
17DQ6-A
19AU4-GTA

more GADGET RACK Ideas

A GADGET RACK frame—made from easily-worked aluminum angle and sheet—can be fitted into practically any type of relay rack or cabinet. The model shown is 8¾ inches high, but could be any multiple of 1¾ inches in height.

THE AVAILABILITY of aluminum angle stock in most hardware stores is a boon to the home constructor of radio equipment. A surprisingly strong GADGET RACK frame was fabricated from angle ¾ x ¾ of an inch in size with a ⅛-inch-thick wall (Reynolds No. 7)—using ordinary hand tools. It shows no sign of sagging even with several pounds of power supply fastened to the rear panel.

Most constructional details show in the front and rear views of our model on this page. The assembly sketch, FIG. 1, illustrates how the pieces in the upper front corner joints overlap. The critical dimensions are marked on this diagram. Note that angle having 1-inch sides must be used if the minimum width between the relay rack uprights is between 17¼ and 17¾ inches.

Length of the side pieces will be dependent on the depth of the rack cabinet and the amount the power supply unit extends behind the frame.

FLAT-HEAD MACHINE SCREWS should be used to assemble all joints. Countersink all screw heads flush with the metal surface in order to clear the relay rack side rails.

The rear panel—8½ x 17¼ x 1/16 of an inch thick on this model—is fastened to the frame with small angle brackets cut from the aluminum angle stock. Holes were punched in this panel for the row of accessory interconnection sockets. The sockets were then wired according to the schematic diagram (FIG. 1, page 3) in the last issue and connections were made to the power supply unit before it was fastened in place. Circuit for the power supply also is identical.

THE POWER SUPPLY was constructed on a 1/16-inch-thick aluminum plate 4 x 15 inches in size. Corner posts of ⅜-inch square brass rod 3 inches long drilled and tapped at both ends, fasten the plate onto the rear panel. Side and end plates were cut from 1/16-inch-thick aluminum sheet, but perforated sheet or screening will provide more ventilation. Construction details are shown in the view on page 4.

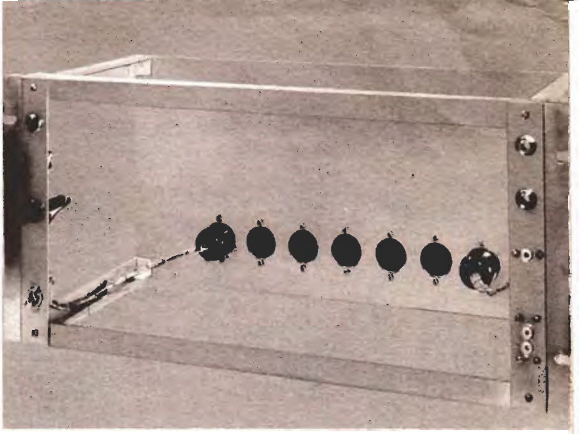

RACK MODEL of the GADGET RACK with most accessories removed. Socket at left on rear panel has eight contacts for power control panel; other sockets have eleven contacts for interconnection system between accessories. Signal input panel plugs into socket at right.

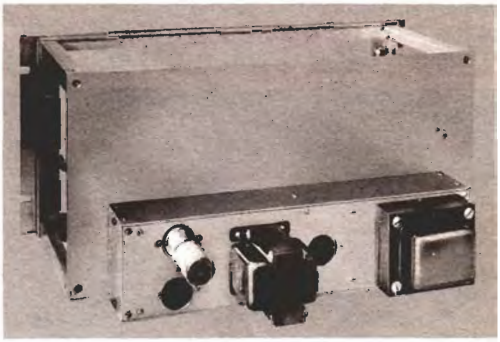

REAR VIEW of rack model, showing power supply fastened to rear panel. Socket between transformer and choke is for 5U4-GB rectifier. Power socket for external accessories is located below filter capacitor.

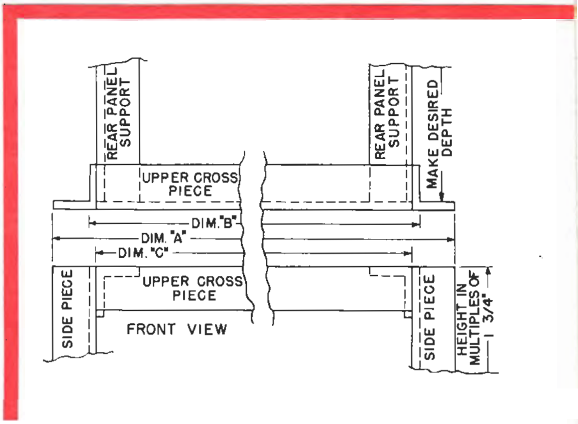

FIG. 1. SKETCH showing assembly of angles for sides, top and bottom, and rear panel supports. Table below gives dimensions.

Size of aluminum angle	1"	¾"
Dim. "A"—over-all width	19"	19"
Dim. "B"—rack clearance	17¼"	17¾"
Dim. "C"—panel space	17"	17½"

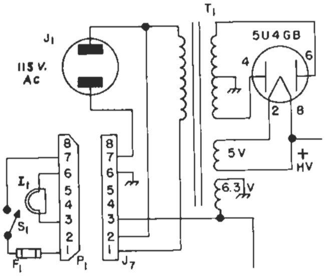

FIG. 2. SCHEMATIC DIAGRAM for power control unit and octal socket in power supply. See FIG. 1 (page 3) of the September–October 1958 issue for parts values, except for P_1 and J_7.

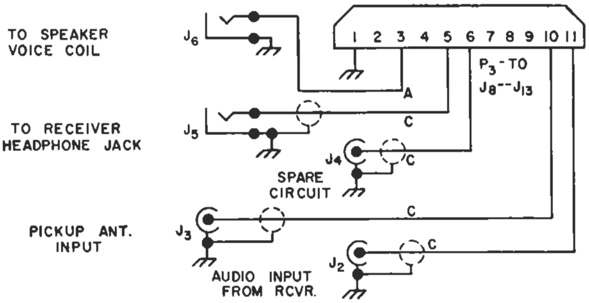

FIG. 3. SCHEMATIC DIAGRAM for signal input panel shown in front view, FIG. 1. Connectors J_2, J_3 and J_4 are phonograph jacks; J_5 and J_6 are standard open circuit phone jacks. Or, use jacks which match type of plugs already used in your station.

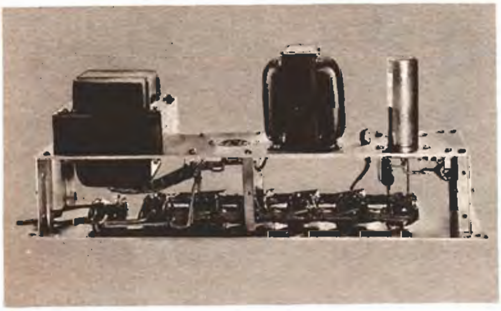

POWER SUPPLY constructed on plate-and-post type chassis 4 x 5 x 13 inches in size. Bus-bar interconnection sockets were fastened to separate plate and wired before assembly.

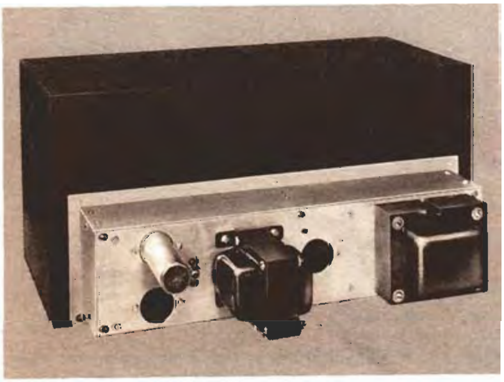

REAR VIEW of a table cabinet model GADGET RACK with power supply fastened to rear wall. Slot across rear of cabinet provides access to interconnection sockets from inside cabinet.

Of course, the power supply may be assembled with the components on the top deck, instead of extending rearward. A conventional chassis of similar proportions could then be used, with the accessory sockets mounted along the side wall facing forward. Other practical chassis are *Miniboxes*, or *Seezak* chassis plates and side rails.

THE CABINET GADGET RACK is adaptable to the rear-mounted power supply; the model below having been constructed to show this. Most utility cabinets have a slot about 2½ inches high extending across the rear wall. Thus, it is a simple matter to mount the accessory sockets on a plate large enough to overlap this opening by ¾ of an inch on all sides and fasten the power supply to it. The bottom surface of the power supply should be flush with the cabinet bottom or feet; otherwise the weight of the power supply may cause the cabinet to "rear up" when it is devoid of accessories.

In both the cabinet and relay rack models, accessories may be held in place with self-tapping screws driven into small holes drilled in the flanges above and below the front opening. Or, these holes may be drilled and tapped for machine screws. The latter method is preferable in the aluminum angle.

Our models will serve as a guide to planning a GADGET RACK tailored to your particular requirements. Conceivably, a unitized transmitter, receiver, or group of converters for the VHF bands could be assembled. But why say more; you may already have your GADGET RACK under construction!

CHANNEL SPOTTER

100/20-kilocycle calibrator

THE CHANNEL SPOTTER *not only provides frequency markers at 100-kilocycle intervals, but equally important sub-markers every 20 kilocycles.*

THE IMPORTANCE of having a 100-kilocycle frequency standard around the amateur station is well recognized. It's almost a necessity to identify edges of the amateur bands, and subdivisions in the bands, on your receiver, to avoid out-of-band operation of your transmitter.

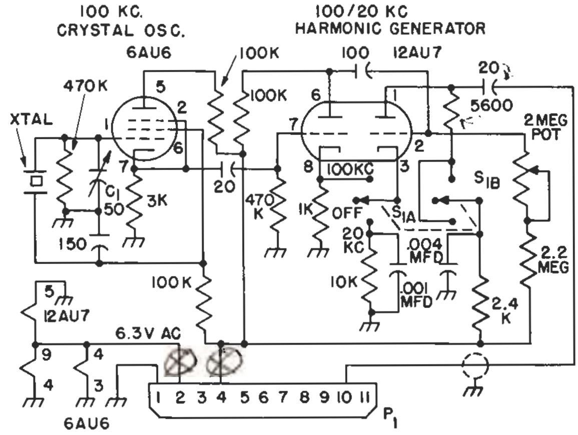

FIG. 1. SCHEMATIC DIAGRAM of the **CHANNEL SPOTTER** calibrator. Pin 4 on P_1 is for plate voltage; pin 10 is the monitoring antenna. All resistors are ½ watt; capacitors are in mmf unless otherwise specified. Other parts values are: C_1—50-mmf air trimmer, APC type; P_1—11-pin male octal plug (Amphenol 86-PM11); S_1—2-pole, 3-position, single section rotary tap switch (Mallory 3223J); XTAL—100-kilocycle quartz standard frequency crystal.

Having additional frequency markers available at 20-kilocycle intervals, however, is handy for spotting frequencies for message handling and other prearranged schedules, local rag-chewing channels, and innumerable other uses. A specific frequency can be found within a kilocycle or two by interpolation, even on receivers having bandspread dials calibrated only from 0 to 100; or only every 50 or 100 kilocycles.

THE CIRCUIT, shown in the schematic diagram, FIG. 1, has only two tubes. A 6AU6 pentode functions as a 100-kilocycle crystal oscillator. Output from the cathode circuit drives one section of a 12AT7 twin triode, operating in a frequency divider circuit.

This circuit is similar to a multivibrator in that 100-kilocycle signals in the left-hand triode are amplified and applied to the grid of the right-hand triode. When S_1 is in the *20-KC* position, a 10,000-ohm cathode resistance biases this section of the tube near cutoff plate current. An increasing positive bias, applied through the 2.2-megohm resistor and 2-megohm potentiometer, permits both sections of the tube to operate as a multivibrator. When the potentiometer is properly adjusted, the multivibrator produces one cycle of oscillation for every five 100-kilocycle oscillations and so divides this frequency by five. The output signal is applied to the antenna circuit of the GADGET RACK bus-bar system through pin 10 on P_1.

When S_1 is switched to the *100-KC* position, the 12AT7 becomes a simple amplifier for the 100-kilocycle signal. This stage is disabled in the OFF position of S_1, and very little signal feeds through from the oscillator.

CONSTRUCTION is quite simple; either a plate-and-post type chassis, or a *Minibox* drilled as illustrated in the parts layout diagram, FIG. 2, may be used. Locations of components are not critical, but should be generally similar to the diagram. All wiring can be insulated hookup wire, except the output signal lead running to pin 10 on P_1; this should be shielded wire. Make the connecting cable whatever length is necessary to reach the proper accessory socket in the GADGET RACK.

continued on page 7

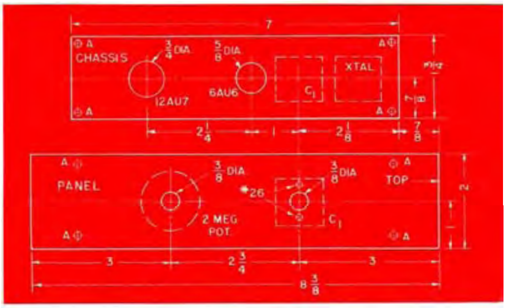

FIG. 2. PANEL AND CHASSIS LAYOUT diagram for the **CHANNEL SPOTTER**. Holes marked "A" are No. 26 drill for corner posts on plate-and-post chassis. The crystal mounting will depend upon the type of holder.

AUDIO PREAMPLIFIER/LIMITER/PATCH

NEED MORE AUDIO GAIN in your transmitter? If so, try this versatile unit which combines a preamplifier, level limiter and handy phone patch into a single package.

SOME TRANSMITTERS just don't have enough audio amplification to provide a highly readable phone signal under today's crowded amateur band conditions. This unit overcomes these problems with a tube lineup selected for desired characteristics in each circuit. In addition, a phone patch for all-important public service work is built in.

THE SCHEMATIC DIAGRAM, FIG. 1, shows a high-impedance microphone input at J_1, coupled to the left-hand section of a 12AX7 twin triode. This tube has been designed to have a very low hum level. The output of this preamplifier drives a 6BA6 remote-cutoff pentode in the limiter. A second 6BA6 pentode is the automatic gain control tube. Negative bias for controlling the gain of the limiter stage is obtained by further amplifying the output signal in a 12AT7 twin triode and applying it to a 6AL5 twin diode. The bias is developed across the 1-megohm resistor and filtered by the .25-mfd capacitor shown just to the left of this tube.

This bias is applied to the number 3 grids of the 6BA6's and the right-hand section of the 12AX7. This triode works as a DC amplifier and the variations in plate current cause the 0–1 DC milliammeter in series with the cathode to indicate the relative amount of compression.

The phone patch circuit utilizes a three-winding transformer from the vertical oscillator of a television receiver. The telephone line connects to the medium-impedance winding, the 6BA6 limiter to the highest-impedance winding, and the speaker voice coil circuit to the lowest-impedance winding. In position "1" of S_1, the patch circuit and telephone line are not connected. In position "2," the patch operated only in one direction; it feeds the telephone signal into the amplifier. In position "3," the circuit operates as a two-way patch, also feeding the signal from the speaker circuit back to the telephone line.

CONSTRUCTION practice for this unit is pretty much the same as for the previous GADGET RACK accessories. The recommended layout for a plate-and-post type chassis is shown in FIG. 2. The unit also could be built on a 4 x 6 x 3-inch aluminum chassis with a panel 4¼ inches wide.

The only critical components are the phone patch transformer, T_1, which should be kept away from power transformers to minimize

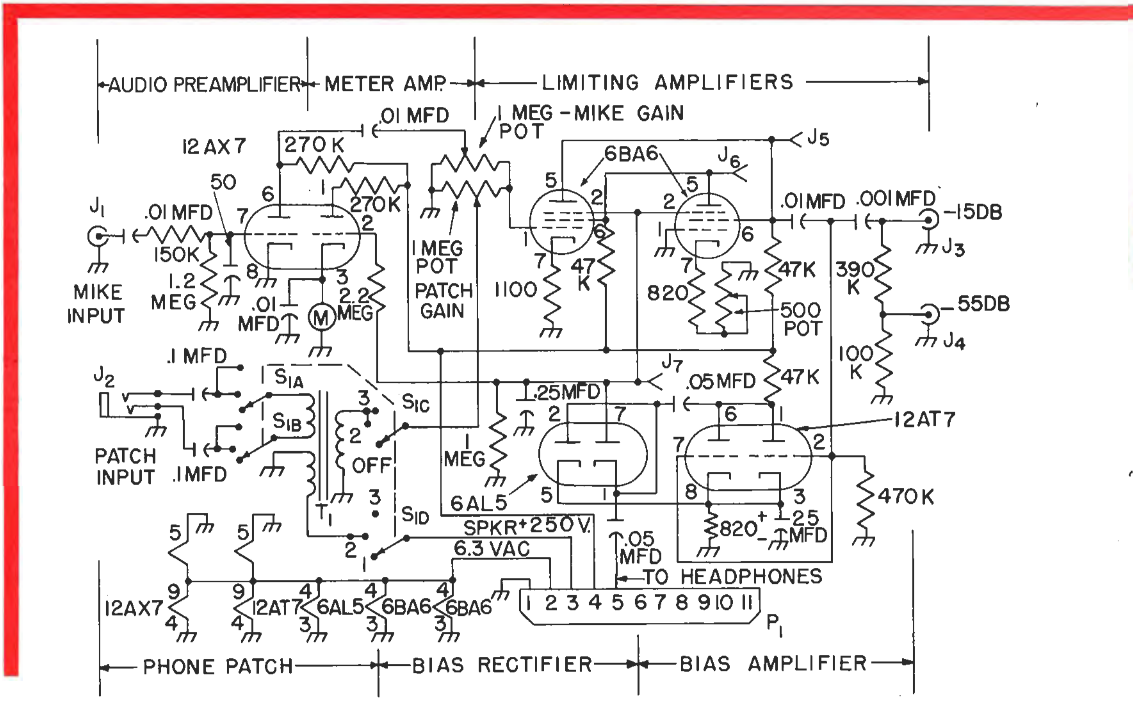

CHANNEL SPOTTER

continued from page 5

THE TUNEUP is simply a matter of applying heater power to check that circuit, and, if okay, applying plate voltage. Turn S_1 to the *100-KC* position and check for signals at multiples of 100 kilocycles on a broadcast band receiver. A broadcasting station on one of these frequencies will serve as a standard for adjusting the oscillator to precisely 100 kilocycles by turning C_1. Or, tune 100-KC position and check for signals at in the 5-megacycle signal from *WWV* and adjust C_1 until the fiftieth harmonic from the 100-kilocycle oscillator coincides with it.

Next, turn S_1 to the *20-KC* position and adjust the 2-megohm potentiometer until four signals can be counted between each 100-kilocycle marker signal on your receiver. Finally, if an oscilloscope is available, connect the vertical amplifier to pin 10 on P_1, setting the horizontal sweep for two or three cycles on the screen. The waveforms for both 20- and 100-kilocycle signals should approximate those shown in FIG. 3.

If you already have a 100-kilocycle frequency standard, try adding the frequency divider stage to help spot that net frequency.

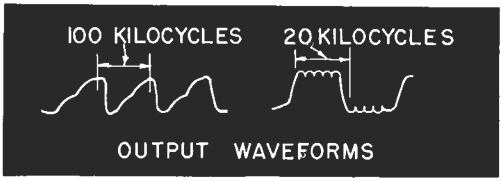

FIG. 3. OUTPUT WAVEFORMS which should be obtained at pin 10 on P_1 when S_1 is in (left) the *20-KC* position; and (right) in the *100-KC* position.

---

hum pickup; and the meter, *M*. The meter shown on page 1 has a flange only 1¾ inches square, but the layout allows space for round or square meters having the standard body diameter of 2¼ inches. A rotary tap switch can be substituted for the lever-action switch shown for S_1 by drilling a hole ⅜ of an inch in diameter in place of the slot.

CONNECTIONS to this unit, other than those made through P_1, consist of a two-wire shielded lead from the telephone line to J_2, the microphone cord to J_1 and a shielded single-conductor lead from J_3 or J_4 to the transmitter audio input. Proper settings for the *MIKE GAIN* and *PATCH GAIN* controls is best determined by experiment. The 500-ohm potentiometer in the cathode of the second 6BA6 controls the compression level. It should be set to the highest resistance that does not result in the microphone picking up an objectionable amount of background noise in the radio shack.

FIG. 1. SCHEMATIC DIAGRAM for the combination audio preamplifier/limiter/phone patch unit. All resistances not otherwise marked are ½-watt power rating; all capacitance values not otherwise marked are in mmf. Potentiometers should have a ½-watt rating.

NOTE: If the Merit A-3001 vertical oscillator transformer is used for T_1, connections should be made as follows: Brown and black leads to J_2; red and blue leads to the PATCH GAIN potentiometer; and the yellow and green leads to the speaker circuit. Other standard transformers may have the same color-coding on leads.

PARTS LIST

J_1	female connector to fit microphone plug.
J_2	3-circuit phone jack.
J_3, J_4	midget phono type jacks.
J_5, J_6	insulated phone tip jacks.
M	0—1 DC milliammeter, 1¾-inch flange, 1½-inch-diameter body (Lafayette TM-11 shown on model G.E. type DW-91 also suitable.
P_1	11-prong male octal plug (Amphenol 86-PM11).
S_1	4-pole, 3-position, non-shorting lever action switch (Mallory 6243; or use equivalent single section rotary tap switch).
T_1	three-winding vertical output transformer (Merit A-3001, or equivalent).

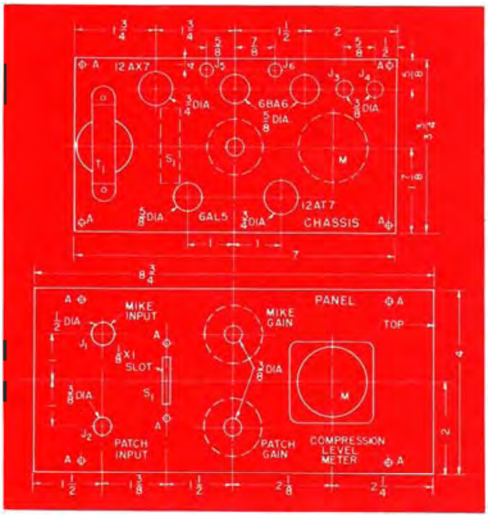

FIG. 2. PANEL-CHASSIS LAYOUT diagram. The panel plate is viewed from the front; chassis plate from the rear. Drill mounting holes to match feet on T_1 and locate it between the plates if possible. Holes marked "A" are for corner posts, which should be 3 inches long, tapped at both ends.

1958 ALL-AMERICAN AWARDS

THREE RADIO AMATEURS

are among ten electronics technicians honored for outstanding community service in 1958.

THREE SMILING RADIO AMATEURS, shown above just after receiving their trophies and checks for $500 at the 1958 ALL-AMERICAN AWARDS presentation, are: Vernon Townsend, W9YCY; Wayne Lemons, KOCEC; and Albert Kazukonis, ex-W1OBZ.

Townsend, of Menomie, Wis., while serving as Dunn County RACES Radio Officer, quickly organized emergency communications and operated his mobile station steadily for three days after a tornado devastated Western Wisconsin last June.

Lemons, of Buffalo, Mo., has conducted extra-curricular courses in electronics at several schools in Missouri, in addition to civic activities in the Little League, Boy Scouts and other youth groups; and Rotary and other community service agencies.

Kazukonis, Brockton, Mass., has aided technical programs in schools through donations of supplies, taught radio classes, and promoted better busines ethics as an official of the Brockton chapter of the Electronic Technicians Guild of Massachusetts.

Thirteen radio amateurs were among the candidates for the 1958 Awards. Three were winners; another, Henry Falconio, W9OIL, was awarded an honorable mention plaque. The others, who received certificates of commendation, are: W1AD, W3DYE, W3SCT, W6QPF, W7JMM, KN8LLA, K9IEY, W0IRM, and W0ZVD.

The ALL-AMERICAN AWARDS program, to honor electronics service technicians who have distinguished themselves through community service, is sponsored annually by General Electric's Receiving Tube Department in Owensboro, Ky.

NOVEMBER—DECEMBER, 1958

VOL. 13—NO. 6

Available FREE from your G-E Tube Distributor

HAM NEWS

E. A. Neal, W2JZK—Editor

published bi-monthly by

ELECTRONIC COMPONENTS DIVISION

GENERAL ELECTRIC

Schenectady 5, N. Y.

HAM NEWS

JANUARY–FEBRUARY, 1959

In this issue . . . . .

7077 R.F. AMPLIFIERS

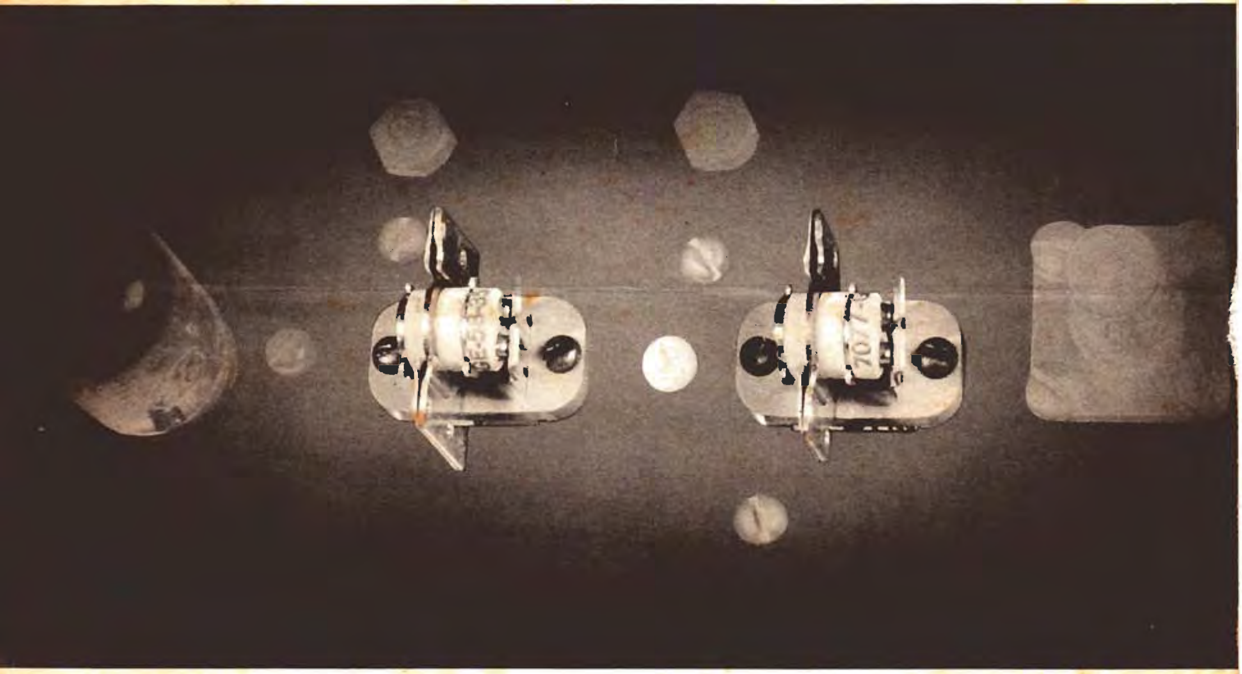

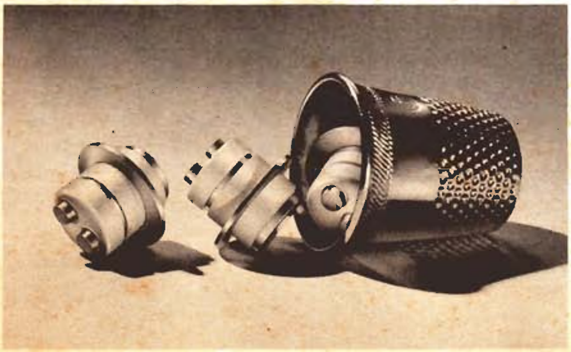

The new G-E 7077 micro-miniature ceramic triode opens the door to greater DX for amateurs on the VHF bands through lower noise figures. Read herein how W2ZHI has designed RF amplifiers using this tube for his 144 and 432-megacycle converters.

—Lighthouse Larry

SCANNING the SPECTRUM

***AS WE GO TO PRESS**—a 7077 in a 200-milliwatt output class B linear amplifier in the Army's 66,000-mile Juno II moonshoot December 14 permitted much greater tracking accuracy. The 10-milliwatt output from a 960.05-megacycle transitor oscillator was thus boosted to a useable level in a new microwave tracking system.*

MEET THE DESIGNER . . .

W2ZHI—William (Bill) N. Coffey, developed the 144- and 432-megacycle r.f. amplifiers described herein as part of noise figure studies in his work as a research engineer with General Electric's world-renown *Research Laboratory* in Schenectady.

It should be obvious that Bill is a VHF enthusiast, with rigs ranging in power from a few to several hundred watts on these amateur bands. Much of his operating time is spent on the 144-megacycle band. He has been a licensed amateur for 21 years and holds an Extra Class license.

W2ZHI will best be remembered for his pi-network overtone crystal oscillator circuit shown used in our 1955-vintage 50-megacycle equipment.

NEW HEATERLESS MINIATURE CERAMIC TUBES

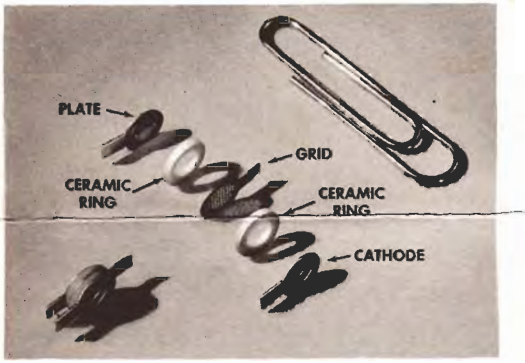

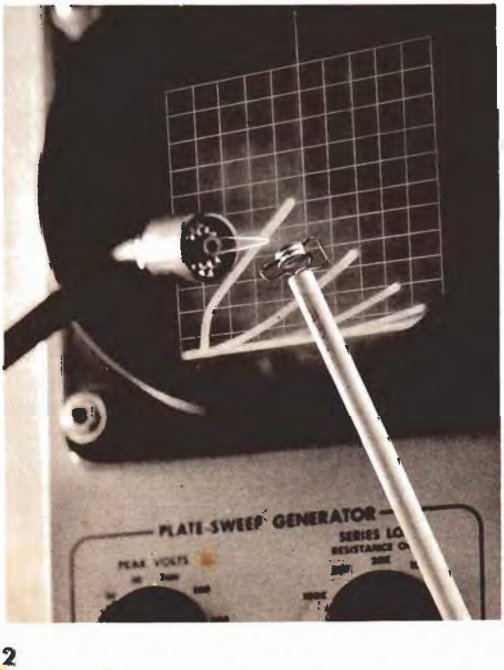

DEVELOPMENT OF AN ELECTRONIC TUBE not much larger than a shirt button has been announced by the General Electric *Research Laboratory*. The miniature tube is capable of operating at temperatures of from 900° to 1500° Fahrenheit.

THE EXPERIMENTAL MODELS now being evaluated, shaped like flat disks, measure only ¼ inch in diameter and ⅛ inch thick. Their extremely small size is due in part to the fact that they contain no heater, all the heat necessary being provided by their environment. The design is still in the laboratory stage and *no tubes are commercially available* at this time. They are constructed of layers of *titanium* and a *special ceramic*.

The views at the left (upper) show an exploded tube; and (lower) the heaterless tube actually operating in the flame of a blowtorch (flame temperature about 600 degrees C), producing the characteristic curves visible on the oscilloscope screen in the background. This demonstrates the new tube's ability to withstand high temperatures. Much lighter electronic equipment for military and space vehicles thus is possible by eliminating heavy, bulky cooling equipment.

DEVELOPMENTAL TYPES of the new tube have been made with a wide range of characteristics, of which two are given below.

DESIGN VALUES	No. 1	No. 2
Entire tube temperature	600°	600° Centigrade
Mutual conductance	250	6000 micromhos
Plate current	0.5	5 milliamperes
Grid voltage	0	0
Plate voltage	50	100 volts
Grid current	0.1	0.1 microamperes
Amplification factor	15	100

Look, men—no heater ratings!

—*Lighthouse Larry*

7077 R.F. AMPLIFIER

for the 432-megacycle band

Here are circuit and construction ideas for operating the new 7077 as r.f. amplifiers in converters for the 420–450-megacycle band.

LOWER RECEIVER NOISE FIGURES are now possible on the popular v.h.f. and u.h.f. amateur bands with r.f. amplifiers using General Electric's new 7077 micro-miniature triode. This improvement really shows up above 400 megacycles, where the two-stage grounded-grid r.f. amplifier in the converter described herein has a measured noise figure of 5 decibels, about 3 to 5 decibels lower than similar circuits with conventional tubes.

CIRCUIT TECHNIQUES not often seen in amateur radio circles were employed in these stages; namely, flat plate type one-quarter wavelength linear tuned circuits. These devices, shown as L_1, L_2 and L_3 in the schematic diagram, FIG. 1, consist of a strip of sheet metal ½-inch wide running parallel to the chassis. One end is joined to the chassis electrically; the other end—having a high r.f impedance—connects to the tube element. The characteristic impedance of these particular flat plate lines is 115 ohms.

Signals on the 420–450-megacycle band, fed into J_1, are applied to L_1 and thence to the cathode of the first 7077 tube. The plate of this tube is connected to L_2, the latter forming an impedance step-down transformer to the cathode of the second 7077 through a 500-mmf capacitor.

The plate of the second 7077 is coupled to the cathode of a 6AM4 triode, operating as a grounded-grid mixer through L_3. The local oscillator signal—on 406 megacycles in this particular converter—is fed into L_3, through a small coupling loop, L_4 on J_2, next to L_3.

All tube elements in these stages were tapped onto the tuned circuits at optimum points determined by experiment. The 26- to 30-megacycle difference signal at the mixer tube plate runs through a pi-network broadband tuned circuit—consisting of the 2.2 mmf capacitor from the 6AM4 plate to chassis, C_5 and L_6—to J_3. A trap tuned to 406 megacycles—C_4 and L_5—keeps the local oscillator signal from feeding into the converter output.

Several r.f. chokes are used in these circuits to prevent signal loss: RFC_1, RFC_9, and RFC_{10} in cathode bias leads; RFC_2, RFC_3, RFC_4, RFC_5, RFC_6 and RFC_7 in the heater leads; and RFC_8 in the mixer stage plate supply lead.

Continued on page 5

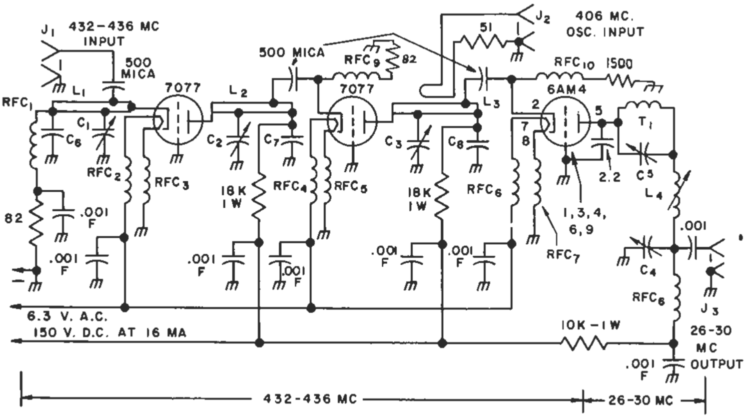

FIG. 1. SCHEMATIC DIAGRAM for the r.f. amplifier and mixer portions of the 432-megacycle converter. All resistances are in ohms, ½ watt unless otherwise specified. All capacitances are in mmf unless otherwise specified.

PARTS LIST—COIL TABLE

C_1, C_2, C_3, C_5 .. 0.5—5.0-mmf piston type midget trimmers.

C_4............15–130-mmf ceramic-insulated mica trimmer.

C_6, C_7, C_8 ...... special bypass capacitors formed by chassis and a ¾x2-inch brass plate with a 0.001-inch-thick mica spacer. See FIG. 4 for details.

J_1, J_2, J_3...............chassis type coaxial cable connectors.

L_1, L_2, L_3 ....¼-wavelength flat plate type linear tuned circuits; see FIG. 4 for constructional details.

L_4.......... strip type coupling loop; see FIG. 2 for details.

L_5 ....4-uh, shielded slug-tuned coil (CTC LS-10, 30 Mc).

RFC_1....... 0.58 uh, 9 turns, No. 18 enameled wire, ⅜ of an inch in inside diameter, ½ inch long.

RFC_2, RFC_3, RFC_4, RFC_5 ...... 0.34 uh, 10 turns, No. 22 enameled wire, ⅜ of an inch winding length, on ¼-inch diameter polystyrene or Teflon rod.

RFC_6, RFC_7....... 0.34 uh, bifilar wound choke consisting of two strands of No. 22 enameled wire, 10 turns in each coil, closewound on ¼-inch diameter rod.

RFC_8 ....100 uh pi-wound r.f. choke (National R-33, 100 uh).

RFC_9 ...... 0.34 uh, 10 turns, No. 18 enameled wire, ⅜ of an inch long, on ¼-inch diameter rod.

RFC_{10} ...... 0.32 uh., 10 turns, No. 18 enameled wire, ½ of an inch long, on ¼-inch diameter rod.

T_1........406-megacycle trap, consisting of a 0.05-uh coil—3 turns, No. 18 enameled wire ⅛ of an inch long, wound on the shank of a No. 25 drill (0.146 inches in diameter)—connected across C_5.

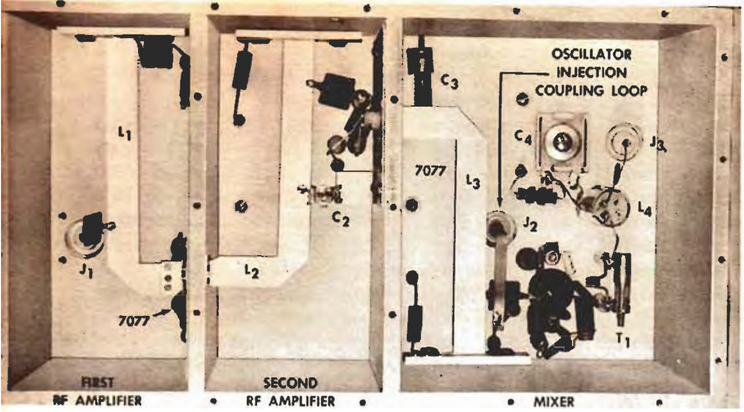

OVER-ALL BOTTOM VIEW of the 432-megacycle converter. Major parts have been identified. Although ¼-inch-thick sheet brass was used for chassis and partitions on this model, 1/16-inch-thick brass is suitable. All chassis parts were soldered together and then silver plated for highest conductivity of r.f. currents.

Note that there is a 0.001-inch-thick insulator between the side wall and the mounting plates on L_1, L_2 and L_3. The cathode bias circuit for the first 7077 runs through RFC_1 to L_1. Plate voltage for both 7077's is fed into L_2 and L_3 through 18,000-ohm resistors via 0.001-mfd feedthrough type ceramic capacitors.

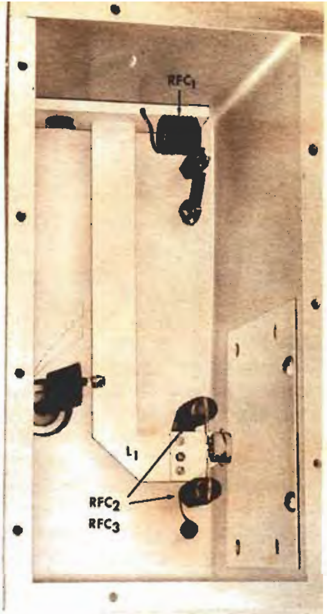

DETAIL VIEW of the first r.f. amplifier compartment, showing L_1 connected to the cathode ring of the 7077 tube. The 82-ohm cathode bias resistor connects between RFC_1 and a ground lug below it.

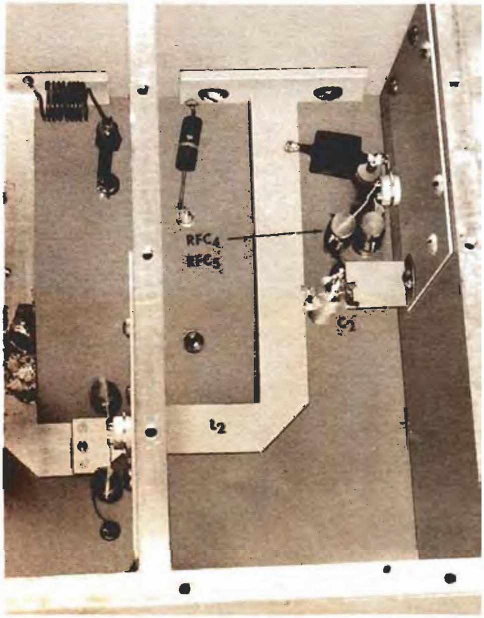

THE SECOND R.F. AMPLIFIER compartment. A small angle bracket formed from 1/32-inch-thick sheet brass supports C_2. The mica capacitor tapped onto L_2 feeds signals into the cathode of the second 7077. Cathode bias for this tube runs through RFC_9, located right underneath the mica coupling capacitor.

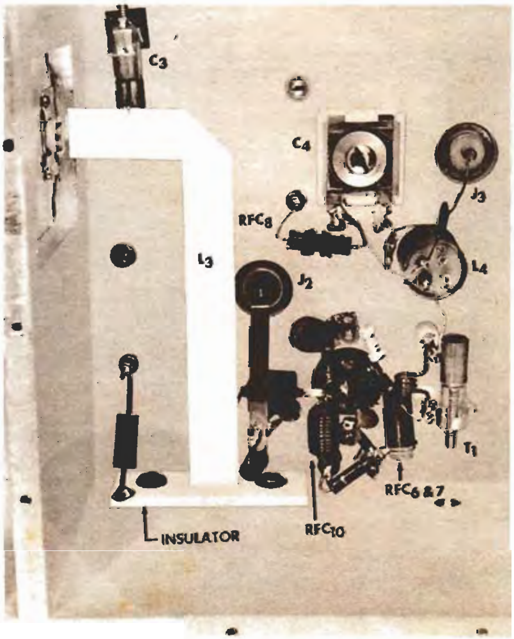

THE MIXER COMPARTMENT, showing L_4—the oscillator injection loop—running between J_2 and the 51-ohm terminating resistor for the coaxial cable. All grid lugs on the 6AM4 mixer tube socket—pins 1, 3, 4, 6 and 9—have been bent over and soldered to the chassis.

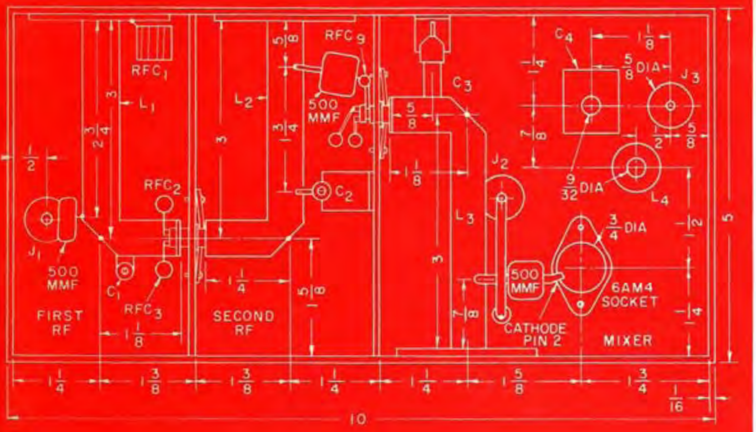

FIG. 2. CHASSIS LAYOUT DIAGRAM for the 432-megocycle converter. Over-oll dimensions and positions for taps on L₁, L₂ and L₃ are shown. Note thot o side view of the oscillator injection coupling loop, L₄, is included in the mixer compartment portion of the diagram.

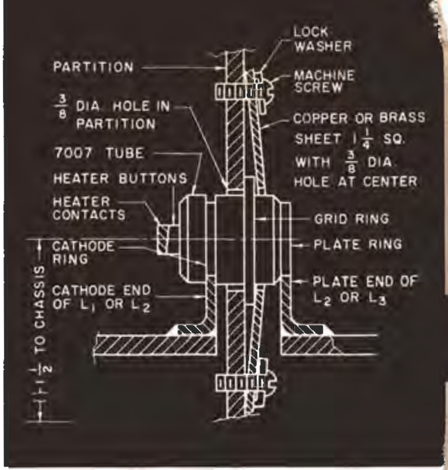

FIG. 3. DETAIL DRAWING for mounting the 7077 tubes. The clamping plate can be fastened either with machine or self-tapping screws ¼-inch long.

7077 R.F. AMPLIFIER

Continued from page 3

The 406-megacycle local oscillator—actually a three-stage crystal oscillator-multiplier circuit—is not shown here.[1]

CONSTRUCTION of the r.f. amplifier stages—or the complete converter—involves more precise mechanical work than circuitry for the lower frequencies, but is easily handled with the usual home workshop hand tools. The model shown in the views on page 4 has walls and partitions of ¼-inch-thick brass, but 1/16-inch-thick brass would be equally suitable. The over-all mechanical layout and principal dimensions are shown in the chassis layout diagram, FIG. 2.

Excellent isolation between the input and output portions of each stage was achieved by mounting the 7077 tubes through holes in the interstage partitions. Details of the 7077 clamping plates are shown in FIG. 3.

Constructional details for the flat plate tuned circuits are shown in the drawing of FIG. 4. Note that the input line (L_1) is slightly shorter than L_2 and L_3. The spacing between the flat line and the chassis affects the resonant frequency more than the over-all length. This permits bringing the resonant frequency of these circuits to within the adjustment range of the trimmer capacitors (C_1, C_2 and C_3) simply by bending the strip.

THE ALIGNMENT PROCEDURE is quite simple, once the usual checks for heater voltage and presence of plate current flow in each stage have been made. The pi-network circuit in the mixer should be tuned to 28 megacycles and will then pass 26 to 30 megacycles.

Alignment of the flat plate lines, L_3, L_2 and L_1 should be in that order, using a signal in the 420–450-megacycle range. If you wish to concentrate on the popular 432–436-megacycle section, use a 434-megacycle signal. The antenna input tap position on L_1, 3.0 inches from the grounded end, was found to provide lowest noise figure when checked with a noise generator. If this instrument is available, try shifting the tap a bit in both directions to see if a lower noise figure results. Much data has been published on making adjustments to receiver input circuits with noise generators,[2] so this subject will not be covered here.

At 420 megacycles, the 7077 is capable of providing as low a noise figure as any other tube presently available—and it can be used in proven circuits with which most radio amateurs are familiar.

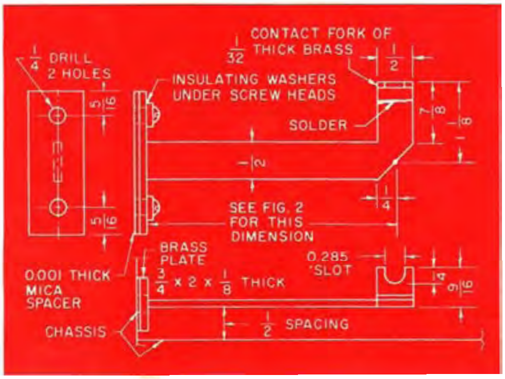

FIG. 4. CONSTRUCTIONAL DETAILS of the flat plate tuned circuits, L₁, L₂ and L₃, in this converter. The end of the copper strip is cut to form forks which slip onto the cathode and plate rings of the 7077 tubes.

---

[1] Write to the G-E *HAM NEWS* office for a bulletin showing the circuit and constructional details of the crystal oscillator-multiplier unit for this converter. This circuit, incidentally, has a 6C4 oscillator with a 67.667-megacycle crystal, a 5763 doubler to 135.334 megacycles, and a 6939 tripler to 406 megacycles.

[2] See chapter 12, *VHF HANDBOOK*, by William I. Orr, W6SAI, and H. G. Johnson, W6QKI; A. R. Koch, W2RMA, "Low Noise 220-megacycle Converter," *G-E HAM NEWS*, September-October, 1954, page 2; E. P. Tilton, "Noise Generators—their Uses and Limitations," *QST*, July, 1954, page 10.

7077 R.F. AMPLIFIER

for the 144-megacycle band

IS YOUR LOCATION QUIET? *If so, this cascode r.f. amplifier using two 7077 triodes will really build up those weak, long-haul 144-megacycle signals.*

RADIO AMATEURS who specialize in 144-megacycle DX can now improve the performance of their receivers with this two-stage r.f. amplifier. It will achieve a substantially lower noise figure—between 2.5 and 2.8 decibels—than amplifiers with conventional miniature tubes. The usual cascode r.f. amplifier at 144-megacycles, with a 6BK7, 6BQ7, or 6BZ7 twin triode, will have a 6- to 8-decibel noise figure. Two-stage grounded-grid amplifiers using 6AM4 or 6BN4 tubes usually have noise figures in the range of 4.5 to 6.5 decibels.

CONVENTIONAL TUNED CIRCUITS having lumped constants were used throughout the 144-megacycle converter shown in the schematic diagram, FIG. 1. The input signal from the coaxial cable input jack (J_1) feeds through the first 7077, in a grounded-cathode circuit, then into the cathode of the second 7077, a grounded-grid amplifier. A neutralizing coil (L_2), prevents the first stage from oscillating and improves the noise figure when properly adjusted.

A conventional miniature triode—the 6AM4, 6BN4, or triode-connected 6AK5—could be substituted for the second 7077 with little degradation in noise figure if lower cost is desired.[1] The cascode stage is followed by a 6AK5 pentode r.f. amplifier. This stage and the balance of the circuit is quite conventional; a 6U8 triode section as the mixer, and the pentode section as a 14- to 18-megacycle broadband i.f. amplifier.

The triode section of a second 6U8 functions as a crystal oscillator at 65 megacycles, operating a 21.667-megacycle crystal on its ninth overtone. The oscillator employs the pi-network feedback circuit described in G-E *HAM NEWS* a few years ago.[2] A 65-megacycle crystal can be used instead, but be sure to operate it in the circuit recommended by the manufacturer.

THE 7077 STAGES were constructed on a separate copper plate about 4 inches square, simplifying the addition of this amplifier to existing 144-megacycle converters. One of the special sockets[3] for the 7077 tubes was modified—it was originally designed for grounded-grid circuits—by trimming away some of the metal shield on the grid contact to clear the copper plate by ⅛ of an inch. Rectangular holes were cut in the plate to clear lugs on the sockets.

Locations for the other major components can be determined from the top and bottom view photos. Sockets for the 6AK5 and 6U8 tubes were positioned to permit shortest possible leads. The oscillator section was shielded from the rest of the converter with a metal partition.

FIRST CHECK for heater and plate voltages on all stages, then follow the usual alignment procedure for VHF converters. The various

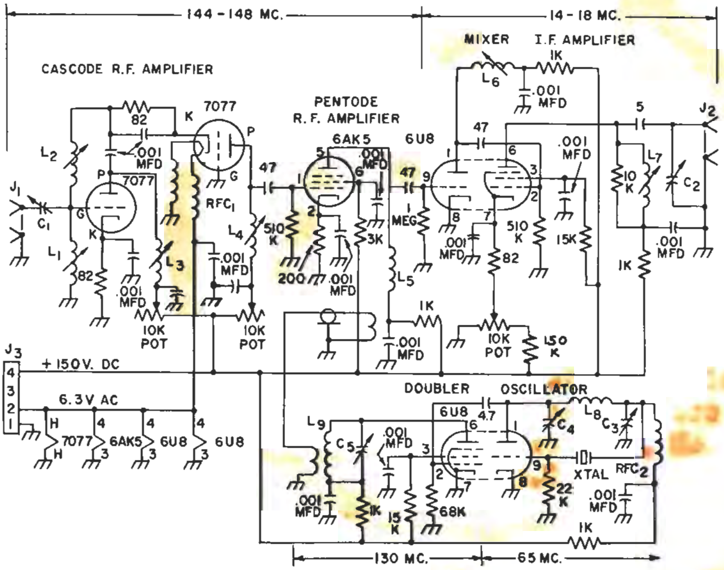

FIG. 1. SCHEMATIC DIAGRAM of the 144-megacycle converter showing the two 7077 micro-miniature tubes in a cascode r.f. amplifier circuit. Link coils, coupled to L_5 and L_9 and connected with a short length of coaxial cable, feed the 130-megacycle oscillator signal into the mixer stage. All resistances are in ohms, ½ watt unless otherwise specified. All capacitance values not otherwise marked are in mmf.

(RIGHT) **BOTTOM VIEW** of the 144-megacycle converter. The chassis used on this model was a 12 x 7 x 3-inch *Minibox* (Bud CU-3011), but all components will fit into a smaller box. The copper plate on which the r.f. amplifier is constructed shows up as a dark area. The potentiometers for adjusting plate current through the 7077 tubes are on the end of the box.

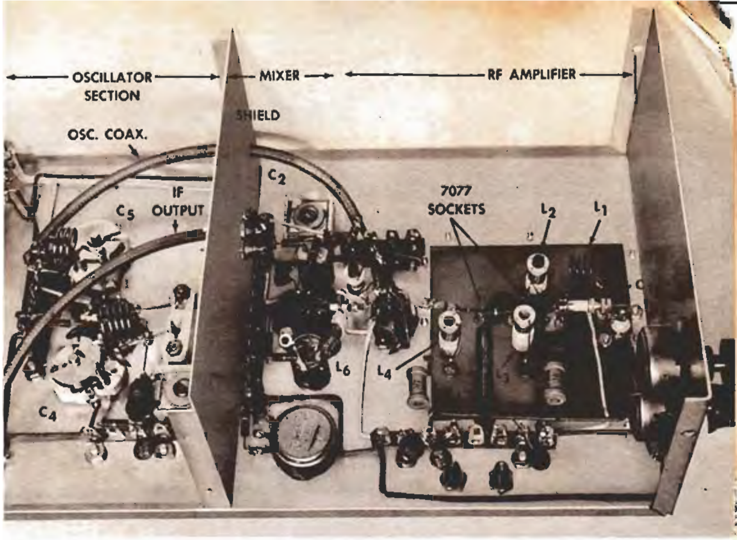

(BELOW) TOP VIEW of the r.f. amplifier portion of the converter. Note how the 7077 tubes slide into the sockets. The large grid plate on the socket at the right was trimmed as outlined in the text.

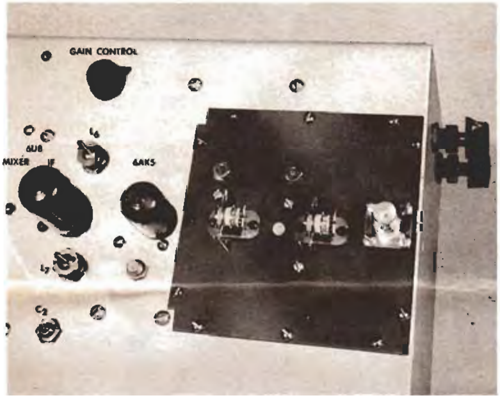

PARTS LIST—COIL TABLE

C_1	1—8-mmf midget trimmer.
C_2	15—115-mmf mica padder.
C_3	65-315-mmf mica padder.
C_4 C_5	3.0—25 mmf air trimmer (Hammarlund APC-25).
J_1, J_2	chassis type coaxial cable connector.
J_3	4-prong male power connector.
L_1	0.18 uh; 4 turns, No. 16 wire ⅜ inch inside diameter, ½ inch long, wound 8 turns per inch.
NOTE:	L_2, L_3, L_4 and L_5 are wound with No. 22 enameled wire on ¼-inch diameter steatite coil forms with iron tuning slugs, 13/32 of an inch winding length (Millen No. 69048 or equivalent).
L_2	0.76 uh; 10 turns, closewound, ¼ inch long.
L_3	0.4 uh; 5¾ turns, spacewound, 5/16 inch long.
L_4	0.2 uh; 4 turns, spacewound ⅜ inch long.
L_5	0.17 uh; 3 turns, spacewound ¼ inch long, with 2-turn link coil of hookup wire.
L_6, L_7	10 uh; shielded coil wound on cup-core type iron slug tuned form (CTC LS-10, 10 Mc. coil).
L_8	5 turns, No. 16 wire, ⅜ inch inside diameter, ⅝ inch long, wound 8 turns per inch.
L_9	3 turns, No. 16 wire, ⅜ inch inside diameter, ⅜ inch long, wound 8 turns per inch, with 2-turn link.
RFC_1	bi-filar filament r.f. choke; two strands of No. 26 enameled wire wound 1½ inches long on ¼-inch diameter bakelite rod.
RFC_2	0.5 mh, 75 ma r.f. choke (National R-50).

tuned circuits may be aligned to obtain a 4-megacycle bandpass; or, a portion of the band may be favored by aligning all tuned circuits at the midpoint of that band segment.

The alignment sequence is as follows: (1) get the crystal oscillator stage working on 65 megacycles; (2) tune the multiplier for maximum output on 130 megacycles; (3) feed 15- and 16.5-megacycle signals into the grid of the 6U8 mixer and align, L_6 and L_7, respectively; (4) feed a 146-megacycle signal into the grid of the 6AK5 and peak L_5; (5) feed a 145-megacycle signal into J_1 and peak L_4; (6) shift the signal to 146 megacycles and peak L_3; (7) shift the signal to 144.5 megacycles and peak L_1.

Finally, remove heater voltage from the first 7077 and adjust L_2 for *minimum* signal at 144.5 megacycles. Adjusting C_1 for lowest noise figure should be done with a noise generator; the calculated capacitance value for this condition is 4 mmf.

The above alignment frequencies will result in a fairly flat bandpass between 144 and 147 megacycles, with best performance between 144 and 145 megacycles.

The 7077 tube should make an excellent r.f. amplifier tube for the 220-megacycle amateur band in either the cascode or grounded-grid circuit. However, we have not checked it out yet, but expect to do so at an early date.

---

[1] Suggested user price of the 7077 as of press date is $31.14 each.

[2] W. N. Coffey, W2ZHI, "6-Meter Transceiver," G-E *HAM NEWS*, July-August, 1955, pages 3 and 4; also "Simple Sixer Converter," September-October, 1955, pages 3 and 4.

[3] Catalog No. 8670, Jettron Products, Inc., Route 10, Hanover, N. J.

Mo.

TECHNICAL INFORMATION—7077

Micro-miniature triode for UHF amplifier applications

ELECTRICAL AND MECHANICAL DATA—MAXIMUM RATINGS

Cathode—Coated Unipotential		
Heater Voltage, AC or DC	6.3 ±5%	Volts
Heater Current	0.24	Ampere
Direct Interelectrode Capacitances		
Plate to Cathode and Heater	0.01	uuf
Cathode and Heater to Grid	1.9	uuf
Plate to Grid	1.0	uuf
Heater to Cathode	1.0	uuf
Plate Voltage	250	Volts
Positive Peak and DC Grid Voltage	0	Volts
Negative Peak and DC Grid Voltage	50	Volts
Plate Dissipation	1.0	Watt
DC Cathode Current	10.0	Milliamperes

TYPICAL OPERATION—GROUNDED-GRID AMPLIFIER—450 MC.

Plate Supply Voltage	250	Volts
Resistor in plate circuit (by-passed)	18000	Ohms
Cathode-Bias Resistor	82	Ohms
Amplification Factor	80	
Plate Resistance, approximate	8900	Ohms
Transconductance	9000	Micromhos
Plate Current	6.4	Milliamperes
Bandwidth, approximate	7.5	Megacycles
Power Gain, approximate	14.5	Decibels
Noise Figure (Measured with power-matched input, using argon lamp noise source), approximate	5.5	Decibels

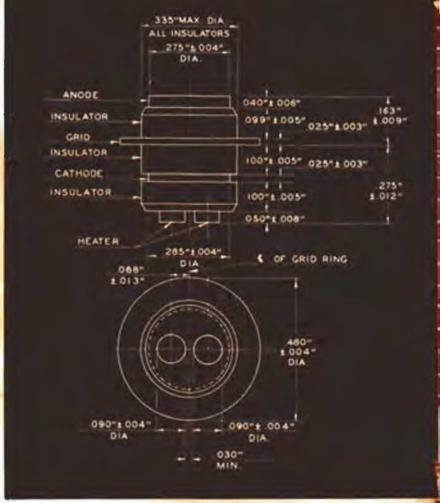

PHYSICAL DIMENSIONS

The 7077 is a high-mu triode of ceramic and metal planar construction primarily intended for use as an r-f amplifier in the 30- to 1200-megocycle frequency range. It features an extremely low noise figure throughout its frequency coverage. The 7077 is especially suited for use where unfavorable conditions of temperature, mechanical shock, and mechanical vibration are encountered.

JANUARY—FEBRUARY, 1959

VOL. 14—NO. 1

E. A. Neal, W2JZK—Editor

published bi-monthly by

ELECTRONIC COMPONENTS DIVISION

GENERAL ELECTRIC

Schenectady 5, N. Y.

Available FREE from your G-E Tube Distributor

HAM NEWS

Electronic Components Division
GENERAL ELECTRIC
Company, Bldg. 267
Schenectady 5, N.Y.

Sec. 34.66 P.L.&R.
U. S. POSTAGE
PAID
Schenectady, N.Y.
Permit No. 148

Mr. Louis Arivello, WOCPI
8829 Moritz Place
Brentwood 17, Mo.
E-233.2

POSTMASTER: If addressee has moved and new address is known, notify sender on Form 3547.
Form 3547 Requested

9-5-58

G-E
HAM NEWS

Read herein how K2IOW has designed a clever bandswitching VFO around the high-C Colpitts oscillator circuit from our 150-WATT SINGLE BANDER transmitters in G-E HAM NEWS a year ago.

—Lighthouse Larry

MARCH–APRIL, 1959

In This Issue . . . .

High-C
BANDSWITCHING VFO

Also—

SCANNING the SPECTRUM

MEET THE DESIGNER . . . .

K2IOW—Robert A. Hall, tailored the high-C oscillator circuit to his own station needs; specifically, driving his 6AG7 oscillator-paralleled 6L6-GB transmitter (adapted from the popular *QST/Radio Amateur's Handbook* design) on all bands. Bob, who enjoys building as much as operating on 3.9, 7.2, 14.2 and 21.3 megacycle phone, is an engineer with General Electric's Manufacturing Engineering Services operation in Schenectady, N. Y.

Starting as a Novice two years ago, Bob has logged thousands of hours of hamming to date, both on the air and at his workbench. Another item of his handiwork—a desk-top all-band one-kilowatt final amplifier, with paralleled GL-810 triodes, driven by the above 75-watter—will be described in the September-October, 1959 issue of *G-E HAM NEWS.* Bob even called upon another of his hobbies—photography—to supply us with pictures of his neat kilowatt package.

QUITE OFTEN we're asked what "Design-Maximum ratings" on our receiving, Five-Star and special purpose tubes means. And casting about for an answer, the most comprehensive explanation we could find appears on the Description and Rating sheet published by our technical data people for each of our tubes.

This statement says:

"Design-Maximum ratings are limiting values of operating and environmental conditions applicable to a normal tube of a specified type as defined by its published data, and should not be exceeded under the worst probable conditions.

"The tube manufacturer chooses these values to provide acceptable serviceability of the tube, taking responsibility for the effects of changes in operating conditions due to variations in tube characteristics.

"The equipment manufacturer should design so that initially and throughout life no design-maximum value for the intended service is exceeded with a normal tube under the worst probable operating conditions with respect to supply-voltage variation, equipment component variation, equipment control adjustment, load variation, signal variation, and environmental conditions."

High-C

BANDSWITCHING VFO

EVER SINCE K7BGI *helped revive interest in high-capacitance oscillator circuits,*[1] *many requests have been received for a bandswitching oscillator utilizing this principle. Two models are described; one showing a Millen 10039 dial, and the other a National SCN dial.*

ONCE A NOVICE radio amateur earns his General class license, usually his first thought is directed toward adding a variable frequency oscillator (hereafter known as VFO) to his transmitter. Although there are several VFO kits on the market at moderate cost, some fellows simply like to "roll their own." Thus, the High-C BANDSWITCHING VFO was designed to answer this need.

The output frequency of this VFO is either at the transmitter frequency, or one half of it. This permits the oscillator in a two-stage transmitter to operate as a straight amplifier or doubler, respectively, assuring plenty of driving power for the output stage.

Rather than have just one basic oscillator tuning range—with the resultant crowding of some amateur bands into a small portion of the tuning dial—a circuit was developed whereby each of the popular amateur bands could be spread out over most of the dial. Even though the switching circuitry in the left side of the schematic diagram, FIG. 1, looks complex, it largely consists of extra fixed capacitances switched in parallel and in series with one or two sections of the main tuning capacitor, C_1, to obtain the desired oscillator tuning range.

TABLE I SHOWS the oscillator grid and plate frequencies for each amateur band and the actual components in use. Capacitors C_9 and C_{10} (0.002 mfd each) are always in series across the frequency determining circuit. They form the capacitive r.f. voltage divider for feedback.

The 6AH6 oscillator tube always doubles or triples the grid circuit frequency in the plate circuit. This helps reduce *pulling* of the oscillator frequency due to changes in loading on the output circuit. The value of C_{15} (200 mmf) was selected for a 2-foot length of RG-58/U coaxial cable on J_2; reduce this capacitance to 100 mmf for cable lengths between 2 and 5 feet. A link coupled output circuit also could be employed by substituting a 2-pole switch wafer at S_{1D} to connect the proper link coil to J_2.

The power requirement is quite low; 6.3 volts AC or DC for the 6AH6 heater, and 150 to 250 volts DC at 15 milliamperes for the plate circuit. The recommended plate and screen voltage regulating circuitry for the VFO is shown in FIG. 2.

continued on page 6

---

[1] S. G. Reque, K7BGI, "Technical Tidbits—HIGH-C OSCILLATORS," G-E HAM NEWS, November–December, 1957, page 6.

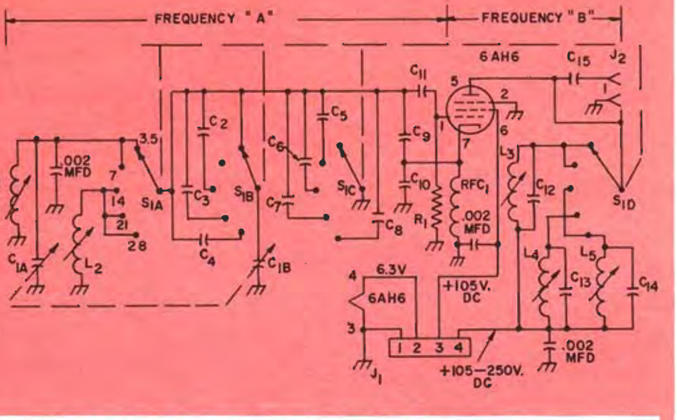

FIG. 1. SCHEMATIC DIAGRAM of the bandswitching high-c variable frequency oscillator VFO. Capacitors across the oscillator grid tuned circuit for each band are described in the text. Grid and plate circuit frequencies, "A" and "B" respectively, are listed in Table I. All capacitances are in mmf unless otherwise specified. Chassis grounds should be made at points shown.

TABLE I—HIGH-C OSCILLATOR FREQUENCY CHART

Transmitter Output, MC.	Grid Circuit		Plate Circuit—Output	
	Tuning Range, MC.	Active Components in Circuit	Oscillator Output, MC.	Active Components in Circuit
3.5–4.0	1.75–2.0	.022 mfd, C_{1A}, C_{1B}, C_9, C_{10}, L_1	3.5–4.0	C_{12}, L_3
7.0–7.3	1.75–1.825	.002 mfd, C_{1A}, C_5, C_9, C_{10}, L_1	3.5–3.65	C_{12}, L_3
14.0–14.35	7.0–7.2	C_{1B}, C_2, C_6, C_9, C_{10}, L_2	14.0–14.4	C_{14}, L_5
21.0–21.45	7.0–7.150	C_{1B}, C_3, C_7, C_9, C_{10}, L_2	21.0–21.45	C_{13}, L_4
28.0–29.7	7.0–7.45	C_{1B}, C_4, C_8, C_9, C_{10}, L_2	14.0–14.9	C_{14}, L_5

PARTS LIST—COIL TABLE

C_{1A}, C_{1B}	_ section broadcast variable, 15—420-mmf per section (Philmore 9046).
C_2	120-mmf silvered mica
C_3	100-mmf silvered mica
C_4	500-mmf silvered mica
C_5	450-mmf silvered mica (400 and 50)
C_6	300-mmf silvered mica
C_7	320-mmf silvered mica (300 and 20)
C_8	250-mmf silvered mica
C_9, C_{10}	0.002-mfd silvered mica
C_{11}, C_{15}	200-mmf silvered mica
C_{12}, C_{14}	30-mmf silvered mica
C_{16}	20-mmf silvered mica
J_1	4-prong male plug (Jones P-304-AB)
J_2	1-prong female chassis phono jack
L_1	3 uh, 17 turns, No. 18 enameled wire on ½-inch diameter iron slug-tuned coil form, 1 $\frac{1}{16}$-inch winding length. (National XR-50).
L_2	0.4 uh, 6 turns, No. 16 enameled wire on ½-inch diameter iron slug tuned coil form, $\frac{11}{16}$-inch winding length (National XR-50).
L_3	30—70 uh, scramble-wound iron slug-tuned coil (CTC LS-3, 5-MC ready-wound coil, marked with green dot on winding).
L_4	1.0—2.0 uh, 12 turns, No. 24 enameled wire spacewound ⅜ of an inch long on ⅜-inch diameter iron slug-tuned coil form (CTC-LS-3 blank form).
L_5	1.5—3 uh, 18 turns, No. 24 enameled wire, closewound ⅜ of an inch long on ⅜-inch diameter form (CTC LS-3 blank form).
R_1	47,000 to 100,000-ohms, 1 watt (see text).
RFC_1	1 mh pi-wound r.f. choke (National R-50).
S_1	4 pole, 5 position, steatite rotary tap switch, assembled from the following Centralab 2000 series miniature switch parts: 1—PA-302 index assembly; 1—PA-2007 switch wafer (3 poles, 5 positions, for S_{1A}, S_{1B} and S_{1C}); 1—PA-2001 switch wafer (1 pole, 11 positions; only 5 positions used for S_{1D}).

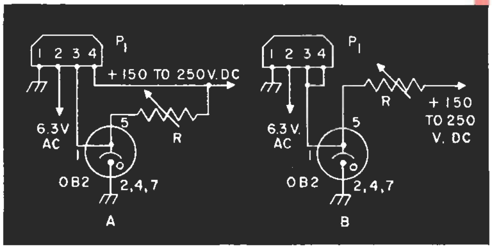

FIG. 2. SCHEMATIC DIAGRAM for the recommended voltage regulator circuit for the high-c oscillator. Diagram "A" places 105 volts DC on the 6AH6 and screen and full power supply voltage on the plate. Diagram "B" places 105 volts DC on both plate and screen. The plug (P_1) should be a Jones type S-304-CCT to match J_1 in FIG. 1. Resistor "R" should be a 10,000-ohm, 10-watt adjustable wire-wound type.

1958 EDISON AWARD RECIPIENT——K2KGJ

K2KGJ—JULIUS M. J. MADEY, *18, of Clark, N. J., is the recipient of General Electric's annual Edison Radio Amateur Award for public service in 1958.*

From this operating position (left), more than 12,000 messages have been handled for personnel at isolated Antarctic, Arctic and South Pacific bases. Madey devotes more than 90 hours weekly to this service, maintaining almost continuous contact with these outposts from mid-afternoon to 8 a.m. He has several times handled official Navy and Coast Guard messages, and arranged for hundreds of orders for flowers and gifts from isolated personnel to their families in the United States.

JUDGES:

E. Roland Harriman, Chairman, American National Red Cross.
Rosel H. Hyde, Commissioner, Federal Communications Commission.
Goodwin L. Dosland, President, American Radio Relay League.

MADEY'S NOMINATOR, Mayor Jay A. Stemmer of Clark Township, N. J., observes message-handling operations at K2KGJ. Stemmer had also nominated Julius for the 1956 and 1957 Edison Awards. Among nominating material submitted was a personal letter of appreciation to Madey from Rear Adm. George Dufek, commander, U. S. Naval support force, Antarctica.

FROM THIS 112-FOOT-HIGH rotary beam antenna radiates one of the most consistent signals heard by the Antarctic stations from U.S. amateur stations. Julius is at the top of the mast, while his younger brother (John, K2KGH), at base, provides relative comparison of antenna height. Their mother and father are hams, too, K2SPJ and K2SPI, respectively.

PRESENTATION OF TROPHY and $500 check was made to Madey by L. Berkley Davis (right), chairman of the Edison Award Council, and General Manager of G.E.'s Electronic Components Division, sponsors of the Award each year.

YOUNG MADEY acknowledges receipt of the Award at the presentation, held in Washington, D. C., on February 28, 1959. Attending were nearly two hundred prominent figures in the amateur, commercial, government and military communications fields.

CONGRATULATIONS ARE OFFERED Madey after the presentation by Reverend Daniel J. (Father Dan) Linehan, S.J. (left), principal speaker at the ceremony. Reverend Linehan, W1HWK, is chairman of the department of Geophysics at Boston College. During the period he spent in the Antarctic in connection with the International Geophysical Year, Father Dan talked with Madey many times over KC4USC.

SPECIAL CITATION RECIPIENTS

THREE RADIO AMATEURS *were awarded Special Citations by the 1958 Award judges. In addition to W4IYT and W7BA below, W6PIV, Kenneth M. Blaney, Sacramento, Calif., was cited for devoting 12 hours daily to message handling and contributing important data on observation of satellite radio signals to moonwatch observers.*

W4IYT—Andrew C. Clark, Miami Springs, Fla., receives news of his Edison Award Special Citation awarded for organizational service in the Florida weather reporting network, civil defense, Red Cross and youth training activities. Andy also is Editor of *FLORIDA SKIP*. Mrs. Clark—she's Betty, W4GGQ—and their seemingly bored junior operator share the good news.

W7BA—Loyd A. Peek, Seattle, Wash., received a Special Citation for transmitting a large volume of messages for overseas military personnel, participating in civil defense communications and serving the civilian Air Force and Army affiliate radio systems.

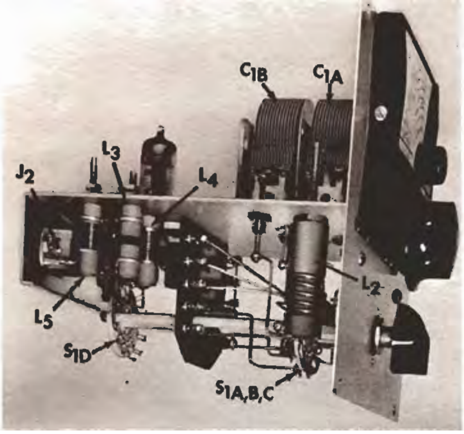

SIDE VIEW of the oscillator showing locations of major parts. Note that a 2-inch wide terminal board helps support the side rods and shaft of S_1. This model—also shown in its 6 x 6 x 6-inch utility box on page 1—has the Millen 10039 dial. The switch wafer behind L_2 is the 3-pole, 5-position switch, S_{1A}, S_{1B}, and S_{1C}.

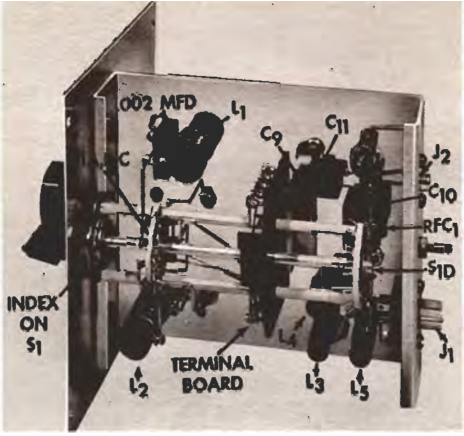

BOTTOM VIEW of the oscillator chassis showing assembly details of the bandswitch (S_1). The rear section of this switch (S_{1D}) connects the proper plate circuit coils for each band. Holes should be cut in the rear of the cabinet to provide access to the power plug (J_1) and r.f. output connector (J_2), as shown in the rear view on page 1.

BANDSWITCHING VFO

continued from page 3

A STANDARD CHASSIS and cabinet was used for both models of this VFO shown in the photos. The chassis—4⅞ x 5¾ x 1½ inches in size (Bud CB-1629 miniature aluminum chassis)—was tailor-made for the 6 x 6 x 6-inch aluminum utility box (Bud AU-1039) housing the VFO. When the whole assembly is fastened together with self-tapping screws—and a nut is tightened on the stud which protrudes through the cabinet rear plate—a surprisingly rigid structure results.

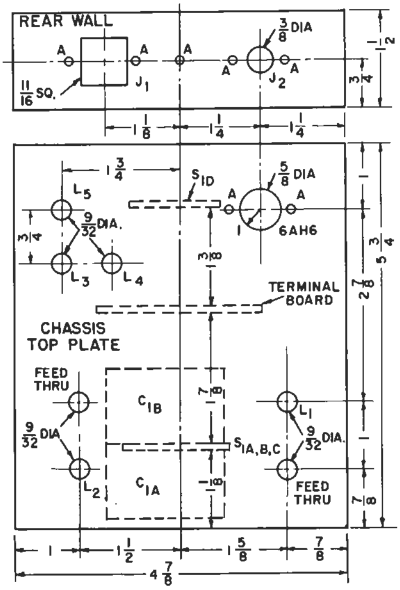

FIG. 3. CHASSIS DRILLING DIAGRAM for the high-c oscillator. The location shown for C_1 is for a Millen 10039 dial; it should be moved back 1 inch for a National SCN dial. Holes marked "A" should be drilled about ⅛ inch in diameter to clear No. 4 and No. 6 machine screws.

Locations of major parts are shown in the photos and the chassis drilling diagram, FIG. 3. Capacitors C_2 to C_8 were fastened to the terminal board which also supports the bandswitch; C_9, C_{10} and C_{11} were placed between the terminal board and the tube socket.

The location of the chassis on the panel will depend upon the type of tuning dial selected. The panel drilling diagram, FIG. 4, shows the hole locations and chassis position for two popular makes of dials. If another type of dial will be used on your model, first position the dial properly on the panel to find the shaft location for C_1. Then place the chassis at the height which permits the bottom of C_1 to rest on the chassis deck when the shaft lines up with the dial coupling.

FIRST CHECK THE WIRING before applying heater and plate power. Next, check between pin 1 (control grid) on the 6AH6 socket and the chassis with a vacuum-tube or high-resistance voltmeter (20,000 ohms per volt) to see if a reading of about minus 10 volts is observed. This indicates that the oscillator is working.

THE ALIGNMENT PROCEDURE to follow will provide nearly full-dial bandspread for all five amateur bands. It also compensates for variations in parts values and hand-wound coils. The low frequency band edges probably will not fall at the same point on the dial, but should be within a few divisions of each other. For precise calibration, use a well-calibrated receiver and a 100-kilocycle frequency standard. Mark frequencies every 50 or 100 kilocycles on the dial card after alignment.

3.5 TO 4.0 MEGACYCLES:

Set S_1 and turn C_1 to maximum capacitance. Turn the slug in L_1 until the oscillator frequency is about 3.510 megacycles. Turn C_1 to minimum. The oscillator frequency should be about 3.990 megacycles.

FRONT VIEW of the high-c oscillator constructed by K2IOW, employing the National type SCN dial. Exact calibration of the dial will depend upon the shape of the rotor plates in the variable capacitor actually used for C_1. Screened snap-in hole plugs in the cabinet top (see rear view on page 1) provide ventilation and access to the tuning adjustments on the slug-tuned coils.

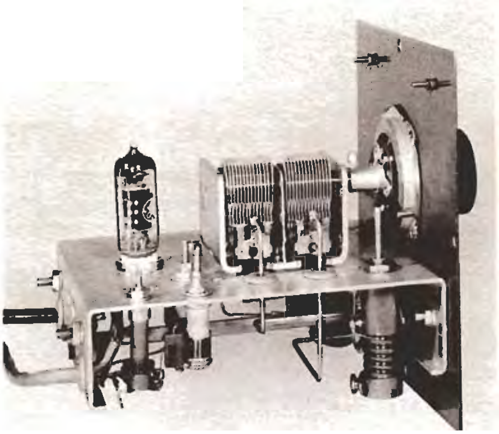

SIDE VIEW of the oscillator with the National SCN dial. Note that the tuning capacitor (C_1) has been moved back about an inch from the location shown in FIG. 3 to provide room for the planetary drive on this dial. No terminal board was used to hold the small silvered mica capacitors on this model; they were mounted directly on the front section of S_1.

7.0 TO 7.3 MEGACYCLES:

Do not disturb L_1. Set S_1 and turn C_1 to maximum. If the oscillator is below 7.0 megacycles, decrease size of C by changing the 50 mmf capacitor to 30 mmf; change to 70 mmf if the frequency is high. Turn C_1 to minimum and the oscillator should be near 7.3 megacycles. If high, reduce the value of C_4 to 450 mmf; or, if low, increase C_4 to 550 mmf. Again turn C_1 to maximum, recheck the oscillator at 7.0 megacycles and reduce or increase C_4.

14.0 TO 14.35 MEGACYCLES:

Set S_1 and turn C_1 to maximum. Adjust the oscillator frequency to 14.010 megacycles with slug in L_2. Turn C_1 to minimum and if frequency is higher than 14.350 megacycles, reduce C_2 to 100 mmf. Again turn C_1 to maximum and set oscillator to 14.010 megacycles with L_2. Finally, tune L_3 for maximum output at 14.35 megacycles.

21.0 TO 21.45 MEGACYCLES:

Set S_1 and turn C_1 to maximum. If the oscillator frequency is higher than 21.0 megacycles, increase C_7 to 330 mmf. Turn C_1 to minimum and if the oscillator frequency is higher than 21.450 megacycles, reduce C_3 to 90 mmf. Again turn C_1 to maximum and recheck oscillator at 21.0 megacycles. Finally, tune L_4 for maximum output at 21.25 megacycles.

28.0 TO 29.7 MEGACYCLES:

Do not disturb L_2. Set S_1 and turn C_1 to maximum. If the oscillator frequency is lower than 28.0 megacycles, reduce C_8 to 240 or 230 mmf. Turn C_1 to minimum and if the frequency is higher than 29.7 megacycles, reduce C_4 to 450 mmf. Again turn C_1 to maximum and check the oscillator at 28.0 megacycles. If the frequency is again too low, reduce C_8 to about 220 mmf. Do not disturb L_5.

Small air trimmer capacitors could be added across C_2 to C_8 to aid in the above adjustments, but mica insulated trimmers are not recommended. The oscillator as described is capable of maintaining good long-term calibration when quality components are used in its construction.

FIG. 4. PANEL LAYOUT diagrams for the high-c oscillator. Hole locations and chassis height for the Millen 10039 dial is shown at the left; those for the National SCN dial are at the right. The bandswitch (S_1) remains at the same location for either dial. The lip on the lower front edge of the chassis should be trimmed to clear the switch index plate.

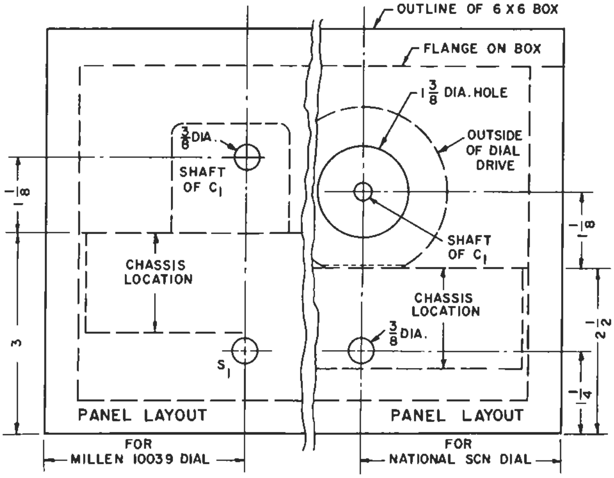

TECHNICAL INFORMATION—6L6-GC

Beam pentode for AF power amplifier applications

The 6L6-GC is a beam-power pentode primarily designed for use in audio-frequency power amplifier applications. Features of the tube include high power output capabilities, high plate and screen dissipation ratings, high efficiency, high power sensitivity, and low distortion. The 6L6-GC is unilaterally interchangeable with the 6L6-GB.

Comparative ratings with the 6L6-GB below indicate that the 6L6-GC features lower interelectrode capacitances, higher maximum plate and screen voltages, and higher plate and screen dissipation ratings.

ELECTRICAL DATA	6L6-GB	6L6-GC	
Cathode—Coated Unipotential	6.3	6.3	Volts
Heater Voltage, AC or DC	0.9	0.9	Amperes
Heater Current			
Direct Interelectrode Capacitances, approximate			
Grid-Number 1 to Plate	0.9	0.6	uuf
Input	11.5	10.0	uuf
Output	9.5	6.5	uuf
DESIGN-MAXIMUM RATINGS			
Plate Voltage	360	500	Volts
Screen Voltage	270	450	Volts
Plate Dissipation	19	30	Watts
Screen Dissipation	2.5	5.0	Watts
Heater-Cathode Voltage			
Heater Positive with Respect to Cathode	180	200	Volts
Heater Negative with Respect to Cathode	180	200	Volts
Grid-Number 1 Circuit Resistance			
With Fixed Bias	0.1	0.1	Megohms
With Cathode Bias	0.5	0.5	Megohms

BASING DIAGRAM

EIA 7AC

PHYSICAL DIMENSIONS

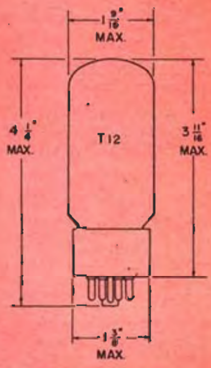

EIA 12-15

MARCH-APRIL, 1959

VOL. 14—NO. 2

Available FREE from your G-E Tube Distributor

HAM NEWS

E. A. Neal, W2JZK—Editor

published bi-monthly by

ELECTRONIC COMPONENTS DIVISION

GENERAL ELECTRIC

Schenectady 5, N. Y.

HAM NEWS

MAY–JUNE, 1959

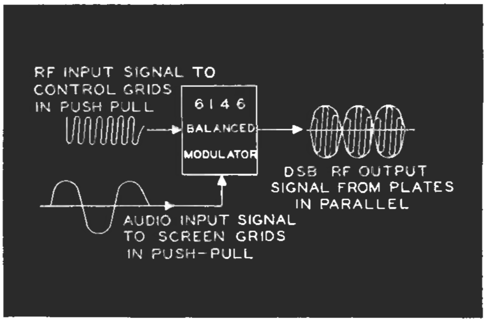

In This Issue . . .

200-watt

DOUBLE SIDEBANDER

Also—

Our DOUBLE SIDEBAND JUNIOR article a year ago sparked much interest in a more powerful double sideband transmitter with bandswitching. Now several radio amateurs at General Electric have combined their ideas in this transmitter with 200-watt peak power input capability from a pair of 6146 beam pentodes in the output stage. The complete circuit, and constructional details on the plug-in r.f. unit, is in this issue. Part II, in the July–August, 1959 issue, describes the main chassis containing audio system, power supplies and control circuits.

—*Lighthouse Larry*

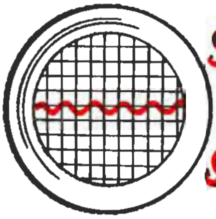

SCANNING the SPECTRUM

TALK ABOUT DX RECORDS—our tiny 7077 microminiature ceramic receiving tube has established a "universe record" for long-distance communications—407,000 miles!

And this was accomplished with milliwatts—not kilowatts—of r.f. power at 960.05 megacycles. A 7077 delivered 180 to 250 milliwatts as a class B final amplifier in the transmitter of the Pioneer IV satellite now hurtling in orbit about the sun. Strong signals from the transmitter were recorded for more than three days.

The 10- to 15-milliwatt transistorized exciter was thus amplified nearly 20-fold by the 7077, producing sufficient power to permit use of 960 megacycles for tracking and telemetering. This frequency is much less subject to bending and reflection by the Earth's ionized layers than 108 megacycles.

An exact duplicate of the record-breaking transmitter was displayed in General Electric's receiving tube exhibit at the 1959 IRE convention and show in New York City.

The 7077, first in a family of G-E ceramic receiving tubes, also is an excellent r.f. amplifier tube for the VHF and UHF amateur bands. See the January-February, 1959 issue of *G-E HAM NEWS* for details on r.f. amplifiers for 144 and 432 megacycles.

From one of our GADGET RACK[1] series authors comes the hint that a two- or three-foot extension cord is very handy for testing accessory units before installing them in the rack. Simply cut 11 lengths of the same types of wire shown for the bus-bar interconnecting system in the schematic diagram, solder them into an 11-pin male octal plug (Amphenol 86-PM11), and add an 11-pin female socket (Amphenol 78-PF11) on the other end. In fact, it's almost a necessity for aligning our CONEL MONITOR receiver[2]. If you're building a GADGET RACK, be sure and make the extension cord too.

FOR YOUR ELECTRONICS' BOOKSHELF . . .

Here's the latest in reference and instructional publications—packed with useful information for radio amateurs—which should be in your bookcase and the reference library at your local radio club.

THE RADIO AMATEUR'S HANDBOOK—The 36th edition of this volume—now well on its way toward a total of four million copies in thirty years—carries on the tradition of being the "amateur's Bible." All chapters in the book have been updated to include the latest in design and contructional techniques. Published by the American Radio Relay League, its reputation speaks for itself.

ALSO FROM A.R.R.L.—A second printing of the 8th edition of their ***Antenna Book*** includes the latest in mobile and beam antenna systems, in addition to comprehensive background information on antennas and transmission lines.

RADIO HANDBOOK—A completely new 15th edition of this renown handbook by William I. Orr, W6SAI, contains, in 800 pages, undoubtedly the most complete collection of constructional projects ever offered the radio amateur. This, of course, is in addition to chapters of technical background, excellent circuit design information on both basic and the latest techniques. And if you don't see exactly the gear you wish to build in the 15th edition, try looking in Bill's 14th edition. It's still available and has enough build-it-yourself data to last a lifetime.

FOR SIDEBANDERS—The ***New Sideband Handbook***, by Don Stoner, W6TNS, contains a wealth of information on both home constructed and commercial sideband equipment for radio amateurs. Much of the special circuitry from the commercial rigs is explained in detail, making it easy to incorporate these ideas into your own sideband rig. In short, it covers sideband from double down to single and back again!

A PAIR OF HANDBOOKS—Especially written for the newcomer to amateur radio, ***Building the Amateur Radio Station*** and ***Getting Started in Amateur Radio,*** these books are all-inclusive guides to their titular subjects. The author, Julius Benens, W2PIK, has described home-built receivers and transmitters, and some popular commercial amateur gear in the first book. The second volume contains complete instructions for learning the code and studying for Novice and General class amateur licenses. Twenty-seven pages of excerpts from the U.S. Communications Act of 1934 will answer virtually every question likely to arise concerning FCC regulations. Both books are published by the John F. Rider Publishers, Inc.

THE PUBLICATIONS described above should be available through book stores and many distributors of electronic components, including our G-E Tube distributors.

—*Lighthouse Larry*

---

[1] See G-E HAM NEWS, September-October, 1958 (Vol. 13 No. 5) and November-December, 1958 (Vol. 13, No. 6), for details.

[2] A 5-tube broadcast band receiver designed specifically for Conelrad monitoring service in the amateur station.

200-watt

DOUBLE SIDEBANDER

Part I

THIS DOUBLE SIDEBAND transmitter is packed with ingenious circuits and construction features. Try them!

THE DOUBLE SIDEBANDER was designed specifically for this mode of transmission; and, in fact, was a prototype for military double sideband and synchronous communications equipment. The frequency coverage is continuous from 2 to 30 megacycles in four bands. It has a peak power output, with sine-wave modulation, of 150 and 120 watts at 2 and 30 megacycles, respectively.

THE R.F. SECTION of the transmitter—a separately shielded and filtered unit—employs an oscillator-driver-final circuit arrangement as shown in the schematic diagram, FIG. 1. All transmitter stages are provided with protective bias to prevent damage to the tubes in the absence of excitation. In the oscillator and driver stages cathode self-bias give the necessary protection. The final stage protective circuit removes its high voltage if the r.f. drive fails.

Switch $S1_A$ in the grid circuit of the 6AH6 oscillator stage provides selection of one of the four crystals or the V.F.O. input as the frequency source. With $S1_A$ in the V.F.O. position the 6AH6 is employed as a Class A amplifier. An input from a V.F.O. of 0.5 to 1 volt r.m.s. will excite the driver stage.

All frequency multiplying is accomplished in the oscillator and the 6CL6 driver always operates as a straight amplifier. Since the pi network in the 6146 balanced modulator plate acts as a low-pass filter, sub-harmonics of the carrier frequency may appear in the transmitter output if the driver stage is operated as a frequency multiplier.

Careful circuit layout and complete r.f. bypassing stabilize the driver stage. The 15,000-ohm, 4-watt potentiometer ("PA GRID DRIVE") adjusts the 6CL6 screen voltage and, in turn, its r.f. power output.

The 6146 balanced modulator stage has the usual push-pull control grids, push-pull screen grids and paralleled plates described in several previous double sideband transmitter articles.[1] The pi-network plate circuit is designed for a 50-ohm output, but will load into impedances up to 300 ohms.

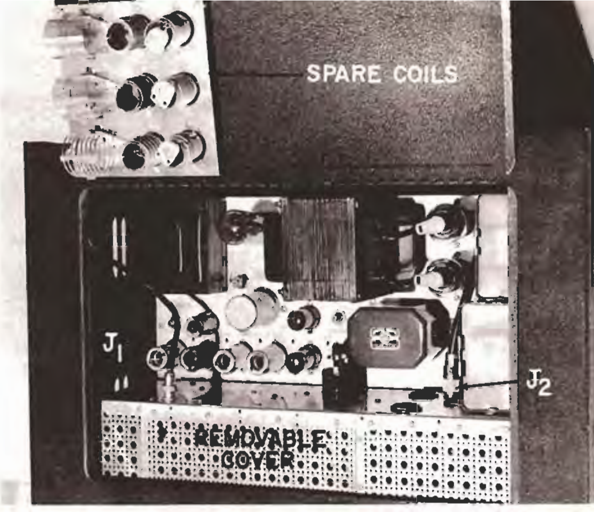

THE TRANSMITTER CABINET with the top lid open, showing the shielded r.f. compartment in the front, audio section in the middle and power supplied at the rear. Note the method of storing spare plug-in coils on an aluminum plate, on which 4 and 5-pin sockets have been mounted. Coils are changed in the exciter simply by removing four self-tapping screws which hold the shield at left-center in place.

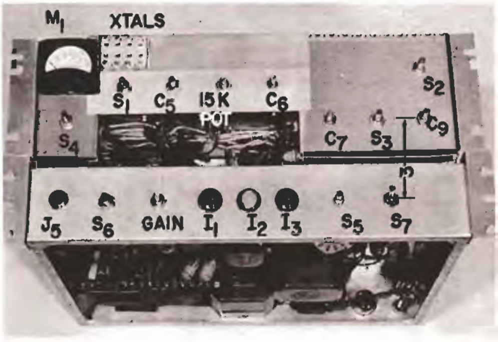

FRONT VIEW OF THE TRANSMITTER with cabinet and panel removed. The separate chassis containing the r.f. and metering section plugs into the main chassis, containing the remaining circuits.

THE MODULATOR SECTION is designed for use with a low-level, high-impedance microphone (crystal, ceramic, or dynamic). Low impedance microphones will require a matching transformer. The preamplifier stage (V_7) has a push-to-talk feature that cuts off the second section until closing the microphone switch greatly reduces the cathode bias. A twin diode tube (V_9) serves as an audio peak clipper. The next tube (V_8) is a matching device for the maxially-flat (Butterworth) L/C 3,000-cycle low-pass filter.

A 400-cycle phase-shift R/C sine wave oscillator (V_{10B}) and a split-load phase audio phase inverter (V_{10A}) precede the push-pull driver (V_{11}). The modulator tube (V_{12}) provides about 300 volts peak on each screen grid of the 6146 balanced modulator stage. About 8 decibels of inverse feedback in the driver and modulator stages improves balance and linearity in the 6146 stage.

(continued on page 6)

---

[1] See G-E *HAM NEWS*, March - April, 1959, for a bibliography of articles on double sideband techniques.

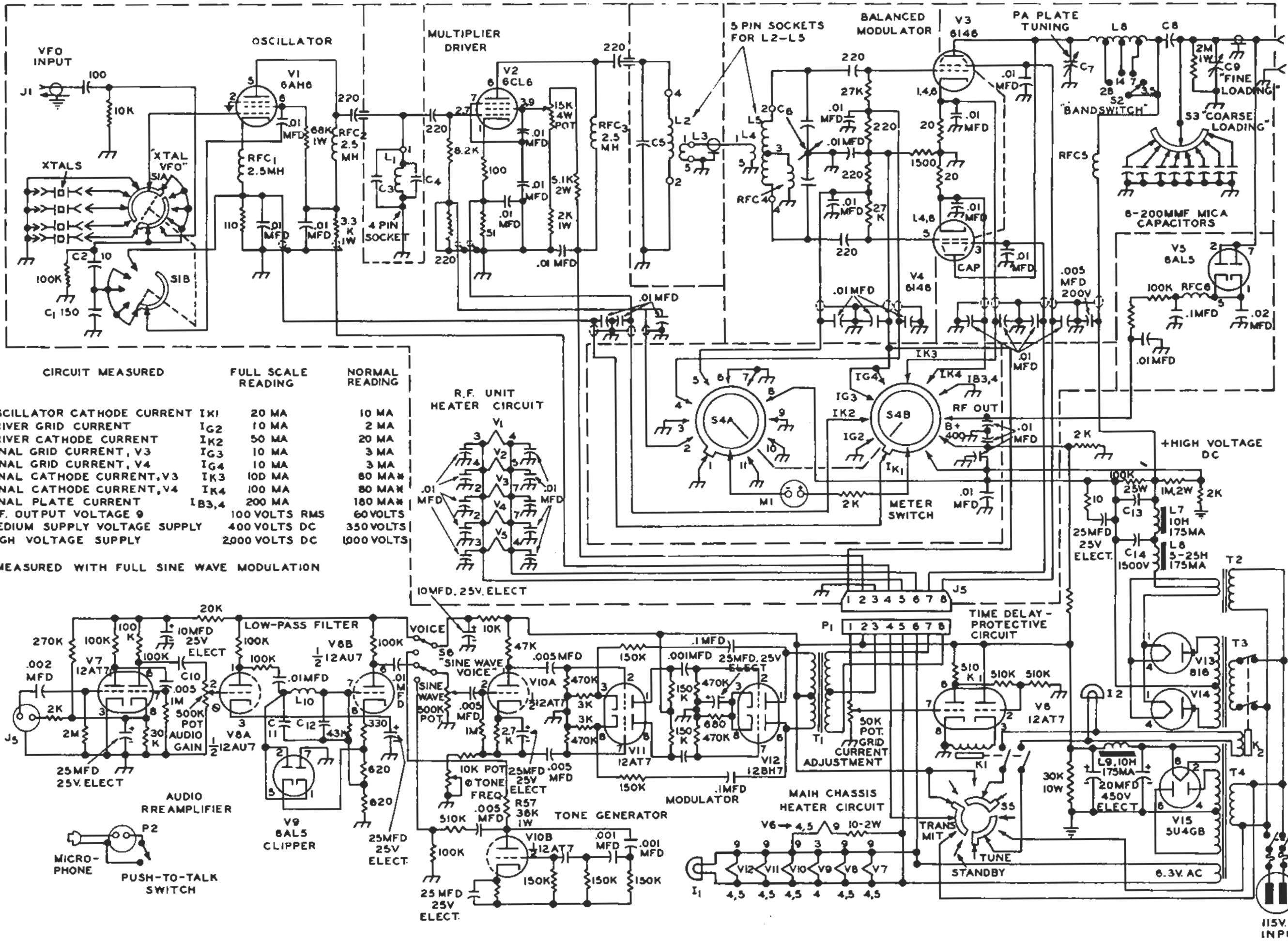

POSITION ON S4	CIRCUIT MEASURED		FULL SCALE READING	NORMAL READING
1	OSCILLATOR CATHODE CURRENT	I_{K1}	20 MA	10 MA
2	DRIVER GRID CURRENT	I_{G2}	10 MA	2 MA
3	DRIVER CATHODE CURRENT	I_{K2}	50 MA	20 MA
4	FINAL GRID CURRENT, V3	I_{G3}	10 MA	3 MA
5	FINAL GRID CURRENT, V4	I_{G4}	10 MA	3 MA
6	FINAL CATHODE CURRENT, V3	I_{K3}	100 MA	80 MA*
7	FINAL CATHODE CURRENT, V4	I_{K4}	100 MA	80 MA*
8	FINAL PLATE CURRENT	$I_{B3,4}$	200 MA	180 MA*
9	R.F. OUTPUT VOLTAGE 9		100 VOLTS RMS	60 VOLTS
10	MEDIUM SUPPLY VOLTAGE SUPPLY		400 VOLTS DC	350 VOLTS
11	HIGH VOLTAGE SUPPLY		2,000 VOLTS DC	1,000 VOLTS

*MEASURED WITH FULL SINE WAVE MODULATION

PARTS LIST—200 WATT DOUBLE SIDEBANDER

C_1 . . . 150-mmf mica, 500-volt rating.
C_2 . . . 10-mmf mica, 500 volt (change value if crystal is erratic).
C_3 . . . 500-volt, 10 percent mica mounted in L_1; (See coil table for values).
C_4 . . . 3—30-mmf midget ceramic trimmers mounted on L_1.
C_5 . . . 6—142-mmf variable, 0.020-inch air gap (Hammarlund HFA-140-A).
C_6 . . . 6—142-mmf per section, 2-section variable (Hammarlund HFD-140).
C_7 . . . 10—200-mmf variable, 0.024-inch air gap (Hammarlund MC-200-M).
C_8 . . . 0.001-mfd, 2500-volt mica (0.001-mfd, 5000-volt ceramic also suitable).
C_9 . . . 13.5—325-mmf air variable, 0.24-inch air gap (Hammarlund MC-325-M).
C_{10} . . . 82-mmf, 500-volt mica (Change value to suit audio response).
C_{11} . . . 0.0018-mfd, 500-volt mica (Value determines cutoff frequency of filter).
C_{12} . . . 620-mmf, 500-volt mica (Value determines cutoff freqeuncy of filter).
C_{13}, C_{14} . . . 8-mfd, 1500-volt oil-filled paper capacitors.
F_1, F_2 . . . 5-ampere type AGC fuses and holders.
I_1 . . . 6.3-volt pilot lamp and jeweled bracket.
I_2 . . . 115-volt pilot lamp and jeweled bracket.
J_1, J_2 . . . chassis type coaxial cable connectors (SO-239).
J_3 . . . chassis type 2-pin recessed male power connector.
J_4 . . . chassis type 8-pin male power connector (Jones P-308-AB).
J_5 . . . chassis type 2-pin female microphone connector (Amphenol 80-PC2F).
K_1 . . . 2-pole, 2 position sensitive relay, 2-ampere contacts, 10,000-ohm coil with 3- to 5-ma energizing current (Potter & Brumfield LM-11 or KCP-11).
K_2 . . . 2-pole, 2-position power relay, 5-ampere contacts, 115-volt, 60-cycle coil.
L_7, L_9 . . . 10 henry, 175-milliampere smoothing filter choke.
L_8 . . . 5—25 henry, 175-milliampere swinging filter choke.
L_{10} . . . 3 henry, iron core inductance (toroidal type core preferable).
M_1 . . . 0—1-milliampere panel meter, 2½ inches square (G.E. DW-71 or DW-91).
P_1 . . . 8-pin cable type female power connector (Jones S-308-CCT).
RFC_1, RFC_2, RFC_3, RFC_4 . . . 2.5-mh, 100-ma r.f. choke (National R-100).
RFC_5 . . . 2.5-mh, 300-ma r.f. choke (National R-300 or equivalent).
S_1 . . . 3-pole, 5-position, 2-section ceramic rotary tap switch (Centralab 2515).
S_2 . . . 1-pole, 4-position, 1-section 90-degree ceramic-insulated rotary tap switch, (Centralab No. 2542 or equivalent).
S_3 . . . 1-pole, 10-position, 1-section, progressive shorting ceramic-insulated rotary tap switch (Centralab P1-S wafer and P-121 index assembly).
S_4 . . . 2-pole, 11-position, 2-section rotary tap switch (Centralab 1413).
S_5 . . . 3-pole, 3-position, 1-section rotary tap switch (Centralab 1407).
S_6 . . . 2-pole, 2-position, 1-section rotary tap switch (Centralab 3122J).
S_7 . . . 2-pole, 2-position heavy duty toggle switch.
T_1 . . . audio driver transformer; turns ratio, primary to ½ secondary: 4 to 5. (Use primary of transformer as secondary in this application.)
T_2 . . . filament transformer: secondary, 2.5 volts at 5 amperes; 115-volt primary.
T_3 . . . plate transformer: 2400 volts, center tapped at 150 ma; 115-volt primary.
T_4 . . . power transformer: secondaries, 700 volts center tapped at 150 ma; 5 volts at 3 amperes; 6.3 volts at 6 amperes; 115-volt primary.

FIG. 1. COMPLETE SCHEMATIC DIAGRAM of the 200-watt double sideband transmitter. The r.f. circuit runs across the top of the diagram, with the meter switching circuit below it. The audio system is at the lower left and the power supplies at the lower right. The 12AT7 time delay-protective tube is just to the left of the power supplies.

All capacitances are in mmf, except where otherwise specified. All r.f. coupling capacitors and the 200-mmf mica capacitors on S_3 are micas. All 0.01-mfd bypass capacitors are disc ceramic, 1000 volts working, unless otherwise noted. Resistances are in ohms (K=1000; MEG=1,000,000), ½-watt power rating, unless a higher rating is specified.

Data for winding all the r.f. coils (L_1 to L_6) appears in the COIL TABLE below. The tube types for V_1 to V_{15} appear on the diagram. Shielded wires are indicated by dotted loops encircling the wire. Shielding around r.f. circuitry is shown in dashed lines.

TABLE I—COIL WINDING DATA

NOTE: All coils are wound with tinned copper wire in the sizes specified below.
L_1 . . . wound on 1-inch diameter, 4-pin plug-in forms. Winding length is 1 inch. Capacitors C_3 and C_4 are mounted inside each coil form.
L_2 . . . wound on 1-inch diameter, 5-pin plug-in forms. Winding length is 1 inch. Link coil L_3 wound at grounded end of L_2 on each form.
L_4, L_5 . . . B & W "Baby" inductors, center tapped with center link coils, and 5-pin base.
L_6 . . . 10.5 uh total, 28 turns 1½ inches in diameter, 4 inches long. Wound with 22 turns of No. 12 (7 turns per inch) and 6 turns of No. 10 (5 turns per inch) tinned copper wire, tapped at 6, 9 and 15 turns from the end with No. 10 wire.

	L_1 and L_2			L_2 Only		L_1	L_4 & L_5	L_3 Output Coil	
Band, MC	Ind., uh.	Turns	Wire Size	Turns, L_3	Wire Size	C_3 mmf.	B & W Number	Turns in Use	Ind., uh.
3.5	17.4	31	24	3	16	82	80MCL-2925	28	10.5
7	4.6	16	18	3	16	68	40MCL-2924	15	5
14	1.4	8	16	2	14	56	20MCL-2923	9	2.4
21[1]	0.75	6	16	—	—	39	——	—	—
28	0.45	4	14	2	14	27	10MCL-2921	6	1.3

[1] 28-megacycle coils tune to the 21-megacycle band. A separate 21-megacycle oscillator coil (L_1) is required only when crystals oscillating at this frequency, or a VFO having output at 21 megacycles, are used with transmitter.

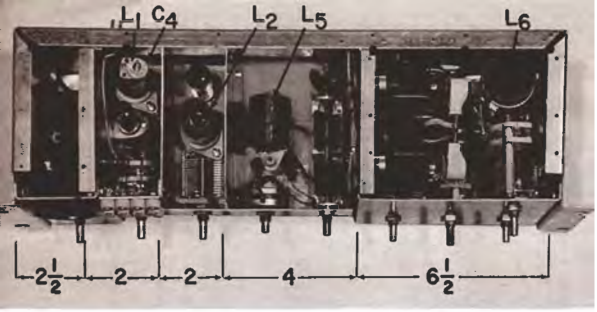

TOP VIEW of the r.f. unit with shield covers removed. Note shielding partitions between stages and horizontal mounting of 6146 tubes on shield to isolate grid and plate circuits in the balanced modulator output stage. Main chassis is a 5¼-inch high panel chassis designed for relay rack mounting (Bud CB-1372, or equivalent.

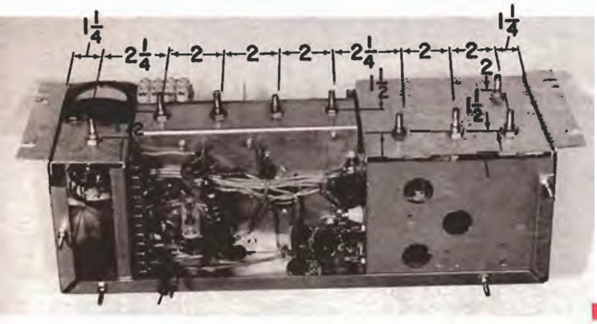

BOTTOM VIEW of the r.f. unit. The four banana plugs on the lower rim of the chassis plug into matching jacks on the main chassis. High voltage for the 6146's enters the r.f. unit via a Millen 37001 high voltage connector and the white feed-through insulator on the 6146 compartment shield. The phone-tip jack at the lower left is for plate voltage to the oscillator. Two phono plugs, connected to the row of feedthrough terminals on the meter compartment, are for the 400 and 2000-volt metering circuits. Note the liberal use of 0.01-mfd disc ceramics bypass capacitors and shielded wire for the power and metering circuits.

DOUBLE SIDEBANDER

(continued from page 3)

Both power supplies are of conventional design. The high voltage supply is rated at 1000 volts DC at 145 milliamperes; and the low voltage supply delivers 360 volts DC at 110 milliamperes, both continuous duty.

ADDITIONAL CIRCUITRY on the schematic diagram includes the power supply time delay and 6146 protective circuit. A 10-ohm resistor in series with the heater to this tube (V_6) increases its heating time. This prevents application of high voltage to the 816 mercury vapor rectifiers (V_{13} and V_{14}) for 30 seconds and allows their filaments to reach operating temperature.

When no r.f. drive is applied to the 6146's the left-hand triode of V_6 has no negative bias and draws sufficient plate current through its 500,000-ohm plate resistor to nearly cut off plate current in the right-hand triode. Application of sufficient r.f. drive to the 6146's reduces plate current flow in the left-hand section of V_6. This swings the grid of the right-hand section more positive, resulting in increased plate current flow which energizes relay K_1. This in turn energizes K_2, if S_5 is in the "TRANSMIT" position, and applies primary voltage to T_3.

METERING OF ELEVEN CIRCUITS in the transmitter is accomplished with a single 0–1-milliampere meter (M_1) and the meter switch (S_4). Switch positions—and the full-scale current or voltage reading in each position—are listed on the schematic diagram. The meter measures current by reading the voltage drop (2 volts for full-scale reading) across resistances in series with the various grid and cathode circuits.

Tube V_5 and its circuitry form a peak detector for measuring the r.f. output voltage of the transmitter. Since the meter reads 0.707 of the peak voltage, the average r.f. power output with sine-wave modulation can be calculated, if the transmitter is operated into a non-reactive load of known impedance.

MECHANICAL LAYOUT of the r.f. unit can be determined from the pictures and explanations accompanying them. Locations of the major components and approximate dimensions have been marked on each view. The usual modern r.f. construction practices have been followed: shielding, both over-all and between stages; shielded wire for all power and metering circuit connections; liberal use of bypass capacitors, etc.

Locations of the holes for the four banana plugs, shown in the bottom view, should be marked on the main chassis to insure proper alignment. Partitions and subchassis can be fastened in place with self-tapping screws; this is much easier than attempting assembly of nuts on machine screws in tight corners! The oscillator tube sits on a small angle bracket fastened to the partition between that stage and the metering compartment.

The oscillator plug-in coils (L_1) are assembled by first soldering two lengths of No. 14 tinned wire into pins 1 and 4 before winding the coil. Next the coil leads and C_3 are soldered to the wires. Finally, C_4 is soldered to the wires at the open end of the form.

TUNE-UP AND OPERATION will be described in this issue—since frequent reference is made to the schematic diagram—even though constructional details for the main chassis will be covered in the next issue. (In other words, we're tuning up the rig before you've finished building it—Ed.) The procedure is similar to any transmitter having class C amplifiers, with one exception: It is necessary to modulate the 6146 stage to obtain r.f. output.

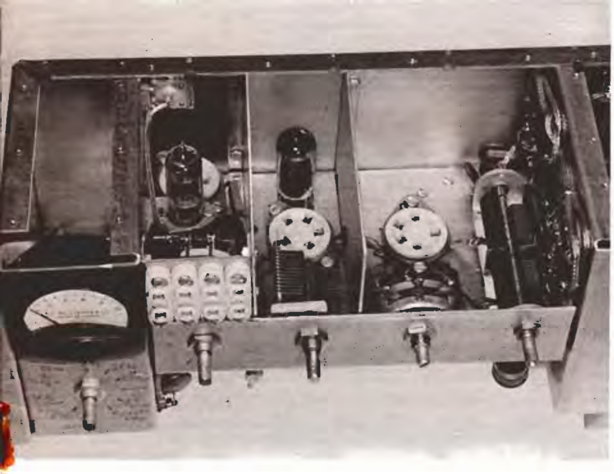

DETAIL VIEW of the wiring around the 6146 balanced modulator tube sockets. The standard technique of bypassing the ends of shielded wire has been used. The 6146 plate caps were joined with No. 12 tinned wire, then connected with thin copper strips to the circuit components shown in the schematic diagram, FIG. 1.

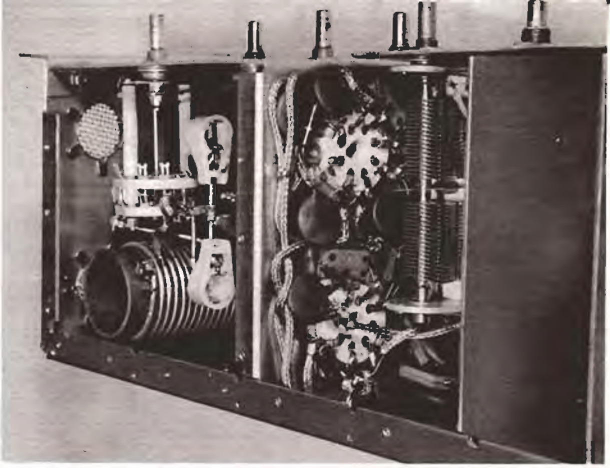

EXCITER COMPARTMENTS in the r.f. unit. Plug-in coils have been removed to show the coil sockets mounted on metal pillars ¾ of an inch high. All partitions and shelves were fabricated from 1/16-inch thick soft sheet aluminum. The crystal sockets were mounted on a bracket drilled to match the socket holes.

After the usual check to see that all circuits have been wired correctly, plug in the power cord, the set of coils for the desired amateur band and turn the pi-network bandswitch (S_2) to the same position. Insert a crystal of proper frequency, or connect a stable VFO to J_1 and turn S_1 to the proper position. Connect a microphone to J_5 and a 50-ohm dummy antenna load to J_2.

Turn S_7 to the "ON" position and S_5 to the "TUNE" position. With S_4 in position 2, tune C_4 (on the oscillator coil form) with a screwdriver until about 2 to 3 milliamperes of grid current is indicated in the driver stage. Detune this capacitor slightly if the grid current exceeds 4 milliamperes.

Next, turn S_4 to position 3 and tune C_5 for a dip in driver cathode current. Turn S_4 to positions 4 and 5, and adjust C_6 for maximum grid current in the 6146 balanced modulator. Adjust the "PA GRID DRIVE" control for a reading of 3 milliamperes in each 6146. Now, turn the "GRID CURRENT ADJUSTMENT" potentiometer until relays K_1 and K_2 energize, as indicated by I_2 lighting. Turn the "PA GRID DRIVE" control until the 6146 grid current decreases to 2 milliamperes and again adjust the "GRID CURRENT ADJUSTMENT" until K_1 and K_2 open. The 6146 protective circuit is now adjusted.

To tune up the 6146 balanced modulator, set S_4 on position 6, S_5 on "TRANSMIT" and S_6 on "SINE WAVE." Advance the "MOD. LEVEL" potentiometer (on main chassis) until the 6146 cathode current meter reading increases to 30 milliamperes. Tune C_7 for a dip in plate current. Turn S_4 to position 9 and adjust the "COARSE LOADING" (S_8) and "FINE LOADING" (C_9) controls for maximum output voltage on the meter. Readjust C_7 as necessary for maximum output.

Further advance the "MOD. LEVEL" control slowly to the setting at which little further increase in power output is indicated on the meter. Note this meter reading at which the balanced modulator begins to "flatten out." Next, turn S_6 to the "VOICE" position and adjust the "MOD. LEVEL" control, while talking or whistling into the microphone, until the *peak* output voltage reading on the meter reaches the maximum level noted with sine wave modulation.

Adjustment of the "AUDIO GAIN" and "CLIPPING LEVEL" controls is best made while listening to the transmitter signal, in addition to checking it for flattening of peaks on an oscilloscope. Too much clipping will introduce serious distortion. The "AUDIO GAIN" control setting will depend upon the sensitivity of the microphone and amount of room background noise in the shack.

(Part II will appear in the July-August, 1959 issue.)

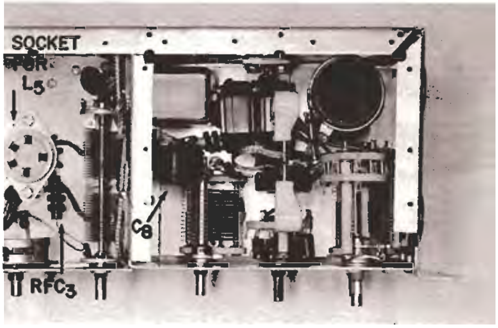

TOP VIEW of the 6146 compartment showing the positions of smaller components near the switches, capacitors and coils. The bandswitch, S_2, was modified by adding longer side rods and spacers to shorten the connections to L_6. This compartment was assembled before being fastened to the main r.f. chassis.

7-FOOT G-E TUBE

At 1959 IRE Show

Many radio amateurs were intrigued by this *king-size* "miniature" tube—7 feet tall and 4 feet in diameter—at the 1959 IRE convention and electronics show last March at the New York Coliseum. The tube—actually a display of six basic demonstrations of the outstanding characteristics of receiving tubes—was part of General Electric's receiving tube exhibit at the show.

Based on the theme, "Tubes Do the Tough Jobs," the demonstrations included: *High temperature tubes*—An all-ceramic tube 15-watt audio amplifier featuring types being developed to withstand temperatures of 300 degrees centigrade, and termed "the hottest little Hi-Fi in town" (left); *High power tubes*—A pair of latest type power output tubes—6L6-GC's—delivering 55 watts output in class AB_1 audio amplifier service, with less than 2 percent total harmonic distortion (right).

The other four demonstrations were based on receiving tube reliability, high frequency performance, high voltage capability and uniformity. Viewers could actuate each display with handy controls.

HAM NEWS

Available FREE from your G-E Tube Distributor

MAY–JUNE, 1959

VOL. 14—NO. 3

Copyright, 1959, General Electric Co.

E. A. Neal, W2JZK—Editor

BUILD-IT-YOURSELF IDEAS
from the 999 radio amateurs at
GENERAL ELECTRIC

published bi-monthly by
RECEIVING TUBE DEPARTMENT
Owensboro, Ky.

HAM NEWS

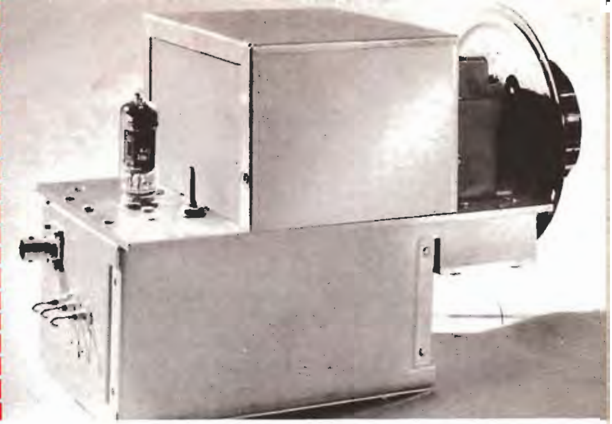

JULY–AUGUST, 1959

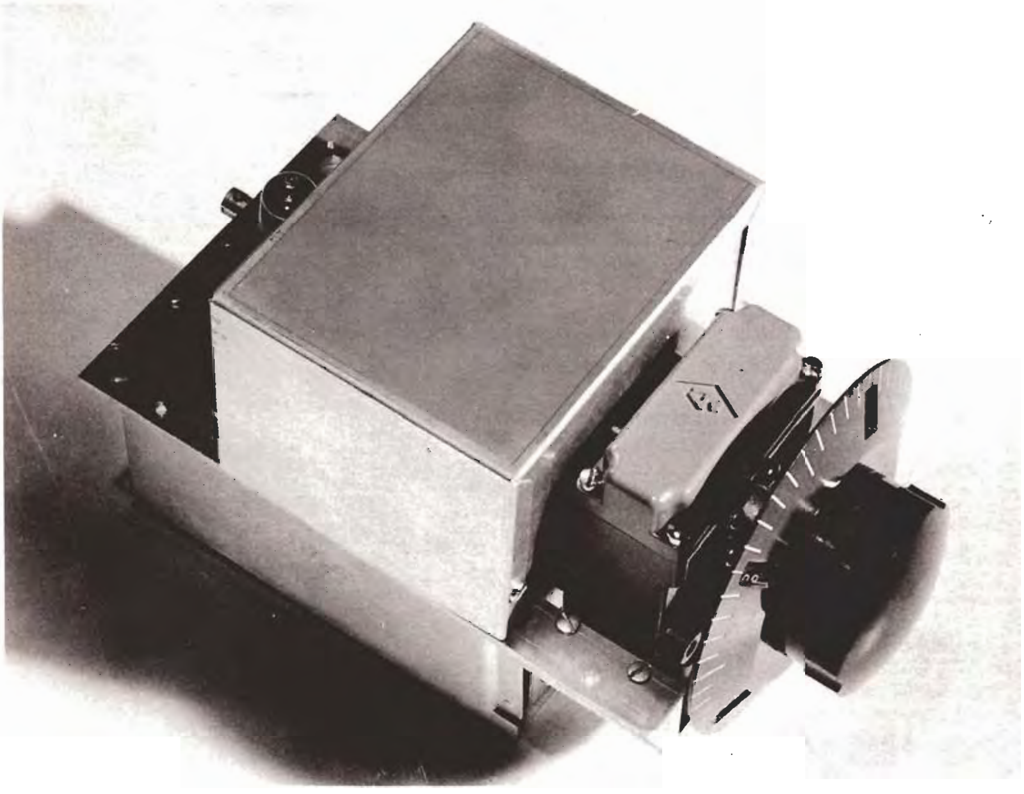

In this issue . . . . **SOLID HIGH-C VFO**

. . . . . . *page 3*

Here's a double feature issue—with Part II of our 200-watt DOUBLE SIDEBANDER; and—in response to many requests—details on constructing a solid high-C VFO for the popular amateur frequency ranges.

—Lighthouse Larry

Also—

SCANNING the SPECTRUM

MEET THE DESIGNER . . .

W2FBS—Sam Johnson, needed a stable, tunable oscillator covering a single frequency range for the new heterodyne exciter he was building for his station. Having seen first hand the fine results obtained by ex-W2FZW (now K7BGI) with his high-C oscillator circuits for our 150-watt single band transmitters[1], Sam packaged his high-C circuit like the proverbial battleship. (See the cover photos and description starting on page 3.)

A long-time DX chaser with 230-odd countries confirmed, Sam can be heard almost daily on the CW DX bands, seeking new rare countries. W2FBS, incidentally, provided the technical guidance for our SPECIAL DX LOG ISSUE last year; also the 1959 supplement in this issue.

Vocationally, Sam is a mechanical engineer with General Electric's Gas Turbine Department at our king-sized manufacturing plant in Schenectady, N. Y.

After Sam's heterodyne exciter has a bit more mileage on it—and countries too—we'll bring you the details in a future issue.

---

[1] See G-E HAM NEWS, November-December, 1957 (Vol. 12, No. 6) for details on this oscillator and transmitter.

COMING NEXT ISSUE . . .

The photo below is an operator's eye view of K2IOW's Compact Triode Kilowatt featured in a special 12-page September-October, 1959 issue. We promised you this fine article in the March-April issue in which Bob's bandswitching VFO appeared.

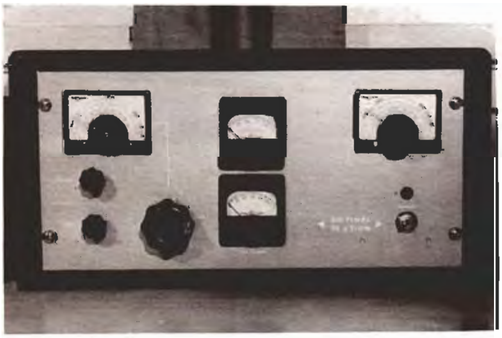

a new concept in electronic tubes and circuits

TIMMS

(Thermionic Integrated Micro Modules)

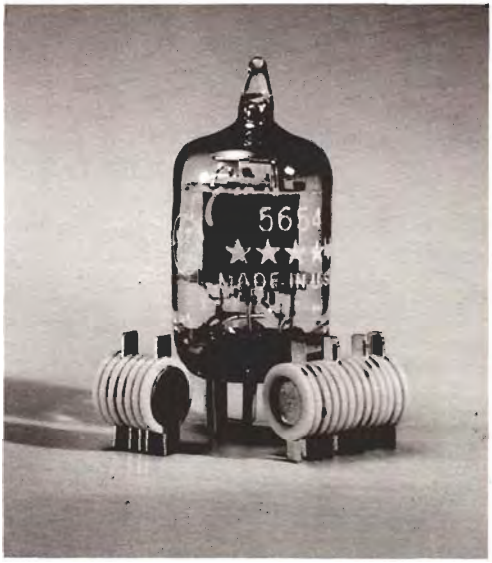

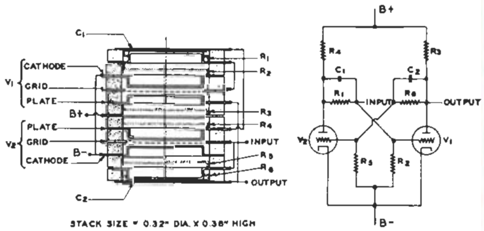

STACK SIZE = 0.32" DIA. X 0.38" HIGH
SPACE OCCUPIED BY 10 COMPONENTS = 0.04" CUBIC INCH

CROSS-SECTION AND SCHEMATIC DIAGRAM OF TYPICAL TIMM

Amateur radio gear may be literally ***red hot*** in the future if TIMMS, as pictured above, are employed in its construction.

TIMMS circuits are a new concept of self-heating combination of heaterless electronic tubes, resistors, capacitors and other parts fabricated into stacks, shown above.

A complete circuit, such as the multivibrator in the sketch, occupies a space no larger than a pencil eraser. Once heated initially, the circuit generates its own operating temperature of 580 degrees C.

TIMMS are not yet commercially available, but if you'd like more information, we'll send you a bulletin describing them.

—*Lighthouse Larry*

SOLID HIGH-C VFO

CHOOSE YOUR TUNING RANGE *and build this completely shielded, stable oscillator for your new multiplying type, or heterodyne type, exciter.*

There's a great many possible combinations of frequency-determining components for the high-C oscillator circuit. Several ranges for the popular amateur frequencies are covered here, along with constructional details for variable frequency oscillators with excellent mechanical rigidity. The oscillator shown was designed to be mounted in a hole cut in a larger chassis, with a rubber bushing under each corner.

The basic circuit, shown in the schematic diagram, FIG. 1, is essentially similar to our

(Continued on page 4)

TABLE I: PARTS LIST

C_1 . . . air variable with front and rear rotor bearings; see TABLE II for capacitance values (Bud or Hammarlund "MC" or Johnson "R" series).
C_2, C_3. silvered mica or zero-temperature; see TABLE II, for capacitance values.
C_4 . . . silvered mica; 100 mmf above 5 megacycles in grid circuit; 200 mmf below 5 megacycles.
C_5 . . . 100-mmf silvered mica (use only for capacitive coupled output circuit).
C_3 . . . silvered mica; see TABLE II for values.
J_1 . . . chassis type coaxial cable connector.
L_1 . . . coils 1 inch long, wound on ½-inch diameter ceramic iron-slug tuned coil forms 2½ inches long (CTC LS-7, or PLS7-2C4L); see TABLE II for inductance values and turns.
L_2 . . . CTC LS-3 ready-wound coils; or, wound on same forms as L_1; see TABLE II. Wind 2-turn coil over L_2 for link.
RFC_1 . pi-wound r.f. choke, 2.5 mh below 5 megacycles, 1 mh above 5 megacycles (National R-50, or equivalent).

TABLE II—TUNED CIRCUIT COMPONENT VALUES

FREQUENCY RANGE		CAPACITORS			COILS—WINDING LENGTH = 1 INCH			
"A" (MC)	"B" (MC)	C_1 (mmf)	C_2, C_3 (mfd)	C_6 (mmf)	L_1 (uh)	TURNS	L_2 (uh)	TURNS
1.75—1.88	3.5— 3.76	15—300	0.004	30	3.0	18	30—70	CTC LS-3 5-MC Coil
3.5 —4.0	3.5— 4.0	15—300	0.002	30	1.6	12	30—70	CTC LS-3 5-MC Coil
5.0 —5.5	5.0— 5.5	10—230	0.002	20	0.9	9	30—70	CTC LS-3 5-MC Coil
3.5 —3.75	7.0— 7.5	10—230	0.0025	50	1.3	11	6—13	CTC LS-3 10-MC Coil
3.5 —3.72	7.0— 7.44	15—300	0.004	50	0.9	9	6—13	CTC LS-3 10-MC Coil
6.0 —6.5	6.0— 6.5	10—200	0.002	20	0.6	7	14—20	44 on LS-7 Coil Form
6.0 —6.25	12.0—12.5*	8—140	0.0025	20	0.5	6	5— 9	22 on LS-7 Coil Form
7.0 —7.2	14.0—14.4	8—140	0.002	20	0.5	6	4— 8	19 on LS-7 Coil Form
8.0 —8.22	24.0—24.66	6—100	0.002	60	0.35	5	0.5—1.0	CTC LS-3 30-MC Coil
8.33—8.66	25.0—26.0	6—100	0.002	60	0.35	5	0.5—1.0	CTC LS-3 30-MC Coil

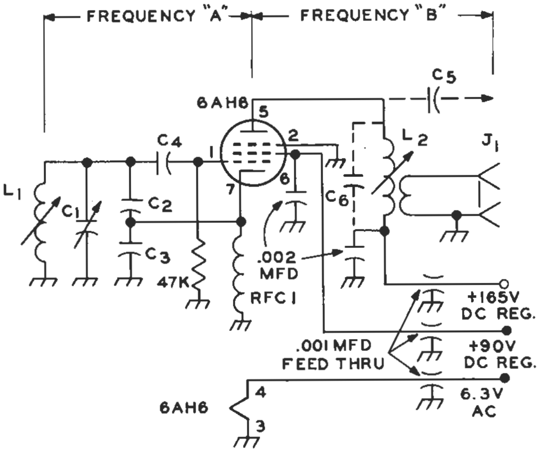

FIG. 1. SCHEMATIC DIAGRAM of the high-C variable frequency oscillator. Components required to cover a given frequency range are listed in TABLE II. All capacitances are in mmf, unless otherwise specified. All resistances are in ohms, ½ watt (K = 1000). Use either link coupling (L_2 and J_1) for the output; or capacitive coupling with C_5, depending on the driving requirements of succeeding stage.

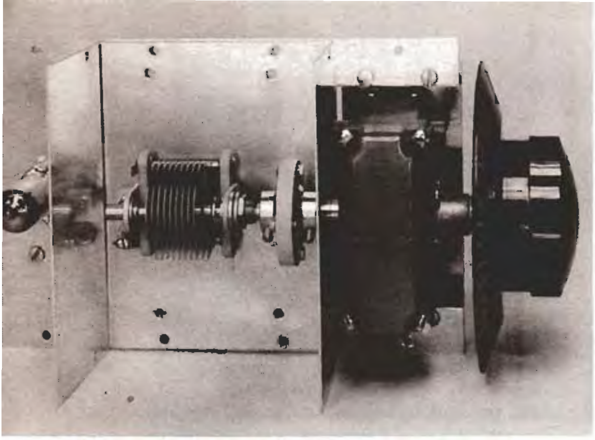

TOP VIEW of the oscillator with shield box over the tuning capacitor removed. Note how gear box on NPW dial fits into step-down shelf on chassis plate, permitting the dial shaft to line up with capacitor shaft. No spacers are used under feet on capacitor.

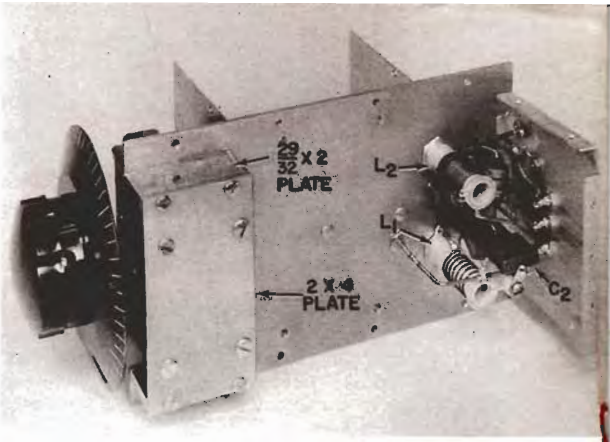

BOTTOM VIEW of the oscillator with bottom plate and side plates removed. The ceramic pillars for mounting C_2 and C_3 (see detail, FIG. 3) are just behind L_1. The 0.001-mfd feedthrough capacitors for power connections are on the rear wall plate.

SOLID HIGH-C VFO

(Continued from page 3)

original high-C circuit (See "Technical Tidbits, High-C Oscillators," *G-E HAM NEWS*, November-December, 1957 Vol. 12, No. 6). Capacitors C_2 and C_3 form an r.f. voltage divider for feedback and also are in series across L_1 for determining the frequency of oscillation. The capacitance range of C_1 determines the frequency coverage.

A 6AH6 miniature pentode was chosen as the oscillator tube because of its high transconductance. The plate circuit (C_6—L_2) is usually tuned to the second harmonic of the grid circuit to lessen interaction caused by changes in load on the oscillator output. Details on the critical components are given in TABLE I. A choice of component values for suggested tuning ranges is listed in TABLE II.

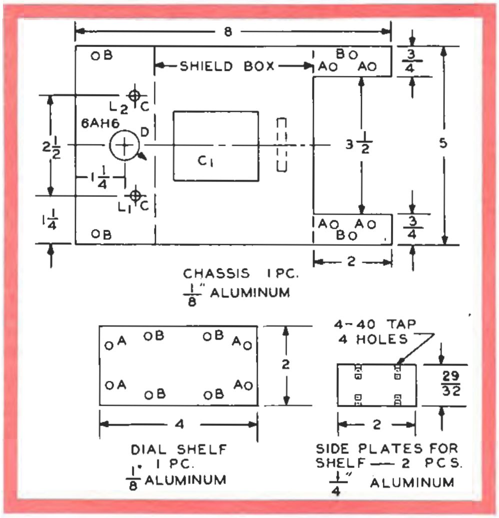

FIG. 2. DRILLING DIAGRAM for the chassis plate, and dial shelf plates. Holes marked "A" were made with No. 32 drill; "B" with No. 27 drill; "C" with 9/32-inch diameter drill; and "D" with a ⅝-inch diameter socket punch.

This particular oscillator was designed to cover an output tuning range of from 12.0 to 12.5 megacycles, a range of 500 kilocycles. With the National type NPW dial calibrated from 0 to 500, a tuning rate of about 1 kilocycle per dial division was achieved. However, the tuning rate was not precisely linear. A well-calibrated, smooth running tuning dial should be used on this—or any—VFO.

HIGH QUALITY insulation—steatite or ceramic—should be on the components selected for the oscillator wherever possible. This helps reduce frequency drift. The oscillator grid coil (L_1) had a measured "Q" of over 200 on the coil form specified, in spite of the small diameter.

CONSTRUCTIONAL DETAILS are covered in the photos and the drilling diagram for the chassis plate and shelf, FIG. 2. The shield box for C_1 is a 3 x 4 x 5-inch Minibox (***Bud*** CU-30). The shield under the chassis plate was made from ***See-Zak*** aluminum expandable chassis parts. The front and rear side rails are ***See-Zak*** R-34 (3 inches high, 4 inches long). A ***See-Zak*** P-44 chassis plate forms the bottom cover. Hole locations in the chassis plate for this shield should be marked from the shield parts.

A special mounting, as shown in the detail drawing, FIG. 3, was made for C_2 and C_3. This assembly is located next to L_1, as shown in the bottom view. The three 0.001-mfd feedthrough capacitors for the power leads, and the r.f. output connector, (J_2), mount on the rear side rail. The power leads and link on L_2 were made with insulated hookup wire; tinned No. 12 bus wire was used for r.f. leads.

TUNEUP consists simply of adjusting the tuning slug in L_1 so that the desired tuning range is covered. A specific frequency at either the lower or upper end of the tuning range may be

(Continued on page 7)

200-watt

DOUBLE SIDEBANDER

Part II

CONSTRUCTIONAL DETAILS *of the main chassis, and more operational data, are contained in the conclusion of this article on the latest in communication media.*

The audio amplifier-modulator, control circuitry and power supplies for the 200-watt double sideband transmitter were constructed on a single 13 x 17 x 3-inch deep chassis (*Bud* AC-4, or equivalent). If the constructor desires, the power supplies could be built on a separate chassis—say 6 x 17 x 3 inches in size and attached in back of a 7 x 17 x 3-inch chassis for the audio section, and base for the r.f. unit.

Or, some constructors may prefer to utilize separate power supplies already available. If so the standard 7 x 17 x 3 or 8 x 17 x 3-inch chassis sizes will suffice. Tubes V_6 and V_9 can then be moved over in line with the audio tubes, and the whole line of tubes extended into the area occupied by L_7.

Placement of major components on the main chassis is shown in the top and bottom views. No dimensions have been given, since the exact locations will depend on the sizes of the parts actually to be used in duplicating the transmitter. The same general configuration should be followed, since it has been found trouble-free.

Both control relays (K_1 and K_2) were located at the right side under the chassis, near the main power switch (S_7), fuses (F_1 and F_2), and the AC power input connector (J_3), but some distance from the time delay—grid current interlock tube (V_6).

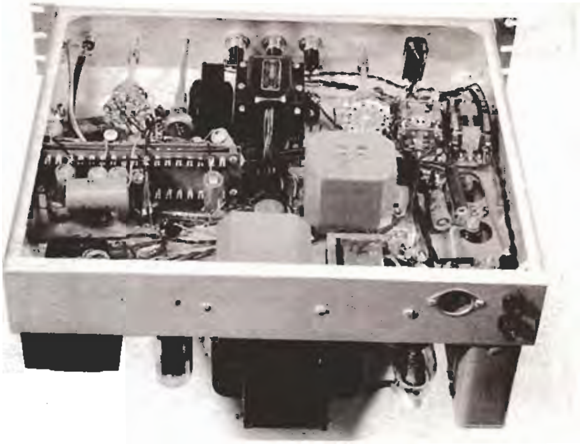

WELL-PACKED main chassis of the double sideband transmitter. Most small parts in the audio section were mounted on the two terminal boards shown back-to-back at the left side of the chassis in this view. The power input connector (J_3) and the fuse holders (F_1 and F_2) are on the rear apron of the chassis.

The panel controls and indicator lamps line up vertically with the control shafts on the r.f. unit—spaced 2 inches—as shown in the front view on page 3 of the May-June, 1959 issue.

Grid and plate leads in the first few stages in the audio amplifier (V_7, V_8, V_9 and V_{10}) should be kept as short as possible to minimize hum pickup and the possibility of feed-back troubles. Medium voltage power and control circuits were wired with regular hookup wire; high voltage leads should be wire tested for several thousand volts. Pairs of wires carrying an alternating current should be twisted wherever possible.

TOP VIEW of the main chassis with locations of the major parts indicated. The black jack near the front of the chassis is for high voltage to the r.f. unit. Three other jacks in front of the audio tubes are for metering circuit connections in positions 9 (r.f. output voltage), 10 (400-volt range) and 11 (2000-volt range) of the meter selector switch.

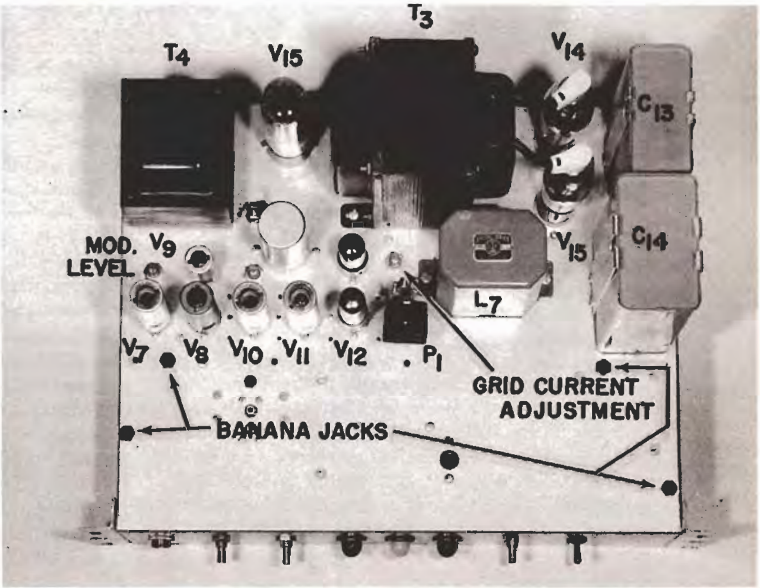

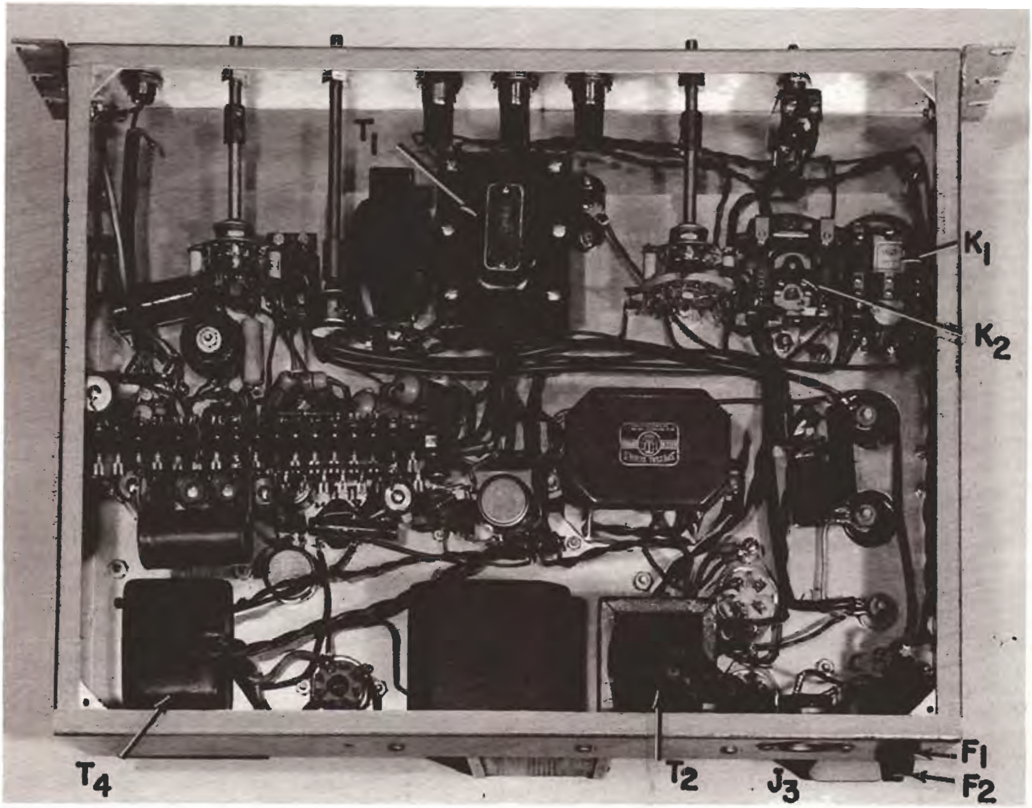

BOTTOM VIEW of the transmitter main chassis. Note the extension shafts on three of the panel controls. The doughnut-shaped coil just above the terminal boards is L_{10}, part of the audio low-pass filter. Wires carrying alternating current are twisted together wherever possible. Although the schematic diagram in the last issue showed all tube heaters operating from the 6.3-volt winding on T_4, this model has a separate transformer for all the heaters in the r.f. unit, located just to the left of T_1, and close to P_1 above the chassis.

PARASITICS

Several changes should be made in the schematic diagram, Fig. 1, on page 4 of the May-June, 1959 issue. They are:

1) Connect the cathode of V_{8A} (pin 3) to the cathode of V_{8B} (pin 8);

2) Cathode resistor for V_{10B} is 680 ohms;

3) Capacitor between the 150,000-ohm resistors in the grid circuit of V_{10B} is 0.001 mfd;

4) Resistor between 2700-ohm cathode resistor for V_{10A} and the 10,000-ohm potentiometer is 43,000 ohms;

5) RFC_6 in cathode of V_5 is 2.5 mh;

6) Resistor in cathode of V_5 is 39,000 ohms;

7) Resistor in plate voltage lead between L_9 and S_{4B} is 200,000 ohms;

8) Full scale current reading of meter with S_4 in position 3 should be 40 ma, not 50 ma. Or, for 50-ma full scale reading, change the 51-ohm resistor in the cathode of V_2 to 39 ohms.

A special bulletin, containing a corrected diagram, 11 x 17 inches in size, plus additional data on components, is available upon request from the *G-E HAM NEWS* office.

INITIAL ADJUSTMENT and tuneup, as outlined on pages 6 and 7 of the May-June, 1959 issue, should first be completed. Normal tuneup when operating the transmitter into a dummy, or "live" antenna, is quite simple.

First, set S_5 in the TUNE position and adjust C_5 and C_6 for maximum grid current in the 6146 stage, with the meter switch (S_4) in position 4 or 5. Then, turn S_5 to the TRANSMIT position, S_6 to the SINE WAVE position, and S_4 to position 9. Adjust the 500,000-ohm potentiometer in the grid of V_{10A} so that the meter (M_1) reaches about half scale when C_7, C_9 and S_3 are adjusted for maximum meter reading.

Check the signal frequently, both with tone modulation, and with voice modulation, to ensure that the 6146 balanced modulator is operating properly without "flat-topping." For a discussion of the correct and incorrect scope patterns produced by a DSB transmitter, refer to "DSB Considerations and Data," *CQ* magazine, October, 1957, page 64. This article was written by Dale S. Harris, K3CBQ, of G-E's Heavy Military Electronics Department.

SOLID HIGH-C VFO

(Continued from page 4)

reached by setting C_1 at maximum, or minimum, capacity respectively, and adjusting L_1.

Warmup frequency drift of the 12-megacycle model oscillator was about 1 kilocycle in ten minutes, after which the oscillator remained within 100 cycles of the nominal frequency. This was without temperature compensating capacitors and thus could have been reduced appreciably.

A bulletin is available with a full size chassis layout drawing, also a schematic diagram of a mixer, crystal oscillator and amplifier unit which, when used with this oscillator, forms a heterodyne type exciter.

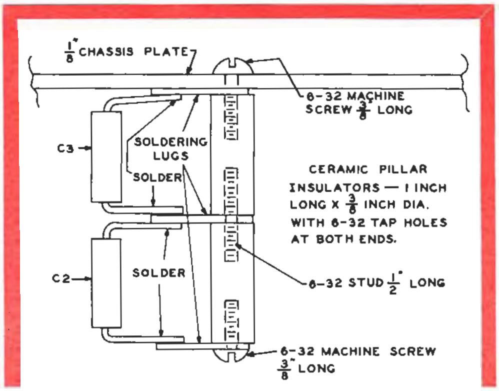

FIG. 3. ASSEMBLY DETAIL of the mounting for C_2 and C_3. Leads were clipped short and bent at right angles, close to capacitor body for rigidity. Threaded stud between pillars was made from 6–32 x ¾-inch machine screw with head removed.

1959 Supplement to SPECIAL DX LOG ISSUE

(Cut out this log and paste it in the address space at the bottom of page 12 in the July-August, 1958 SPECIAL DX LOG ISSUE of *G-E HAM NEWS*; Vol. 13 No. 4.)

OFFICIAL COUNTRIES

Prefix	Country	Continent	Station Worked	Date	Band	A1 A3	QSL	
							Sent	Rec'd
CE0[1]	Juan Fernandez Archipelago	S. America						
KS4[1]	Roncador Cay & Serrana Bank Is.	N. America						
ZK1[2]	Manihiki (Northern Cook) Is.	Oceania						
7G[3]	Republic of Guinea (French West Africa)	Africa						

FOOTNOTES

[1] New addition to *ARRL Official Countries List* since July 15, 1958, for creditable confirmations dated on or after November 15, 1945.

[2] Manihiki Islands counted as part of Cook Islands prior to March 1, 1959.

[3] Republic of Guinea counted as part of French West Africa prior to October 1, 1958.

OTHER CHANGES IN DX LOG OF JULY-AUGUST, 1958

Listing on page 4 for HK0, Archipelago of San Andres and Providencio, shown in the *Continent* column as "S. America," should be changed to read "N. America."

Listing on page 5 for PY0, shown in the *Country* column as "Trindade," should read "Trindade and Vaz Islands."

Listing on page 6 for UD6, Azerbaijan; UF6, Georgia; and UG6, Armenia, shown in the *Continent* column as "Asia," should be counted as "Europe" for the I.A.R.U.'s "Worked All Continents (WAC)" award. However, for the "Worked All Europe (WAE)" and similar awards in which European countries are involved, these three countries are considered as "Asia."

Listing on page 7 for VS2, Malaya, should be changed in the *Prefix* column to read "9M2." Prefix for Malaya was changed to 9M2, effective January 1, 1959.

Listing on page 8 for ZC3, Christmas Island, should be changed in the *Prefix* column to read "VK9."

Listing on page 9 for Nepal, shown in the *Prefix* column with no regular assigned prefix, should be changed to read "9N."

TECHNICAL INFORMATION—6EZ8

Triple, high-mu miniature Triode

The industry's first triple triode receiving tube—the 6EZ8—is capable of serving as a one-tube tuner at frequencies as high as the FM band. This 9-pin miniature packs three complete triodes in one envelope, saving designers the cost of extra tubes in many applications. Two sections have a common cathode connection, while the third section's cathode is brought out to a separate pin.

ELECTRICAL DATA

Cathode—Coated Unipotential

Heater Voltage	6.3 ± 10%	Volts
Heater Current	0.45	Amperes

DESIGN-MAXIMUM VALUES, EACH SECTION

Plate Voltage	330	Volts
Positive DC Grid Voltage	0	Volts
Negative DC Grid Voltage	50	Volts
Plate Dissipation, Each Plate	2.0	Watts
Total Plate Dissipation, All Plates	5.0	Watts
Heater-Cathode Voltage (Section 3) Plus or Minus	100	Volts

AVERAGE CHARACTERISTICS, EACH SECTION

Plate Voltage	125	Volts
Grid Voltage	−1.0	Volts
Amplification Factor	57	
Plate Resistance, approximate	13600	Ohms
Transconductance	4200	Micromhos
Plate Current	4.2	Milliamperes
Grid Voltage, approximate $I_b = 20$ Microamperes	−4	Volts

TERMINAL CONNECTIONS

EIA 9KA

Pin 1	Cathode (Section 3)
Pin 2	Grid (Section 3)
Pin 3	Plate (Section 3)
Pin 4	Cathode (Section 2), Cathode (Section 1), and Heater
Pin 5	Heater
Pin 6	Plate (Section 2)
Pin 7	Grid (Section 2)
Pin 8	Plate (Section 1)
Pin 9	Grid (Section 1)

HAM NEWS

Available FREE from your G-E Tube Distributor

JULY-AUGUST, 1959

VOL. 14—NO. 4

E. A. Neal, W4ITC—Editor

BUILD-IT-YOURSELF IDEAS
from the 999 radio amateurs at
GENERAL ELECTRIC

published bi-monthly by
RECEIVING TUBE DEPARTMENT
Owensboro, Ky.

HAM NEWS

SEPTEMBER-OCTOBER, 1959

Also in this issue —

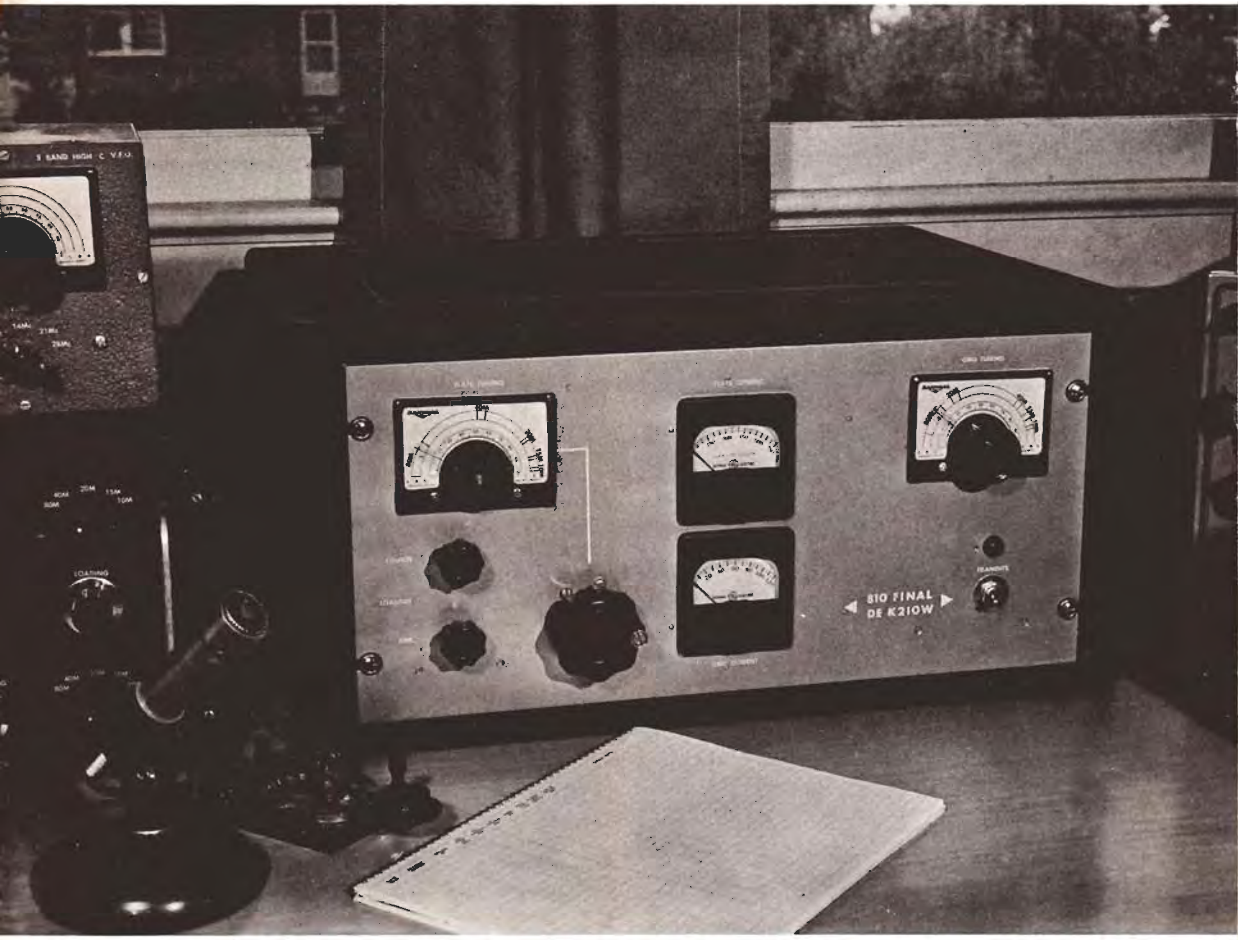

COMPACT TRIODE KILOWATT

featuring —
GL-810 Triodes in parallel
Simplified tuning controls
Rapid bandchanging from panel
Complete, simple TVI shielding

. . . see page 3

—*Lighthouse Larry*

SCANNING the SPECTRUM

MEET THE DESIGNER . . .

K2IOW again — Bob Hall of Schenectady, N. Y. has gone on from his latest offering, described herein, to whipping up more interesting gadgets at his workbench. The innocent-appearing 'scope in his ham shack (see page 3) includes a special circuit for transmitter monitoring. You'll read about it in an early issue.

COMING NEXT ISSUE . . .

A kilowatt band-switching grounded-grid linear with a pair of GL-813 pentodes, as pictured below, will be featured in the November-December, 1959 issue. It can be driven to full output by most popular sideband exciters, and will operate efficiently with plate voltages from 1500 to 2500.

Watch for this issue early in November at your G-E Tube Distributor.

WHILE CHECKING with our two-way radio folks on the mobile power supply offer, they amazed me with facts on the yearly growth of mobile radio communications.

Since all of this equipment requires periodic maintenance and service, a great opportunity exists for radio amateurs to utilize their unique background in servicing these systems. It can be a full-time vocation, or profitable sideline.

If you'd like more information, write to the National Service Manager, General Electric Co., Communication Products Dept., Mountain View Road, Lynchburg, Va. He will send you full details.

IT'S EDISON AWARD TIME AGAIN . . .

Nominations are now open for the 1959 Edison Radio Amateur Award. This will be your eighth opportunity to share in honoring a radio amateur who has rendered public service that reflects credit both on himself and fellow radio amateurs.

This year, the Award is extended to include the newly admitted states of Alaska and Hawaii. A candidate must have performed his worthy service while pursuing his hobby within the limits of the U.S.

Recipient of the Award will be chosen, as before, by a panel of distinguished, impartial judges. They will make their selection only from names you and others have submitted by letter. Make sure that the judges overlook no worthy candidate.

Complete details are given in our announcement in the October issues of *CQ* and *QST*. Read them and write your nominating letter *now*, before the postmark deadline of January 4, 1960.

Or, send a note to the *G-E HAM NEWS* office and we'll forward complete details.

NEW TUBE MAKING FILM . . .

Something new has been added to the field of electronics:

The first full-length educational motion picture based on the design and manufacture of receiving tubes — and with a love story woven into the background.

Entitled, "The Teacher Wore White," the new color movie runs about 40 minutes. The film is being made available throughout the nation for showing in educational programs.

The film is more than a factory tour. It is the story of Don Manning, a young engineer, and Susan Wells, a pretty instructor in charge of training new operators in a General Electric receiving tube plant. Her job, in the story, is to show the young engineer some fundamental details of receiving tube manufacturing; his job is to solve a tube design problem.

The film, in effect, is the story of the 7,000 employees of the General Electric Receiving Tube Department — how their personalities and their work are blended to produce many millions of tubes that go into radios, television and industrial electronic equipment throughout the nation.

The principal roles in the movie are played by professional actors, but the "extras" in the picture are real-life men and women in the General Electric receiving tube plants in Owensboro, Ky., Tell City, Ind., and Anniston, Ala.

Write for details on how your group can obtain this film.

COMPACT TRIODE KILOWATT

***TRIODE TRANSMITTING TUBES** have been historically associated with large, bulky final amplifier constructional techniques.*

"But bulk is not essential," says K2IOW, "look at the compact triode final in my shack. It fits into a standard 8¾-inch high table rack cabinet, and has a pair of non-critical GL-810 triodes in parallel."

MODERN COMPONENTS, plus simplified circuitry, were primarily responsible for the evolution of this compact amplifier which can be operated in any of the popular transmission modes: class C for CW or AM phone; or as a class B linear amplifier for sideband. The two GL-810 triodes in parallel are fully capable of handling the maximum legal input in the above classes of service.

The amplifier can be driven by a transmitter with a power rating of from 75 to 150 watts, the range which spans most of the popular commercial transmitters. No power dissipating network is required, as is necessary when driving most tetrode and pentode kilowatt finals from these transmitters. Also, no screen voltage supply is needed.

TELEVISION INTERFERENCE is a most important consideration these days and the COMPACT TRIODE KILOWATT has passed interference tests with flying colors. It has been operated less than four feet away from a vintage television receiver without causing interference to local channels 6, 10 and 13; nor to a fringe-area signal on channel 2. Some old receivers with a 21-megacycle intermediate frequency may encounter interference from this final, as they would with any high power transmitter on this band.

Band changing and tuneup take very little time, since there are only four panel controls, as identified in the front panel view on page 3. The grid and plate circuit controls can be preset to the correct band from the calibrated indicators. Once an operator becomes familiar with the procedure, it should not be necessary to reduce plate voltage during tuneup.

THE CIRCUIT for the amplifier is quite standard. Since the triode tubes must be neutralized, a push-pull grid circuit, the multi-band tuner (National MB-150), shown in the schematic diagram, FIG. 1,

(continued on page 5)

COMPLETE STATION at K2IOW with the Compact Triode Kilowatt at the right side of the operating desk. Other equipment includes an NC-240D receiver and speaker (extreme left); the 6L6-GC exciter which drives the 810 final; indicator for SWR bridge and High-C Bandswitching VFO atop the exciter; 5-inch 'scope for monitoring; and a 3-foot-high rack cabinet containing (top to bottom) class B GL-805 plate modulator, high voltage supply for the modulator, and a 2,000-volt DC supply for the 810 final.

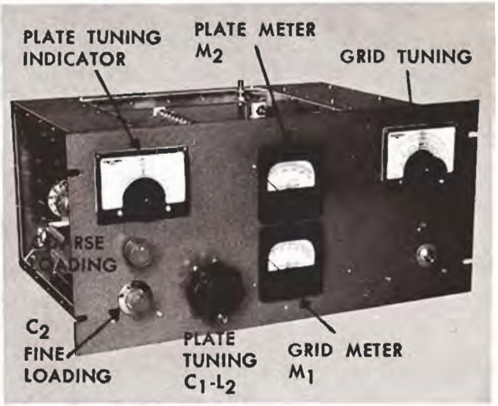

PANEL VIEW of the 810 final. The large knob turns both the rotary inductor and input variable capacitor in the pi-network plate tuned circuit. Indicator dial at left shows band to which plate circuit is tuned. Dial at right is coupled to MB-150 multi-band tuner in grid circuit and provides convenient tuning rate.

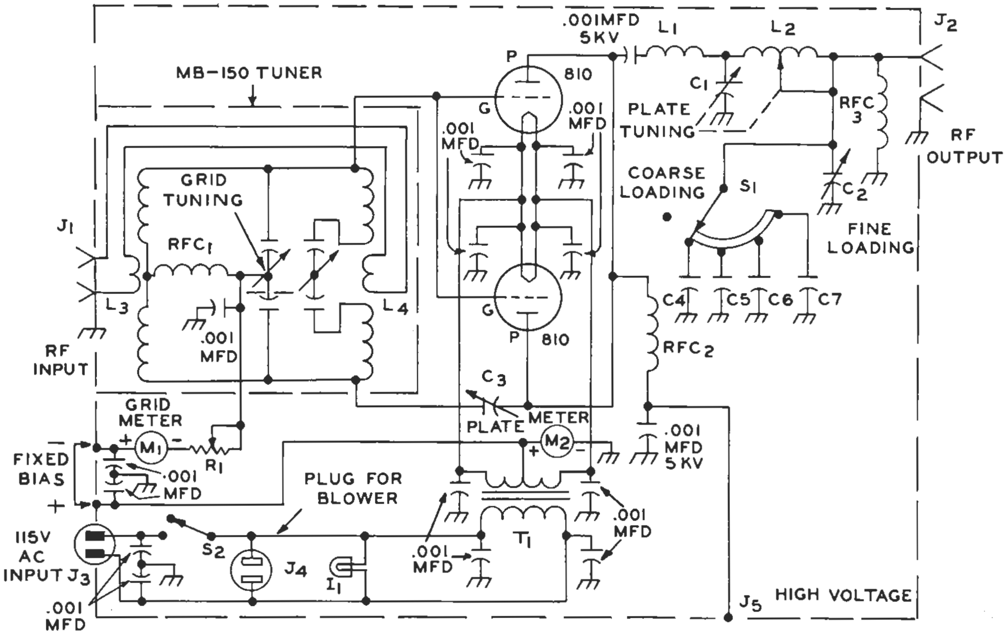

FIG. 1 SCHEMATIC DIAGRAM of the GL-810 triode final. Note that the grid bias return lead is connected directly to the center tap on the filament transformer (T_1) without going through the plate current meter (M_2). Thus, M_2 reads only plate current and not combined plate and grid current. All 0.001-mfd bypass capacitors are disc ceramic, 1,000 volts working, unless otherwise specified. All power and meter circuit wiring should be shielded.

PARTS LIST

C_1........30 — 150-mmf variable, 0.175-inch air gap (Johnson 150D70; or National TMA-150).

C_2........20 — 500-mmf variable, 0.045-inch air gap (Johnson 500E20, Cat. No. 154-3).

C_3........2 — 10-mmf air variable, 0.375-inch air gap (Johnson N375, Cat. 159-375 neutralizing cap).

C_4, C_5, C_6..................500-mmf, 2,500-volt mica.

C_7.................................0.001-mfd, 2,500-volt mica.

I_1........115-volt candelabra base pilot lamp and bracket.

J_1 J_2..............chassis type coaxial cable connector.

J_3........chassis type 2-prong male power connector.

J_4........chassis type 2-prong female power connector.

J_5........single prong high voltage connector (Millen type 37001, red plastic).

L_1........0.3 uh, 3 turns of 0.062 x 0.250-inch copper strip, 1¾ inches in diameter, 1½ inches long, 2 turns per inch, with 1-inch leads.

L_2........15 uh, 5-ampere rotary inductor, 27 turns, No. 12 wire (B & W No. 3852, used in this model; or Johnson Cat. No. 229-202).

L_3........8 turns, No. 16 insulated wire, 1¼ inches in diameter, mounted inside center of larger coil on MB-150 tuner.

L_4........2 turns, No. 16 insulated wire, wound over center of small coils on MB-150 tuner.

M_1........0 — 150-ma DC milliameter (General Electric DO-41 or DO-71, 3½ inches square; or new type DW-91, 2½ inches square).

M_2........0 — 500-ma DC milliameter (to match M_1).

MB-150 National MB-150 multi-band tuner, modified per instructions in mechanical details.

R_1..................1,000 ohms, 25-watt potentiometer.

RFC_1..............2.5-mh r.f. choke; part of MB-150.

RFC_2....145-uh single layer r.f. choke (National R-175A; B & W No. 800, or Raypar No. RL-100 also suitable).

S_1........11-position, single section progressive shorting tap switch, stop set for 5 positions (Centralab P1S ceramic wafer and P-123 index).

S_2................single pole, 1 position toggle switch.

T_1........10-volt, 10-ampere filament transformer, 115-volt primary.

RFC_3....2.5-mh pi-wound r.f. choke (National R-100).

was necessary. An r.f. voltage of the proper phase and amplitude to prevent regeneration or oscillation is fed back to the lower end of this tuner through C_3.

Greater link-coupling transfer efficiency was obtained in the multi-band tuner by replacing the original single link, only on the low-frequency coil, with individual links for it and the high frequency coils. This change is described in the construction details.

In the plate circuit, plate voltage is fed to the tubes through RFC_2. The pi-network is formed by capacitors C_1 and C_2, plus C_4, C_5, C_6 and C_7 in parallel, depending upon the setting of S_1; and coils L_1 and L_2 in series. All the capacitors across the pi-network output are needed when matching into low impedance loads — 100 down to 30 ohms — at 3.5 megacycles.

Mechanical ganging was employed between C_1 and L_2 to combine these controls and maintain a nearly constant L/C ratio in the plate tank circuit throughout the frequency range covered by this amplifier. A pair of worm gears having the proper ratio drives C_1 from maximum to minimum capacitance while L_2 is being cranked from maximum to minimum inductance.

The 28-megacycle inductance, L_1, was connected between the plates of the GL-810's and C_1 to remove C_1's minimum capacitance from the input side of the pi-network at this frequency. Thus, only the output capacitance of the two tubes appears across the input of the pi-network. About one half to two turns of L_2 are in the pi-network at 28 megacycles, and C_1 and C_2 are across the output side.

The power connections are identified on the schematic diagram. Fixed negative bias of about 80 volts is sufficient with the GL-810's operating at 2,000 volts on the plates. The bias supply should have good voltage regulation. K2IOW uses the electronically regulated bias supply circuit which has appeared in the "Power Supplies" chapter of *The Radio Amateur's Handbook* (ARRL) for several years.

(continued on page 7)

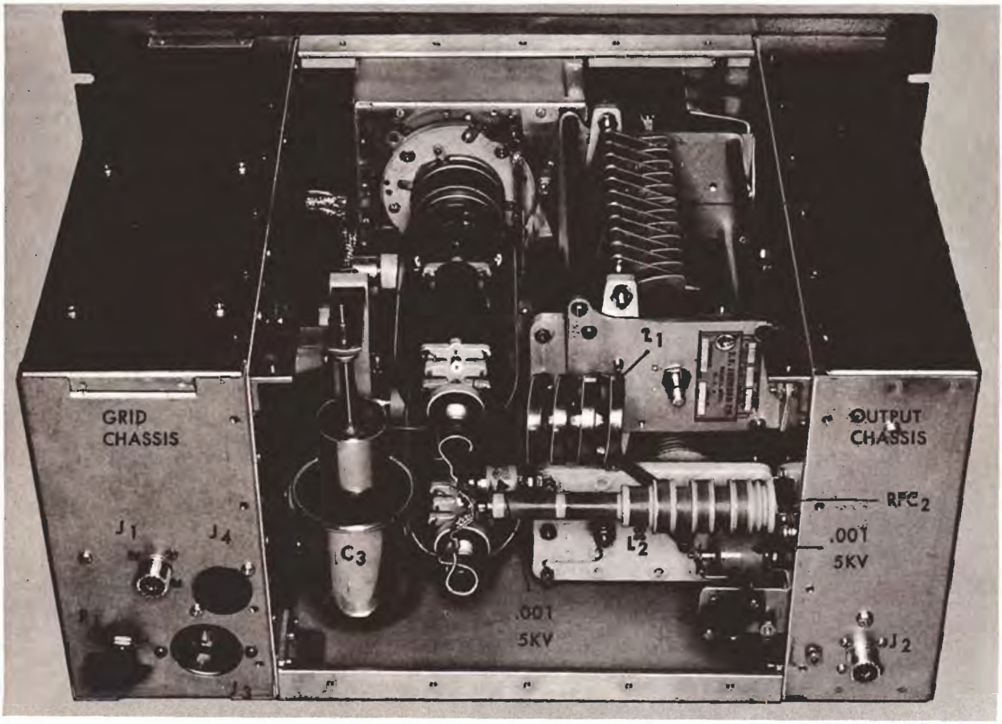

REAR VIEW, looking down into the final. A separate lead runs from each 810 plate cap to the plate circuit r.f. choke (RFC_3). Cylindrical blocking capacitor behind r.f. choke (0.001-mfd, 5,000 volts) connects to one end of 28-megacycle coil (L_1), made from copper strap. Other end of L_1 fastens to terminal on L_2. High voltage connector (J_5) is on small angle bracket just below base of r.f. choke, with bypass capacitor behind it. Aluminum angle in foreground connects upper rear corners of the chassis.

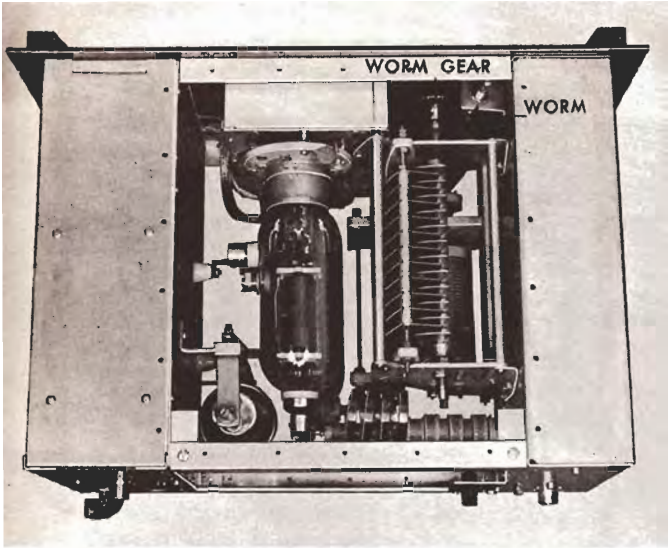

TOP VIEW, showing the white ceramic feedthrough insulator for connection between 810 grid caps and the MB-150 multi-band tuner, located inside chassis at left. Meters are shielded from r.f. compartment by the 5 x 7 x 2-inch chassis on which the 810 tube sockets are mounted with ¼-inch long spacers.

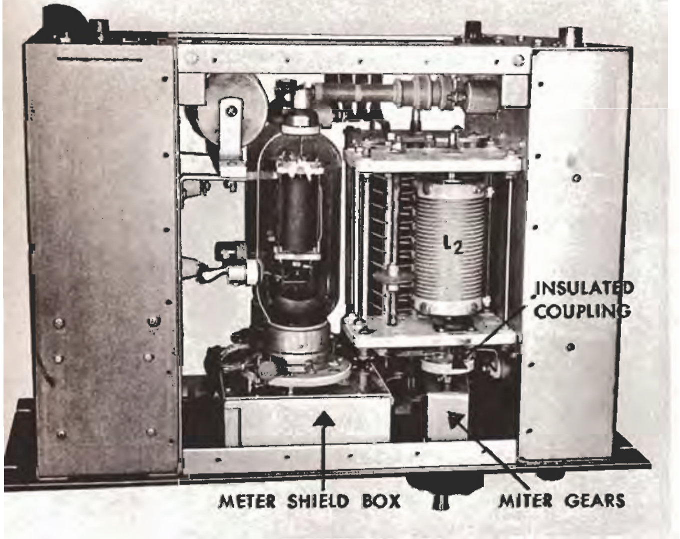

BOTTOM VIEW, showing the shielded leads running from the filament transformer (T_1) inside the grid chassis to the 810 tube sockets. Each filament pin is bypassed individually with shortest possible leads. Neutralizing capacitor (C_3) fastens to grid chassis with 2-inch-long angle brackets.

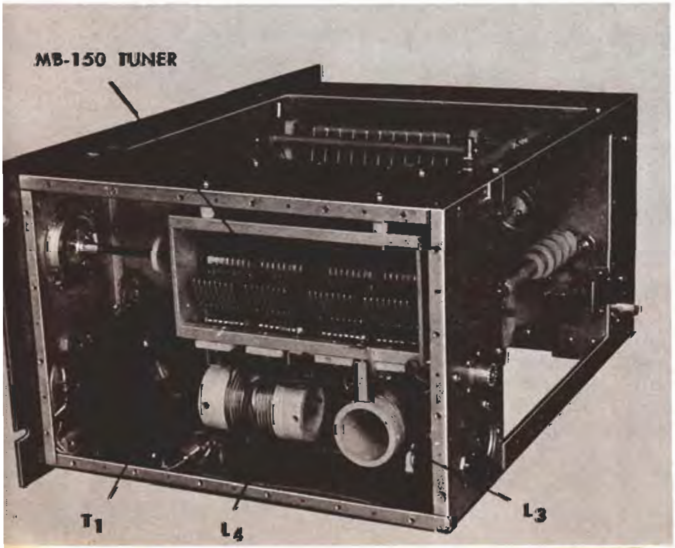

SIDE VIEW of the 4-inch deep grid circuit chassis, showing the modified MB-150 grid tuner. Note the 2-turn link coil (L_4) on the high frequency coil; see PARTS LIST for details. Insulated extension shaft runs between MCN dial and shaft on MB-150 tuner.

THE TRIODE KILOWATT was a pleasure to build, and it's a joy to operate. The vertical chassis arrangement lends itself to easy construction, requiring a minimum of framework to support shielding. The usual workshop hand tools, plus a ¼-inch electric drill, were used for all the mechanical work except the meter and indicator dial holes. The latter can be cut with a circle cutter, hole saw or counterbore.

The pictures and accompanying captions on pages indicate placement of the major components in the amplifier. Precise locations of the chassis and holes on the panel, and critical dimensions, can be determined from the top and front view sketches in FIG. 2. The knob shaft which drives C_1 and L_2 may require slightly different placement, depending on the actual parts used, and the gear drive assembly.

BOTH CHASSIS and other components on the panel were fastened with No. 8-32 screws driven into tapped holes in the 8¾ x 19-inch aluminum rack panel (Bud PA-1105, or equivalent). All screws were cut off and filed flush with the panel surface before painting. During assembly, the three chassis were lined up and clamped to the back of the panel. Holes were drilled from the panel front with a No. 29 drill and threaded with an 8-32 tap. Use turpentine to prevent the tap from becoming clogged with aluminum chips. Matching holes in the chassis were enlarged.

THE GRID CHASSIS, which had to be 4 inches deep to house the MB-150 tuner, was assembled from *See-Zak* chassis plates and side rails. An 8 x 12-inch plate (P-812) forms the chassis deck, inside the amplifier. A pair of 4 x 8-inch side rails (R-48) form the chassis front and rear; while a pair of 4 x 12-inch side rails (R-412) form the top and bottom side walls. The outside of the chassis was covered with shielding later.

The MB-150 tuner hangs upside down on pillars ¾ of an inch long inside the grid chassis, with the tuning shaft 6¼ inches above the bottom wall. Drill holes in the chassis top to match those in the capacitor frame on the tuner. There's sufficient room between the chassis front wall and the MB-150 tuner for a normal-size 10-volt, 10-ampere filament transformer (T_1), but some king-size transformers may not fit. Be sure to allow room for I_1 and S_2 in front of T_1.

The shield box for the meters — also the mounting for the 810 tube sockets — is 5 x 7 x 2 inches over-all (see detail view on page 9). A See-Zak chassis plate (P-57) forms the deck; while the end and side rails are 2 x 5 inches (R-25), and 2 x 7 inches (R-27), respectively. A conventional aluminum chassis of this size can be used, but must be fastened in place with self-tapping screws driven into the bottom lip from the front of the panel.

THE PLATE CIRCUIT pi-network is mounted on the top deck of an 8 x 12 x 3-inch aluminum chassis (Bud AC-424, or equivalent), as shown in the detail view on page 10. The capacitor (C_1) and rotary inductor (L_2) are coupled together through a right angle drive on the shaft of L_1; in turn connected through a panel bearing and shaft assembly to a worm (Boston No. LTHB) and a worm gear (Boston No. G-1029) on the shaft of C_1. The worm gear ratio — 50 to 1 — was selected to enable the rotor of C_1 to turn 180 degrees while the rotary inductor is being cranked through the 27 turns required to move the contact roller from end to end. The shafts on C_1 and L_2 are 4¼ inches apart.

(continued on page 9)

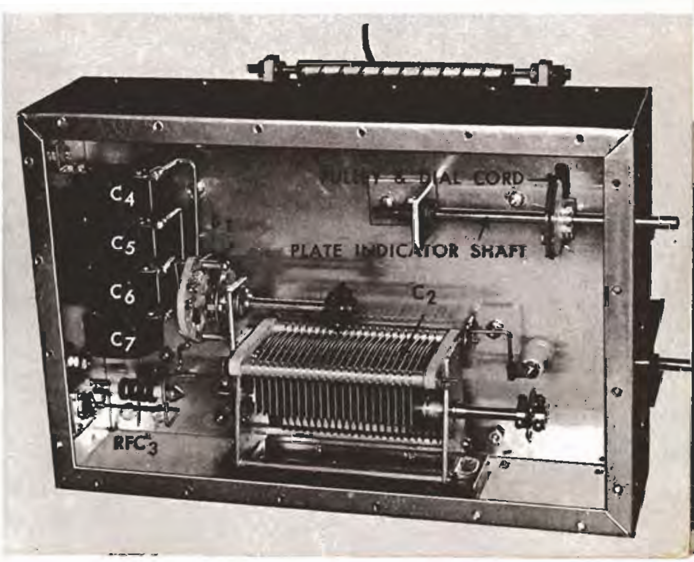

INSIDE VIEW of the output chassis, showing the coarse (C_4-C_7) and fine (C_2) loading capacitors in pi-network. Extension shafts are used to turn C_2 and S_1. Note method of mounting plate circuit indicator shaft, and pulley for dial cord, which runs to same size pulley on shaft of C_1 (See view of pi-network on page 10).

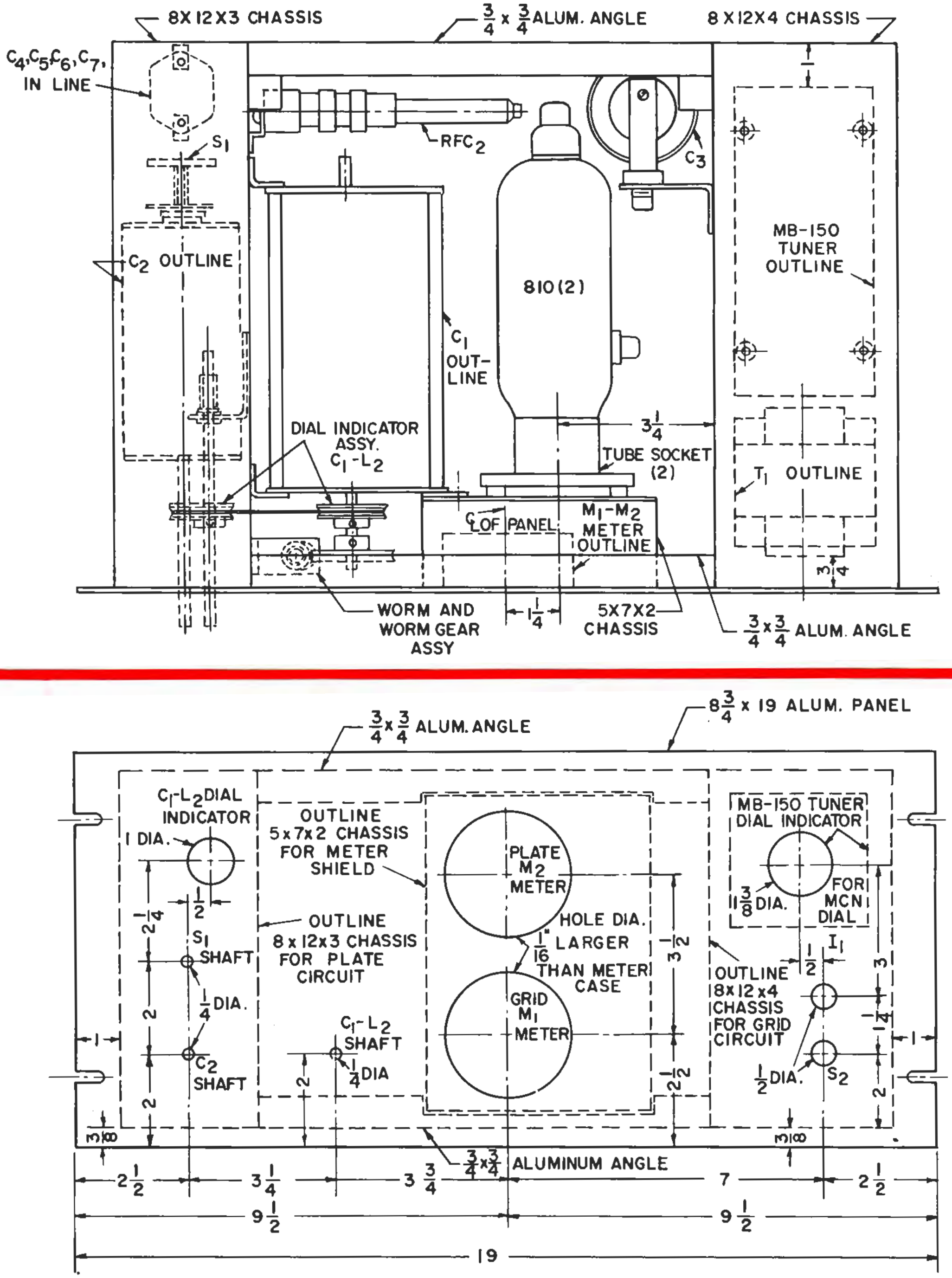

FIG. 2. TOP AND FRONT loyout diagrams for the 810 triode final. Positions of all major components have been indicated, but may vary in accordance with the sizes of parts actually used in duplicating this amplifier. Panel layout allows room for meters with 3½-inch diameter flanges on cases. Spacing between the shafts on C_1 (top) and L_2 (bottom) is 4¼ inches. Note notches in angle behind panel to clear meter shield.

The knob shaft for L_2 was run through a box-section aluminum extrusion which houses the miter gears (2-Boston No. G-464). However, the lower end of the vertical shaft could be supported by a panel bearing mounted in an angle bracket similar to that at the upper end of the shaft. A panel bearing on the knob shaft for L_2 could support it at the panel.

Alignment of the miter gears is accomplished simply by sliding them into the proper relative positions before tightening the set screws. The worm gear on C_1 is then lined up with the vertical shaft. Provide a slot in the upper angle bracket for the vertical shaft. This permits the shaft to be moved for proper meshing of the worm gears. Finally, tighten the nut on the upper panel bearing to lock the shaft in this position.

The capacitors, switch and other parts in the pi-network output section are mounted inside the plate circuit chassis. Parts locations and assembly details are shown in the end view on page 7.

Once all the holes in the panel and chassis have been drilled, the chassis should be temporarily assembled to the panel. Four 10-inch lengths of ¾ x ¾-inch soft aluminum angle (do-it-yourself type) should then be cut. Two of them are fastened to the panel, as shown in the detail photo below. The others are fastened between the upper and lower rear corners of the chassis with small angle brackets cut from the same material. Shields are then cut from perforated sheet aluminum (do-it-yourself type) to cover the top, bottom and rear openings between the chassis; also the open ends of the two chassis. Drill holes for No. 6-32 machine screws in the aluminum angle; and for self-tapping screws in the chassis, spaced not more than 1½ inches, using the perforated shields as templates.

SMALL PARTS, such as angle brackets, should be facricated to fit the parts being mounted. Remove the aluminum base from C_3 and make two angle brackets to support it from the grid chassis deck. A frame for the plate tuning indicator to match the grid tuning MCN dial was made by tracing around the MCN frame onto a piece of sheet aluminum. This frame was cut out and painted black wrinkle.

The hub for the plate tuning dial pointer was made from a Lucite disc 1½ inches in diameter. It also was finished in black wrinkle paint. The pointer is of clear plastic to match the MCN dial pointer, with an indicator line scratched on it, and filled with black paint. The pointer was cemented to the back side of the hub. The hub was fastened to the indicator shaft with a 4-40 machine screw driven into a hole tapped in the end of the shaft.

Two plastic pulleys about 2 inches in diameter — one on the shaft of C_1, and the other on the plate tuning indicator shaft inside the plate circuit chassis — drive the dial pointer. They can be adapted from table radio dial cord pulleys, or turned from sheet Lucite. Because the indicator rotates through only 180 degrees, the dial cord can be fastened at one point on each pulley to prevent slippage.

Modify the MB-150 tuner by removing the original link coil and substituting L_3 inside the low-frequency coil form. Make the leads on L_3 long enough to run out of the form, with one wire going to the r.f. input jack, J_1; and the other to L_4. Install L_4 between the two coils on the high-frequency coil form, as shown in the grid circuit view at the bottom of page 6.

FINAL ASSEMBLY of the parts on the two chassis may begin after the burrs are removed from all holes. All parts should be mounted and the wiring completed before fastening the grid chassis to the panel. Be sure to leave the shielded leads to the meters and 810 tube sockets long enough. Next, install the panel and meters, wiring

(continued on page 10)

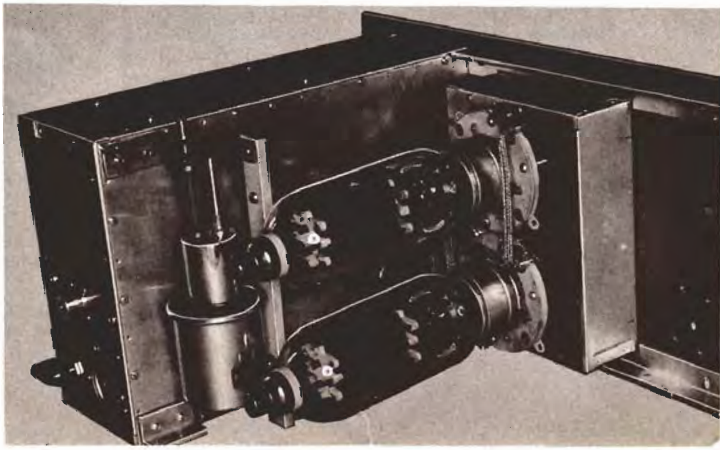

DETAIL VIEW showing the sockets for the 810 tubes positioned so that the plates lie in a vertical plane. This prevents possible grid-to-filament short circuits due to filament sag when filaments are hot. Details on grid chassis and meter shield boxes are given in the constructional details. Outside cup on C_3 connects to plates of 810 tubes; inside cup to MB-150 tuner through small feedthrough insulator.

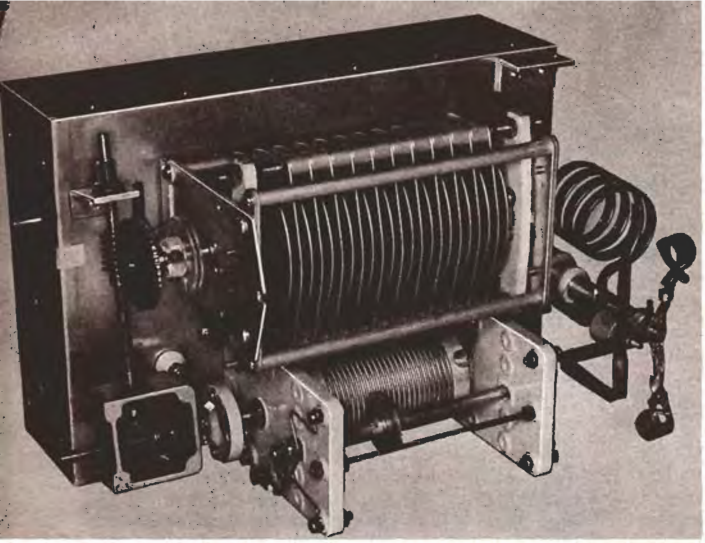

DETAIL VIEW of the pi-network assembly and the gear drive between the shaft which turns L_2, and C_1. Shafts for the miter gears can be mounted on angle brackets, instead of the box-type housing shown. Note pulley for indicator dial with dial cord crossed for proper rotation of pointer. Insulated shaft coupling must be used on shaft of L_2. Feedthrough insulator behind gear box is for connection from L_2 to stator of C_3.

them before assembling their shield box. Mount the 810 sockets on the 5 x 7 shield cover and fasten it in place.

After the plate circuit chassis is in place, the $\frac{1}{16}$ x ¼-inch, copper strap leads between the plate circuit components may be fitted in place. Flexible copper strap or braid should be used for the 810 grid and plate leads. One end of L_1 fastens to the 0.001-mfd ceramic capacitor at the top of RFC_2; the other end is bolted to the strap connecting the stator of C_1 and the input end of L_2.

Forced ventilation of the table rack cabinet was accomplished by fastening a small fan — a phono motor with a 3-inch diameter fan — over a 3⅛-inch diameter hole in the back of the cabinet, in line with the lower 810 tube. A short duct made from a 3-inch diameter can was fastened inside the cabinet, extending to within ⅛ of an inch of the amplifier shielding.

PRELIMINARY TUNEUP should be completed without the shields in place. Turn the plate tuning control until L_2 is about ½-turn from minimum inductance. Install the GL-810 tubes, turn C_2 to the half-meshed position, and set S_1 so that none of the fixed loading capacitors (C_4-C_7) are in the circuit. Obtain a grid dip meter covering the 30-megacycle range and hold its coil near L_1. A dip should be observed between 30 and 32 megacycles. If the dip is below 30 megacycles, spread the turns on L_1 and recheck. If necessary, decrease the diameter of L_1 slightly to shift the dip to above 30 megacycles.

Apply 115-volt AC power, bias voltage and about 50 to 75 watts of r.f. driving power at 14 or 21 megacycles through J_1. Do not connect plate voltage at this time. Tune the MB-150 to resonance, as indicated by maximum grid current on M_1. Leave C_2 and S_1 set as above and, while turning the plate tuning control with the roller on L_2 about 6 or 8 turns from minimum inductance, watch M_1 for a fluctuation in grid current. Starting with C_3 at maximum capacitance, turn it toward minimum capacitance while rocking the plate tuning back and forth until virtually no fluctuation in grid current is observed.[1] The amplifier is now neutralized.

Shielding may now be installed and the neutralization adjustment rechecked. A small hole was cut in the top shield over C_3 for this purpose. Connect a suitable dummy load[2] to J_2 and apply about 1,000 volts to J_5. With the same r.f. drive used for neutralizing, tune the MB-150 for maximum grid current, then tune the plate circuit for a dip in the plate current reading on M_2. Turn C_2 toward minimum capacitance to increase the loading to about 200 milliamperes plate current, readjusting the plate tuning for a dip.

If the amplifier is operating properly, increase the plate voltage and current to the normal rating[3] for the class of service in which the amplifier will be operated. A fixed bias supply is recommended, especially for CW operation; and it is essential for class B linear operation.

Normal tuneup consists simply of adjusting the exciter to supply the required driving power, tuning the grid and plate circuits to resonance, and loading with the coarse and fine loading controls.

Type GL-8000 triodes, electrically and mechanically similar to the GL-810 except for amplification factor (mu), were tested in the amplifier and found to require somewhat less driving power.

---

[1] Other procedures for neutralization are given in the amateur radio handbooks.

[2] Four 150-watt lamps in series-parallel; or, see "Using Resistors as RF Loads," **G-E HAM NEWS**, January-February, 1951 (Vol. 6, No. 1), for other ideas.

[3] Complete technical information on the GL-810 and GL-8000 can be obtained by requesting publications ETX-150A and ETX-215, respectively, from: Technical Data Section, Power Tube Department, General Electric Company, Schenectady 5, New York.

G-E HAM NEWS SPECIAL MOBILE POWER SUPPLY

Scouting around the Company recently, I ran across a limited quantity of transistorized mobile power supplied at our Communication Products Department in Lynchburg, Va.

Sensing a chance to provide you with a real buy, I asked these G-E'ers to make these power supplies available to *G-E HAM NEWS* readers at a give-away price.

They are capable of delivering 170 watts of DC power at a 20-percent duty cycle with an operating efficiency of between 80 and 90 percent. The output voltages and currents are just about right to power most of the commercially built mobile amateur radio receivers and transmitters now on the market.

These supplies are fully transistorized — no vibrators, no rotating parts. They have been through extensive tests — hence we have to call them used — and are no longer a current model.

They are built to commercial specifications, with dual toroidal encapsulated high voltage transformers; eleven 400-volt, 500-milliampere silicon rectifiers (alone worth more than the total price); and a separate aluminum heat sink for the transistors.

The transistors are in a self-excited oscillator circuit, with a separate feedback winding on each of the two power transformers. The silicon rectifiers are in a tapped full-wave bridge circuit.

During tests on this power supply the washer which separates each transistor from the heat sink was found to be inadequate to fully insulate the transistor during periods of heavy shock and vibration. Improved type washers will be furnished with each power supply in case you wish to replace the old-style washers.

That's all you'll have to do to these power supplies before placing them in service. Each comes complete with cables, circuit diagram, and data for changing washers.

The price is $21.50, postpaid. Or, if you send $5.00, we will ship C.O.D. for the remainder and postage. Please make checks payable to the "General Electric Company." Of course, these power supplies carry a money-back guarantee.

Address orders for *HAM NEWS* Special Mobile Power Supplies to: Mr. William L. Young, General Electric Co., P.O. Box 4197, Lynchburg, Va.

First come, first served.

—*Lighthouse Larry*

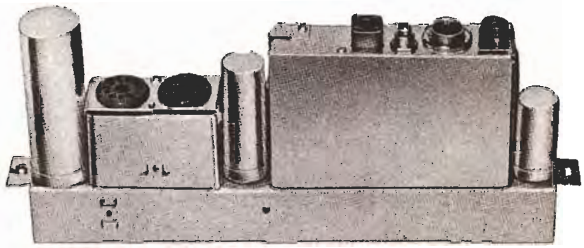

SIDE VIEW of the mobile power supply. The over-all size is 13 inches long, 6 inches high and 1½ inches wide. They weigh only 3 lbs., 11 oz. The octal sockets at the left are for output voltages to transmitter and receiver. This compact unit will furnish nearly 170 watts of DC power.

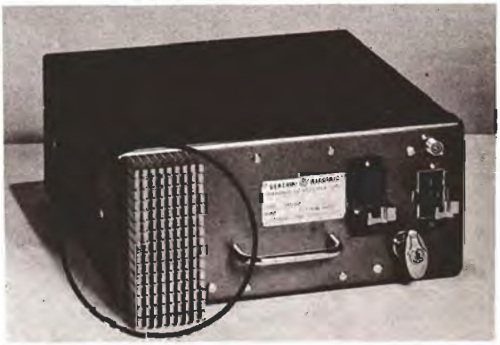

FRONT VIEW of a complete transistor-powered G-E two-way mobile radio with the heat sink for the power transistors on the front panel (inside of circle). Both the power supply chassis and heat sink can be tucked under the dash of an automobile in a space where conventional cube-shaped power supplies would not fit.

SPECIFICATIONS — EP-14-B POWER SUPPLY

Nominal battery voltage..................12 volts DC
(positive or negative ground)

Duty cycle: receive 100%
transmit (1 min. on; 4 min. off) 20%

Ambient Temperature range....–30°C to –60°C

Battery drain: receive full load)....2.1 amperes
transmit (full load)..15 amperes

Output voltages—receive: (all simultaneously)
210 volts at up to..............100 milliamperes
— 25 volts at up to..............10 milliamperes

Output voltages—transmit: (all simultaneously)
425 volts at up to............300 milliamperes
330 volts at up to............110 milliamperes
200 volts at up to..............20 milliamperes
— 25 volts at up to..............10 milliamperes

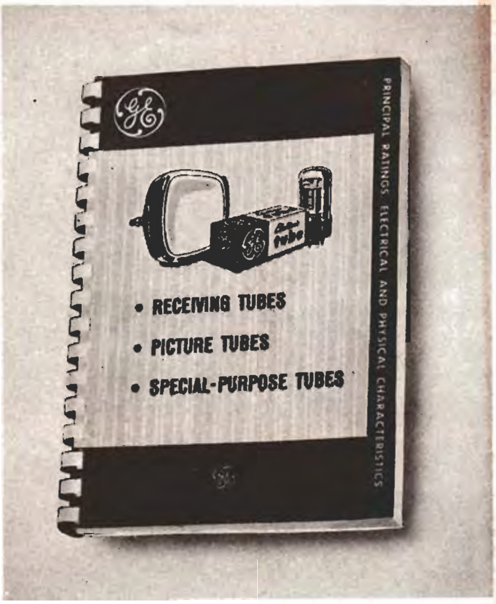

New edition now available through General Electric Tube distributors

NEW TRI-COLOR cover, new data, new tubes! Now expanded from 228 to 260 pages, the latest edition of **ESSENTIAL CHARACTERISTICS**, designated ETR-15H, continues its popular comb binding. This permits the book to lie flat on desk or workbench without weighting it down.

ESSENTIAL CHARACTERISTICS

Radio amateurs will find several significant improvements in General Electric's newest edition of its *ESSENTIAL CHARACTERISTICS* receiving and television tube handbook.

A new section lists the domestic near-equivalents of 95 foreign tube types for ready reference. In another table, standard prototypes of high reliability Five-Star tubes now are indicated.

Tube characteristics and ratings listings now include screen watts. A total of 1392 receiving and special purpose tube types and 399 television picture tube types are listed with maximum ratings and typical operation data. Special type faces for tube numbers indicate at a glance whether a tube is metal, glass, miniature, or subminiature. Basing diagrams are printed on the same page as tube listings.

Added typical circuits — including a stereo pre-amplifier — and a revised introductory section, "Interpretation of Data," plus up-dated classification charts for quick reference to tube "families" (diodes, triodes, etc.) round out the new book's features.

Sounds good? Examine it at your local G-E Tube Distributor.

HAM NEWS

SEPTEMBER–OCTOBER, 1959
VOL. 14—NO. 5

BUILD-IT-YOURSELF IDEAS
from the 999 radio amateurs at
GENERAL ELECTRIC

Available FREE from your G-E Tube Distributor

E. A. Neal, W4ITC — Editor

published bi-monthly by
RECEIVING TUBE DEPARTMENT
Owensboro, Ky.

HAM NEWS

NOVEMBER-DECEMBER, 1959

Also in this issue —

KILOWATT GROUNDED-GRID LINEAR AMPLIFIER

. . . see page 3

GL-813 pentodes have been popular with radio amateurs for years. And their smooth adaptability to grounded-grid linear amplifier circuits should continue their well-earned reputation for versatility.

—*Lighthouse Larry*

SCANNING the SPECTRUM

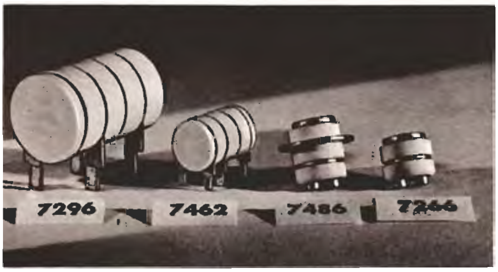

7077's CERAMIC SISTERS . . .

The four new G-E ceramic receiving tube types pictured above — plus the 7077 high-mu triode (see *G-E HAM NEWS*, January-February, 1959, page 8) form a team of ceramic tubes which are smaller in size, and unmatched in performance by any similar device that is on the market now or foreseeable in the near future.

While designed for the severe environment which military and commercial electronic equipment must frequently withstand, these tubes have many potential applications in amateur radio equipment.

Three of the tubes are high-mu triodes, and the other, the 7266, is a high frequency diode for detector, mixer or instrument probe circuits. The 7296 triode has a plate dissipation rating of 3.3 watts and a transconductance of 15,000 micromhos. The 7462 is a printed board version of the 7077 and can be soldered or welded directly into the circuit. The 7486 triode has a 1.0-watt plate dissipation and can deliver 0.3 watts output in a class C amplifier at 450 megacycles.

The 7077 was in the final transmitting stage of the Pioneer IV sun satellite which last March established a record for long-distance point-to-point communication of 406,000 miles.

COMING NEXT ISSUE . . .

A potpourri of short articles from radio amateurs at General Electric's Light Military Electronics Department in Utica, N. Y., will be featured in the January-February, 1960 issue. Subjects include an all-band balun, simplified coil design, feedline test for transmitter parasitics, and improved carbon microphone circuitry. Ask for this issue right after New Year's at your General Electric tube distributor.

NEW G-E TRANSISTOR MANUAL . . .

General Electric tube distributors now have in stock the new fourth edition of the *G-E Transistor Manual.* This completely rewritten edition contains 227 pages of information on transistors and their use in electronic circuits.

Included in the twenty chapters is information on basic semiconductor theory, transistor construction techniques, biasing, switching characteristics, transistor radio servicing techniques, plus several chapters on circuit applications.

In addition, the book has a revised listing of all American JEDEC-registered transistor types with their basic specifications and interchangeability information.

Conclusion — it's a *must* for your amateur radio reference bookshelf.

EDISON AWARD LAST CALL . . .

Nominations for the 1959 Edison Award close on January 4, 1960, so now is the time to write that letter giving full details of the public service performed by a United States radio amateur. Make sure that all worthy amateurs are nominated and thus eligible for the Edison Award's national recognition of the radio amateur who has performed the most outstanding public service during 1959.

Complete details were announced in the October and December issues of *CQ* and *QST*. Or, send a card to me for details.

—Lighthouse Larry

KILOWATT GROUNDED-GRID LINEAR AMPLIFIER

Using only hand tools, an amateur can construct a high quality flexible linear amplifier in less time than it takes to round up the relatively few parts required.

The popularity of amateur transmitters in the 75- to 150-watt power class usually provides a ready-made exciter when the time comes to add a more powerful final amplifier to the amateur station. Because pentodes have a low driving power requirement, a power dissipating device must be employed when these tubes are driven from a 100-watt class rig.

A grounded-grid amplifier circuit provided a satisfactory solution; and, experience indicates that the GL-813 operates efficiently in grounded grid.[1] Also, this tube operates well as a high-mu triode, thus eliminating the need for a separate screen voltage supply.

To provide for a 1-kilowatt power capability as a linear amplifier, two GL-813 tubes are connected in parallel and operated in a grounded-grid circuit, with both the screen grids and beam forming plates at zero DC and r.f. potential. The tubes run in class B at an efficiency of 60 to 70 percent, depending upon the plate voltage.

THE CIRCUIT, shown in the schematic diagram, Fig. 1, is quite simple, since no tuned grid circuit is required. The r.f. driving power is fed directly into the filaments of the two GL-813's. A dual r.f. choke (RFC_2) in the filament circuit isolates the filament transformer.

High voltage is applied to the GL-813 plates, connected in parallel, through RFC_3. Three blocking capacitors in parallel keep high voltage from reaching the pi-network tuning plate circuit. A ready-made tapped coil (L_1) and split-stator tuning capacitor on the input side of the pi-network provide nearly optimum L/C ratios on all amateur bands from 3.5 to 30 megacycles. One section of C_1 is in the circuit on 14, 21 and 28 megacycles, when S_2 is open. Both sections are in parallel on 3.5 and 7 megacycles, where greater maximum capacitance is required, S_2 being closed by a linkage from the switch on L_1.

A large variable capacitor (C_2) — 1500 mmf maximum — across the output side of the pi-network eliminates the need for several fixed capacitors, and a tap switch to add them to the circuit as needed. The output circuit will match impedances from 50- or 70-ohm unbalanced feedline and loads.

THE CONTROL GRIDS on the GL-813's, bypassed to the chassis at each tube socket, receive from 0 to 100 volts of negative bias from the built-in bias supply, depending

(continued on page 5)

---

[1] As in the Barker & Williamson, Inc., models L-1000A, L-1001A and LPA-1.

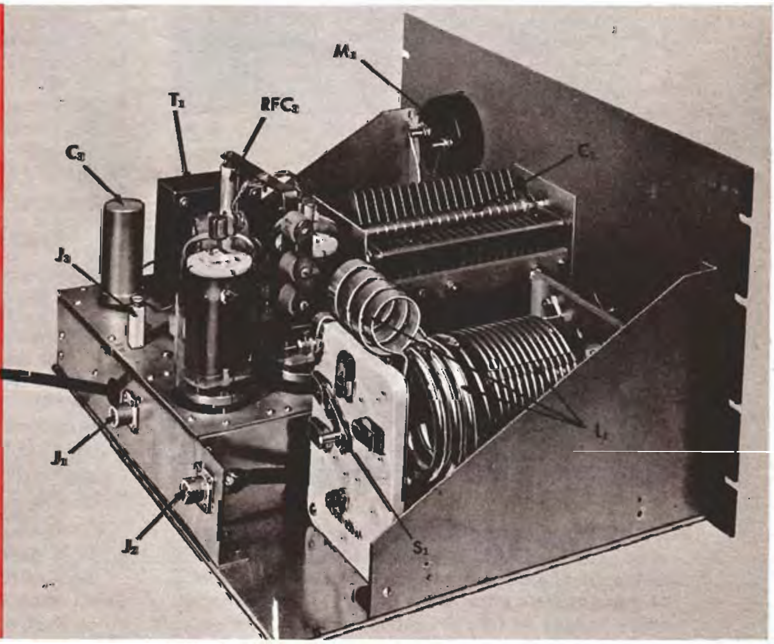

LEFT REAR VIEW of the linear amplifier. A 1/8-inch thick sheet of aluminum 13 x 17 inches in size forms the main chassis and is fastened to the panel with chassis support brackets. The plate circuit connections are made with 1/16 x 1/2-inch copper strip, while the GL-813 plate leads are No. 10 braided copper wire.

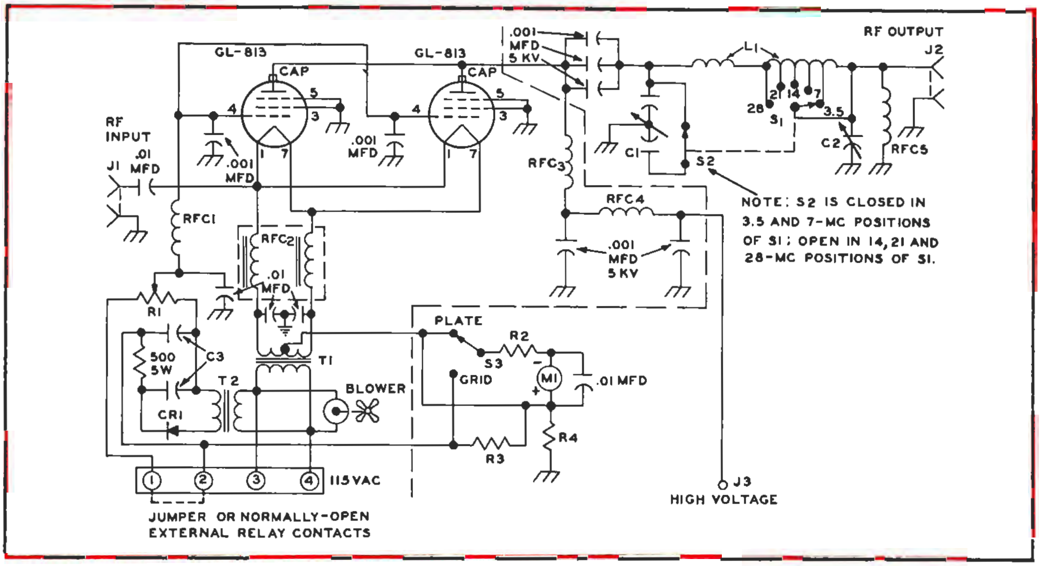

FIG. 1. SCHEMATIC DIAGRAM of the GL-813 grounded-grid linear amplifier. The five .001-mfd, 5KV fixed capacitors are of the cylindrical ceramic type with screw terminals (Centralab 8508-1000, or equivalent). All other bypass capacitances are disc ceramic, 500 volts working. Resistances are in ohms, with wattage ratings as specified. Resistances in the metering circuit are listed in **TABLE I.** No switch is shown in the 115-volt AC circuit, since it is controlled by external power switching circuits. All components to the left of the dashed line running down through the diagram are on the sub-chassis.

TABLE I — PARTS LIST

C_1	Split-Stator variable capacitor; front section, 28—160 mmf; rear section, 7-50 mmf; 0.125-inch air gap (Cardwell P-8060, or equivalent).
C_2	50—1500 mmf variable capacitor, 0.030-inch air gap (Cardwell P-8013, or equivalent).
C_3	2-section electrolytic capacitor, 40-mfd. 150 volts per section (Sprague TVL-2428).
CR_1	130-volt, 75 ma. selenium rectifier.
J_1, J_2	Chassis type coaxial cable connectors (Amphenol 83-1H hood on J_2).
J_3	1½ inch high standoff insulator.
L_1	10 uh pi-network band switching inductor (B & W 851 for up to 600 watts; B & W 850A for over 600 watts).
M_1	DC milliameter, 0-1 ma., full scale.
R_1	500-ohm, 2 watt potentiometer.
R_2	Series resistance for M_1; 1200 ohms, 1 watt.
R_3	12 ohms, 1 watt, for 100-ma grid reading.
R_4	2.4 ohms, 1 watt, for 500-ma plate reading.
RFC_1	0.5-mh, 300-ma r.f. choke (National R-300).
RFC_2	15-ampere dual choke (B & W No. FC-15).
RFC_3	200 uh, 500-ma r.f. choke (National R-175A, or B & W No. 800).
RFC_4, RFC_5	1 mh, 300-ma r.f. chokes (Nat. R-300).
S_1	5 position single section tap switch; part of L_1 pi-network coil.
S_2	Special 2-position, single section switch; see FIGS. 4 and 5 for details.
S_3	2 position, single section tap switch.
T_1	10-volt, 10-ampere filament transformer.
T_2	115-volt, 30-ma power transformer.
V_1, V_2	GL-813 power beam pentode tubes.

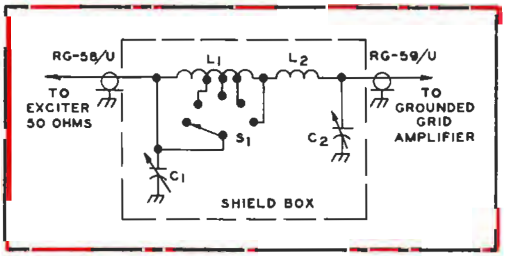

FIG. 2. SCHEMATIC DIAGRAM of an optional pi-network matching circuit. It will match the cathode circuit of the GL-813 amplifier to the 50-ohm output circuit of those exciters which otherwise might not be loaded heavy enough to fully drive the linear amplifier.

TABLE II
PARTS LIST, CATHODE COUPLER

C_1	12 — 325-mmf variable, 0.224-inch air gap (Hammarlund MC-325-M).
C_2	45—1260 mmf variable (3-section broadcast receiver variable, 15—420-mmf per section, all sections in parallel).
L_1	4.2 uh, 17 turns, No. 16 tinned wire, 1¼ inches in diameter, 2⅛ inches long, spacewound 8 turns per inch, tapped 2 (21 MC, 4 (14 MC), and 10 (7 MC) turns from L_2 end of coil. (B & W No. 3018).
L_2	0.44 uh, 5 turns, No. 12 tinned wire, 1 inch in diameter, 1 inch long, spacewound 5 turns per inch, self-supporting.
S_1	1 pole, 5 position tap switch, ceramic insulation (Centralab No. 2500, or equivalent).
Shield Box	4 x 5 x 6-inch Minibox (Bud CU-3007), or 3 x 5 x 7-inch Minibox (Bud CU-3008).

on the setting of R_1. When no connection is made between terminals 1 and 2 on the terminal strip, the tubes are biased to cut off plate current flow. Jumpering these terminals reduces the bias to the value selected by R_1. Leads should be run from these terminals to a switch, or relay contacts which close while transmitting.

Separate metering of current in the grid and plate circuits is accomplished by switching a single meter (M_1) across shunting resistors, R_3 and R_4, respectively.

Only plate current is read in the PLATE position of S_2, since the grid circuit is returned directly to the center tap on the filament transformer (T_1).

MOST EXCITERS will have a wide enough range in output impedance to match to the cathode circuit of the GL-813's (about 150 to 200 ohms, depending upon frequency). In case the exciter will only match into a 50- to 70-ohm load and will not drive the grounded grid amplifier hard enough, a pi-network matching circuit can be inserted between the exciter and amplifier.

The suggested circuit for this network is shown in Fig. 2. The parts values shown should have sufficient flexibility for most matching requirements. All components. for the matching network were housed in a 4 x 5 x 6-inch Minibox (Bud CU-3007). Lengths of coaxial cable for the input and output were cut to the proper dimensions to run to the exciter and final amplifier.

CONSTRUCTION is quite simple, due to the utilization of standard, readily available components throughout the amplifier. The main chassis is a 13 x 17 x ⅛-inch thick sheet of aluminum fastened with its bottom surface ⅛ of an inch above the lower edge of a 10½ x 19-inch aluminum relay rack panel. Only the pi-network components, meter and meter switch are on the main chassis, the remaining components being assembled on the 6 x 11 x 2½-inch sub-chassis.

The photographs and drawings illustrate the placement of the major components (Figs. 3 and 4). Either a 3½ or 2½-inch meter may be used for M_1.

The front and back plates of C_1 and C_2 are fastened to ⅛-inch thick sheet aluminum brackets 7 inches high and 4 inches wide. The shaft on which the linkage for switch S_2 is supported also runs between these plates. The parts in this linkage, and assembly details, are shown in Fig. 5. A U-shaped clip, made from spring brass or phosphor bronze, completes the connection between copper angle brackets fastened to

(continued on page 6)

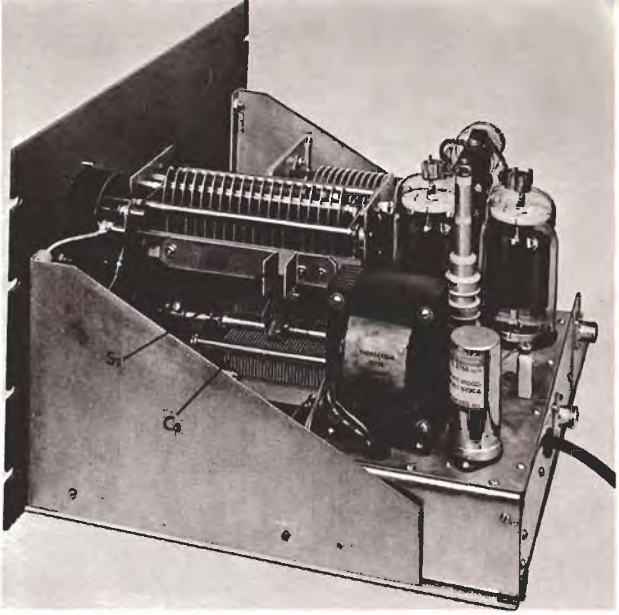

RIGHT REAR VIEW of the linear amplifier. Note how C_1 and C_2 are mounted on vertical brackets made from ⅛-inch thick sheet aluminum. The copper angle brackets and U-shaped angle bracket on C_1 is S_2 (See FIG. 5 for details). A 6 x 11 x 2½-inch aluminum chassis houses most of the smaller components in the amplifier.

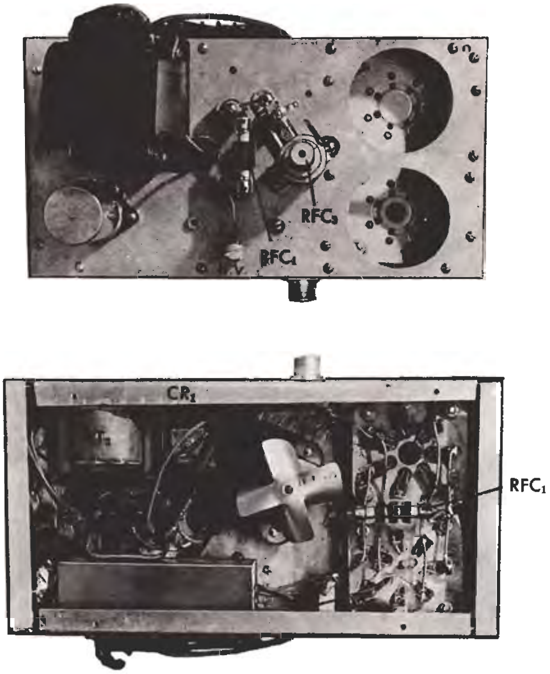

TOP AND BOTTOM VIEWS of the amplifier sub-chassis. The copper strip plate circuit connections have been removed from RFC_3 in the top view. Under-chassis wiring is insulated hookup wire, except for the filament leads, which are No. 12 tinned wire.

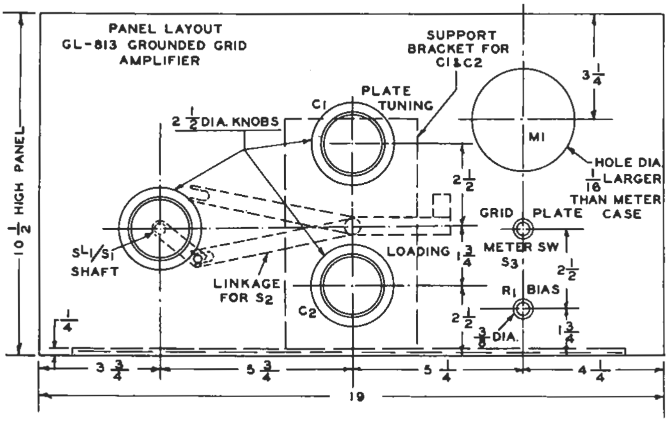

FIG. 4. PANEL LAYOUT DIAGRAM for the GL-813 linear amplifier. The linkage for S_2 pivots on the shaft located between C_1 and C_2. Drill 3/8-inch diameter panel holes for this shaft, and the shafts on C_1, C_2, L_1 and the meter switch, S_3. The aluminum chassis deck is positioned 1/8 of an inch above the bottom edge of the panel.

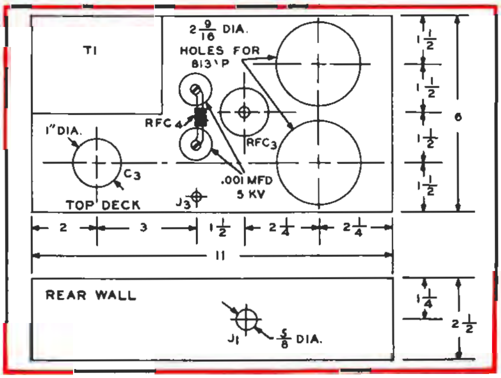

FIG. 3. LAYOUT DIAGRAM for the amplifier subchassis. Holes for the machine screws which secure the components in place are located from the holes on those components.

the two stator sections on C_1, when L_1/S_1 is in the 3.5 and 7-megacycle positions. The arm on the L_1/C_1 shaft is adjusted so that it engages the forked arm, as shown in solid lines on the sketch, when S_1 is in the 7-megacycle position. Both arms should then move up so that the forked arm is in the position indicated by dotted lines when S_1 is in the 14-megacycle position.

Under-chassis wiring, except for the No. 12 tinned wire filament leads, is run with No. 18 insulated wire. The plate circuit connections were made with 1/16 x ½-inch copper strip, as shown in the photos. A small 115-volt phonograph motor with a 3-inch diameter, 4-blade fan draws air up through holes in the aluminum base plate and out through the holes in the subchassis for the 813 tubes.

Once construction is finished, check the filament and bias voltage circuits before connecting the high voltage power supply to J_3. A power supply with provision for reducing the output voltage to about one-half or two-thirds of full voltage is recommended, especially if the full output is 2,000 volts or higher. Connect an antenna or dummy load to J_2.

TUNEUP FOR SSB operation consists simply of applying full plate voltage and, with terminals 1 and 2 on the power strip shorted, setting R_1 for 40 milliamperes of plate current with S_3 in the PLATE position. Turn S_1 to the same band on which the driving exciter is operating and apply driving power to the amplifier by injecting carrier on the SSB exciter. Adjust the exciter loading for a full-scale reading on M_1 with S_3 in the GRID position.

Turn C_2 to maximum capacitance, S_3 to the PLATE position and adjust C_1 for minimum plate current. Turn on partial high voltage and decrease the capacitance of C_2 for a plate current reading of 200 milliamperes, readjusting C_1 for minimum plate current, as necessary. Apply full plate voltage and adjust C_2 for about 400 milliamperes plate current. The grid current should read 100 milliamperes.

Switch the exciter to deliver SSB output and adjust its operation for the audio gain for normal r.f. power output. With speech, the 813 linear amplifier should swing up to about 150 milliamperes plate current; while with a steady whistle the plate current should reach 400 milliamperes. The amplifier is now tuned up.

TUNEUP FOR CW operation is similar, except that the bias voltage is adjusted initially for almost zero plate current. The exciter is adjusted to deliver 100 milliamperes of grid current in the amplifier without plate voltage. After applying partial plate voltage, load the amplifier to about 180 milliamperes plate current. With full plate voltage, the plate current should be about 350 milliamperes.

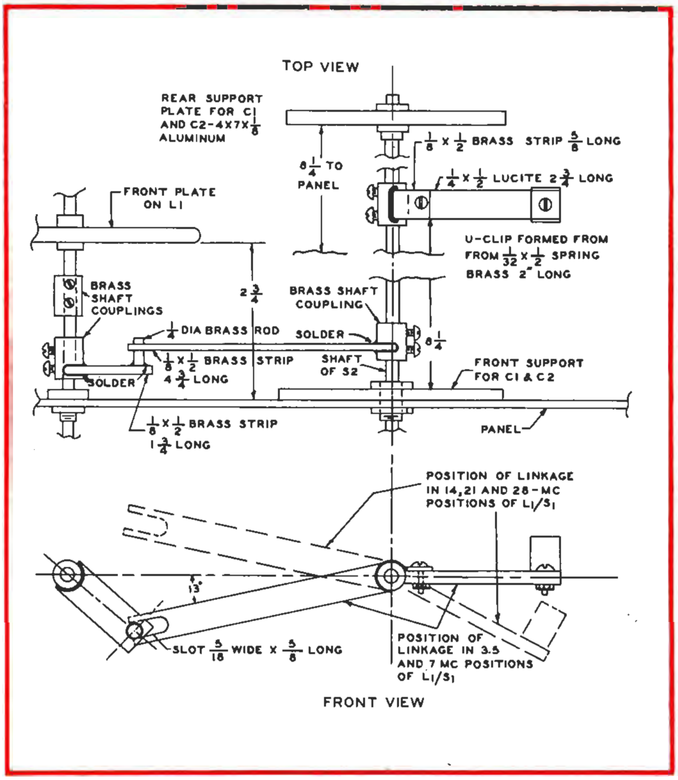

FIG. 5. DETAIL DRAWING of the linkage which actuates S_2 from the shaft driving the bandswitch (S_1) on L_1. Three ⅛ x ½-inch brass strips, soldered to brass shaft couplings, are the linkage arms. U-shaped clip-on plastic arm closes circuit between copper angle brackets on C_1 in the 3.5 and 7-megacycle positions of L_1.

This amplifier also may be driven by a conventional amplitude modulated transmitter. The plate current is adjusted to 40 milliamperes at full plate voltage, the same as for SSB operation. Adjust the exciter for 90 to 100 milliamperes of amplifier grid current. Apply partial plate voltage and load the amplifier to about 150 milliamperes plate current. Next, apply full plate voltage and adjust for 300 milliamperes plate current.

Now, reduce the driving power from the exciter until the amplifier plate current reads 150 milliamperes. When the exciter is amplitude modulated 100 percent, the 813 amplifier plate current should rise not more than 5 percent, otherwise distortion of the output signal will result.

It's a good idea to check the operation of this amplifier with an oscilloscope during initial adjustment; and also periodically to ensure linearity of the output signal. The model amplifier constructed for this article has been operated on all bands for over a year at W2GFH without a failure for any reason. It is stable, easy to adjust and provides a really potent signal.

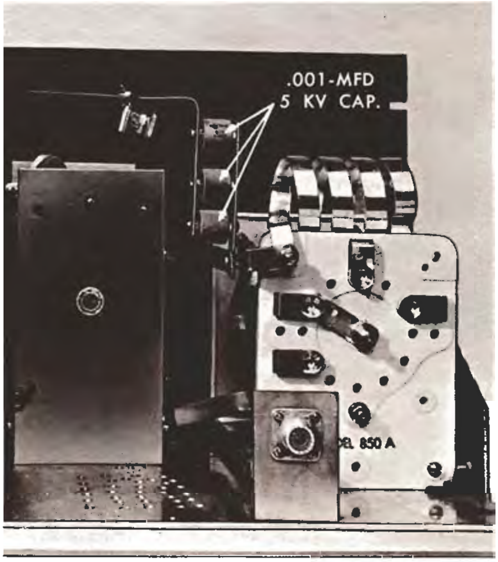

REAR VIEW of the amplifier plate circuit. Sub-chassis has been removed to show the holes in the aluminum plate through which cooling air is drawn into the chassis by the fan, and exhausted up through the chassis holes for the GL-813 tubes.

TECHNICAL INFORMATION — 12FQ8

Miniature twin double plate triode

Radio amateurs undoubtedly will doodle plenty of prospective circuits around this new and unique "signal-splitting" twin triode receiving tube with four plates — each brought out to separate base pins — instead of the usual two. The double plates make it possible to obtain two well-isolated output signals from each section.

The 12FQ8 can be used profitably to reduce the number of tubes in circuitry of instruments and other equipment where it is essential to economically reduce to a minimum the interaction between two outputs of one stage. Complete technical data and characteristics curves are available on request from the *G-E HAM NEWS* office.

ELECTRICAL DATA

Cathode — Coated Unipotential
Heater Voltage, AC or DC........12.6 Volts
Heater Current ....0.15 Amperes
Maximum plate dissipation, each section........0.5 Watts

AVERAGE CHARACTERISTICS, EACH SECTION

Plate Voltage ....250 Volts
Grid Voltage ....−1.5 Volts
Amplification Factor, Grid to Each Plate........95
Plate Resistance, approximate, Each Plate......76000 ohms
Transconductance, Grid to Each Plate......1250 Micromhos
Plate Current, Each Plate........1.5 ma

BASING DIAGRAM

EIA 9KT

PHYSICAL DIMENSIONS

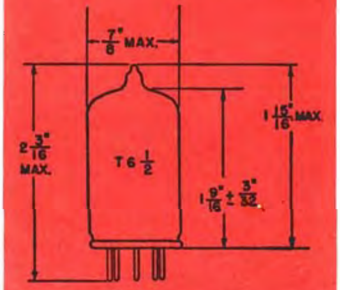

EIA 6-2

HAM NEWS

Available FREE from your G-E Tube Distributor

NOVEMBER–DECEMBER, 1959
VOL. 14—NO. 6

E. A. Neal, W4ITC — Editor

BUILD-IT-YOURSELF IDEAS
from the 999 radio amateurs at
GENERAL ELECTRIC
published bi-monthly by
RECEIVING TUBE DEPARTMENT
Owensboro, Ky.

GE
HAM NEWS

JANUARY-FEBRUARY, 1960

OPERATING G-E HI-FI TUBES AS MODULATORS

By P. E. Hatfield, W9GFS, and R. E. Moe*

The High Fidelity audio equipment boom has spurred development of several new tube types—and improvements in existing types—for audio power amplifier service. Thus, amateurs now have a broad choice of highly efficient tubes for plate modulator service in their transmitters.

The new audio tubes shown at the right are the G-E Receiving Tube Department's new family of high-performance power pentodes designed for both monophonic and stereo high fidelity audio equipment. Keeping pace with the trend to the "pancake" shape in audio equipment, these tubes pack more power capability into compact envelopes than ever before.

A newly developed five-ply bonded plate material (see cross-sectional drawing, Fig. 1), permitted upping the plate dissipation in the 6L6-GC to 30 watts, as compared to 24 watts in the 6L6-GB and older versions. A dramatic demonstration of this new plate material's capability can be seen in the photo showing a 6L6-GB and a 6L6-GC, running side-by-side with each plate dissipating 80 watts! Note the "hot spots" — actually a bright orange in color — on the 6L6-GB plate at left. The new five-ply plate in the 6L6-GC at right is uniformly heated to a dull red color (although it appears black).

The new 7581 beam pentode — electrically similar to the 6L6-GC, but with a low-loss mica-filled base — has the five-ply plate too. Another new pentode with the five-ply plate, the 7355 for audio amplifiers in the 20-30 watt power range, packs 18 watts of plate dissipation into an envelope having a seated height of only 3 inches. The 7189A miniature pentode also has a plate made of the five-ply material.

The 6BQ5 and 7189A pentodes — plus the new 6DZ7 twin pentode, which is equivalent to two 6BQ5's in one envelope — round out

(continued on page 7)

COMPARISON of plate size in the new 7355 octal beam pentode (left), and the 7189A miniature beam pentode (right). The tubes have design maximum plate dissipation ratings of 18 and 13.2 watts, respectively.

Also in this issue—

—Lighthouse Larry

NEW G-E 7581 beam pentode with low-loss base, and the 6DZ7 twin beam pentode (right). Both the 7581 and the 6DZ7 are only $3\frac{5}{16}$ inches in height when seated in sockets.

SCANNING the SPECTRUM

COMING NEXT ISSUE . . .

The TC-75, a compact 15-watt 3.8 to 4.0-megacycle mobile transmitter/converter (tucked under the dash of the author's car, above) will be described by W4QVL. This rig is only 3 inches high, 7 inches wide and 5 inches deep. It has five tubes and, with a modern external power supply, draws only 3 amperes from a 12-volt auto electrical system. Don't miss this issue, which also will announce the recipient of General Electric's 1959 Edison Radio Amateur Award for outstanding public service.

G.E.'s LME DEPARTMENT . . .

WA2ANU, K2HLT and W2OIQ, three of the authors in this issue, all hail from General Electric's Light Military Electronics Department, with headquarters in Utica, New York. This department designs and builds an impressive variety of electronic equipment for the U.S. military services.

Included in their products are armament and control systems, radar, counter-measures, communications and navigational equipment for airborne weapons. We can't go into more details here, except to say that this department also participated in the development of the synchronous communications system, better known as double sideband, and now used by many radio amateurs.

CLUB BULLETINS WANTED . . .

Among the many amateur radio club newspapers and bulletins which arrive regularly at the *G-E HAM NEWS* office, we notice some which are statewide, or section-wide in coverage. They include: *Florida Skip; Virginia Ham Bulletin,* and *The Bison,* from Indiana.

This is an excellent means of communicating news of interest to all radio amateurs in a state and, personally, I'd like to see more such bulletins published. I receive a number of newspapers from clubs in exchange for *G-E HAM NEWS.* Welcome them from clubs who may not now be sending them to me.

BRAILLE TECHNICAL PRESS ON RECORDS . . .

A "Talking Book" edition of the only radio and electronics magazine for the sightless radio amateur, hi-fi enthusiast, sound recording technician, radio and TV serviceman, is now available. This edition started with the September, 1959 issue, in celebration of the magazine's tenth anniversary.

I listened to the September record and could easily draw a schematic diagram from the oral description. Write to the editor, Bob Gunderson, W2JIO, at 984 Waring Avenue, New York 69, N. Y., for details.

Bob, incidentally, was the recipient of General Electric's 1955 Edison Radio Amateur Award for outstanding public service. He developed 30 types of auditory test instruments which opened the electronics field to the blind.

ADDRESS YOUR QSL's . . .

Make sure you fully address all QSL cards — operator's name, number and street, city, zone and state — you mail to other radio amateurs. Don't just address them "Amateur Radio W4................, Operator Joe, Anytown, Ky.," or those QSL's may wind up in the "dead letter" file. In some post offices, there happen to be radio amateurs sorting mail, and they may watch for poorly addressed QSL cards for amateurs they know, but don't count on it!

We understand that some amateurs file a change of address form with their local post office, giving just their call letters and city as the old address, and their house number, street and city as the new address. This helps delivery of incoming QSL cards with insufficient addresses to you.

NEW ADDRESS FOR G-E HAM NEWS

In case you haven't noticed, our back-page sign-off on the last few issues has been changed from Schenectady, New York, to the headquarters of General Electric's Receiving Tube Department in Owensboro, Kentucky. Please address your communications to G-E HAM NEWS down heah, suh.

—*Lighthouse Larry*
(Colonel, that is)

ALL-BAND BALUN COIL

By Carl Byler — K2HLT*

Recently the writer was faced with two problems:

1. *Matching the pi-network (unbalanced) output of a transmitter to a doublet (balanced) antenna.*
2. *Limited finances.*

After considerable design work and testing, the All-Band Balun Coil was found to be the answer to the first problem without aggravating the second problem.

THE FEEDLINE BALANCING PROBLEM is common to many radio amateurs since the pi-network is widely employed in transmitters. It has several advantages, among them being low harmonic output to prevent interference to nearby television receivers.

Also, balanced antennas — half wave dipole (doublet), Yagi beams with split driven element, horizontal trap antenna, etc. — are very popular. Since 72 ohm transmitting twin-lead is available at a lower price than coaxial cable — especially the RG11/U type — the balun was built into the transmitter and 72 ohm twin-lead connected from the transmitter to the antenna. The placement is not critical; the balun could easily be located some distance from the transmitter and fed with a coaxial cable (but this defeats our original purpose).

This balun represents a simple autotransformer, tuned to resonance at approximately 14 megacycles by the distributed capacitance of the coaxial cable in the top half of the coil. The Q of the resonant circuit is approximately 200 (hence the low loss). When loaded with a 72 ohm load, the selectivity of the tuned circuit is broadened out to approximately a 30-megacycle bandpass. The transmitter signal is coupled, via the coaxial cable of the top half of the coil, to the bottom half, which is simply a coil to ground. However, this bottom coil is inductively coupled to the top coil (with essentially unity coupling). Each coil feeds one side of the balanced output. Since each half of the coil has equal inductance, the output will be balanced.

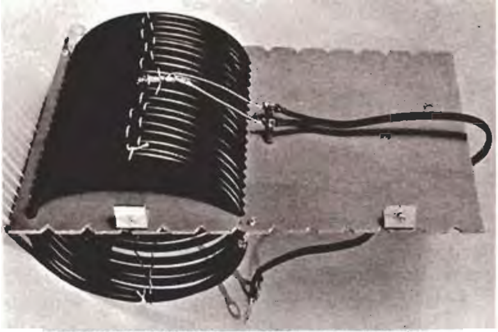

THE ALL-BAND BALUN made from RG-59A/U coaxial cable. The coil "form" is a sheet of laminated insulating board (G.E. Textolite) 15 x 9 x ⅛ of an inch thick. Two rows of 19 holes each are drilled on ⅜-inch centers, with the rows 6 inches apart. A short length of 72-ohm kilowatt twinlead runs to the antenna feedline from the terminal posts at the center of the board. Small angle brackets fasten the balun coil into the transmitter cabinet.

CONSTRUCTIONAL DETAILS for the balun coil are shown in Fig. 1 and the side view photo. The phenolic board is drilled for the cable, chassis type coaxial cable connector (SO-239) and terminal posts. The coaxial cable for each coil is threaded through the holes and then soldered connections are made. Approximately 30 feet of RG-59/U cable are required for the balun illustrated.

The RG-59A/U coaxial cable used happened to be available. Actually, the attenuation would be slightly less with a larger coaxial cable; also the maximum voltage rat-

(continued on page 6)

FIG. 1. SCHEMATIC DIAGRAM and constructional details of the balun coil. One side of the 72-ohm balanced output connects to the shield on the coaxial cable in the upper coil; the other side connects to the center conductor. Inner and outer conductors of the coaxial cable in the lower coil are connected together at each end, and grounded at the bottom end.

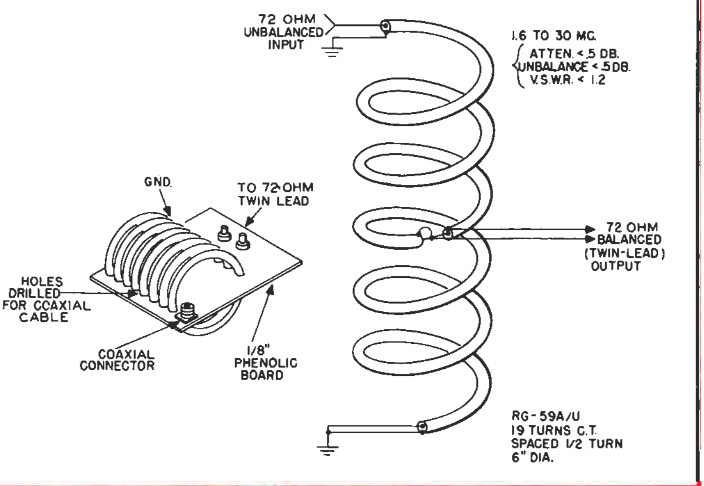

---

* K2HLT is an engineer with the Light Military Electronics Department, General Electric Co., Utica, N. Y.

SIMPLIFIED COIL DESIGN (Part I)

By B. H. Baldridge, W2OIQ•

PROBLEM — HOW TO WIND COILS accurately for specific amateur radio applications. Solutions:

1. Calculating the coil inductance and dimensions from the formula

$$L_o = \frac{2.54 \times 0.03948 \left(\frac{2}{d}\right)^2 n^2K}{1}$$

— too complicated; forget it.

2. Estimating inductance with reactance charts, plus a coil nomograph. Usually after winding, finished coil must be pruned to the correct inductance value to compensate for inaccuracies.
3. Simplified graphs which can be prepared with equipment found in most amateur radio stations.

Solution 3 takes the "try" out of "cut and try" coil winding. The materials needed are: 1) Log graph paper (K & E No. 359 — 110, log 2 x 2 cycles, or equivalent); 2) calibrated receiver; 3) two-terminal oscillator (see Fig. 1 for a Franklin oscillator circuit); and 4) at least two calibrated fixed capacitors in the range of 20 and 150 mmf. Access to a "Q" meter will permit all of the measurements to be made with no additional equipment; or, a calibrated grid-dip oscillator will take the place of the calibrated receiver and two-terminal oscillator.

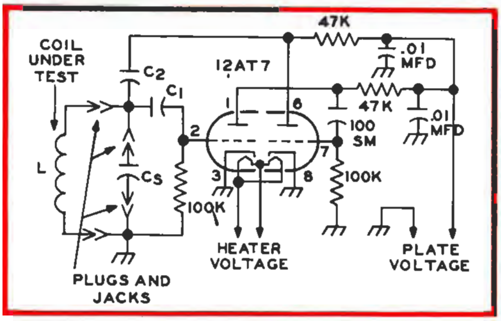

FIG. 1. SCHEMATIC DIAGRAM of a Franklin oscillator with which the measurements outlined in the text may be made. All resistances are in ohms, all capacitances are in mmf, unless otherwise specified. Capacitances C_1 and C_2 should be as small as will permit maintenance of oscillations, usually 1 or 2 mmf each. Values for C_S are given in the text.

Suppose a coil 1 inch in diameter and 1½ inches long, having 30 turns, is available; and our standard capacitors are C_{S1} = 19 mmf, and C_{S2} = 160 mmf. Connecting the coil to the Franklin oscillator, we can find the resonant frequency by locating the frequency of oscillation. If, with C_{S1} across the coil, the oscillation frequency is measured at say 9 megacycles; with C_{S2} across the coil it would be 3.5 megacycles. This information could also be obtained by connecting the coil to a "Q" meter; or measuring resonance of the coil across the test capacitors with the grid-dip oscillator.

Plot this information on log-log graph paper and connect the two points with a straight line, as shown in Fig. 2. Note that to tune from 3.5 to 4 megacycles requires an approximate capacitance variation from 162 to 121 mmf, or a spread of 41 mmf. A total fixed, distributed and tuning condenser minimum capacitance of 121 mmf, and a variable capacitance of 41 mmf would spread the 3.5-

(continued on page 6)

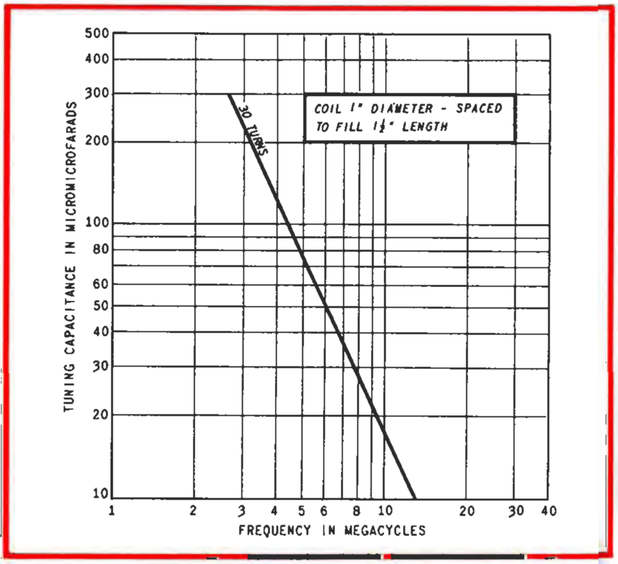

FIG. 2. GRAPH PLOTTED on log paper for a coil, 1 inch in diameter and 1½ inches long, with 30 turns equally spaced. The tuning range with a 140-mmf variable capacitor is approximately from 3.5 to 9 megacycles.

•W2OIQ is a consulting engineer in the Communication and Navigation section of General Electric's Light Military Electronics Department, Utica, N. Y.

FIG. 3. EXAMPLE OF DESIGN procedure for coils 1 inch in diameter and 1½ inches long, with total turns ranging from 100 (67 turns per inch) down to 3 (2 turns per inch) turns. Accuracy is excellent up to about 200 megacycles since method outlined in text takes into account distributed capacitance and other sources of error usually neglected because of calculation difficulty.

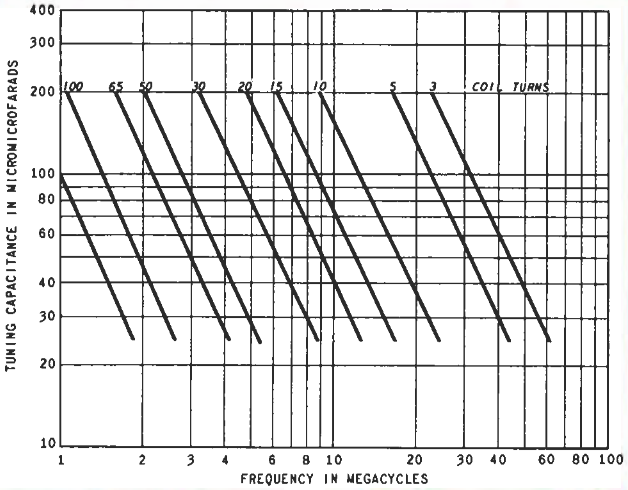

FIG. 4. FAMILY OF CURVES for coils wound on the National XR-50 slug-tuned coil form (⅜ of an inch in diameter; 11/16 of an inch winding length). The area enclosed by dotted lines to the left of each solid line indicates approximate change in inductance possible with XR-50 iron slug. Copper slug produces inductance shift in opposite direction.

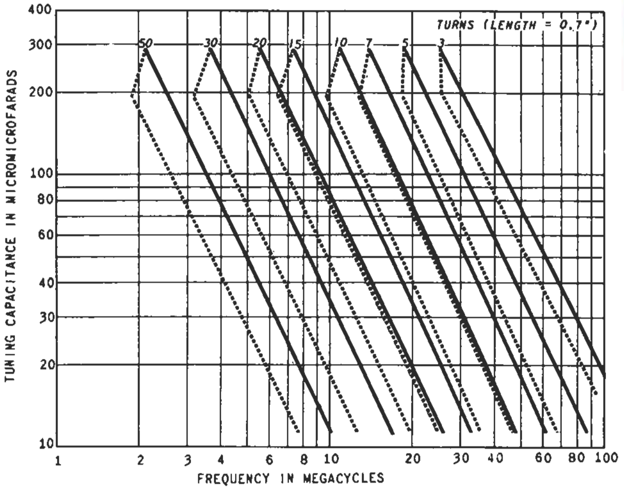

FIG. 5. COIL DESIGN CHART for Cambion LS-3 slug-tuned coil forms with combination iron/brass tuning slugs (⅜ of an inch in diameter; ¼ of an inch winding length). The solid lines indicate the inductance when the brass slug is within the coil; and, the dotted broken lines indicate the inductance with the iron slug within the coil.

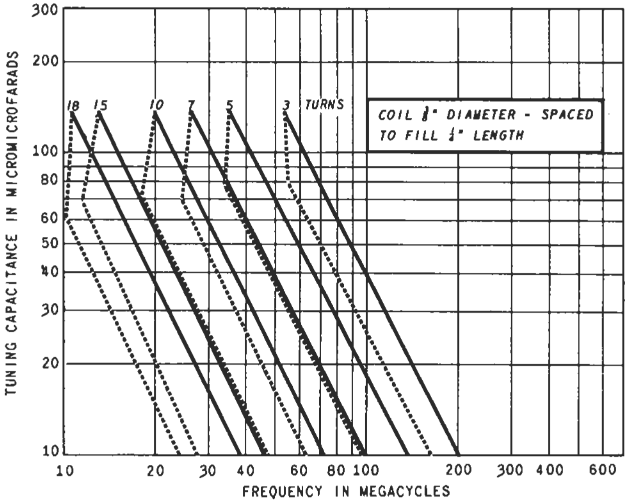

SIMPLIFIED COIL DESIGN

(continued from page 4)

megacycle band over 180° shaft rotation. The same coil will tune from 7.0 to 7.3 megacycles with an approximate capacity variation from 36.5 to 33.5 mmf, or a spread of 3 mmf. A total fixed, distributed and tuning condenser minimum capacitance of 33.5 mmf and a 3-mmf variable would spread the 7-megacycle band over 180° shaft rotation. If the distribtued and input capacity add up to 12 mmf, a 150-mmf variable will tune both the 3.5 and 7-megacycle bands. A parallel 50 mmf variable and a fixed 100 mmf capacitor would make it impossible to tune the circuit to 7 megacycles, and the use of a 50 mmf variable alone would prevent inadvertent tuning to 3.5 megacycles in lieu of 7 megacycles. If the total input, output, and distributed C equals 15 mmf, the coil will tune to 10.5 megacycles and will drive a doubler to 21 megacycles.

The system can be further expanded by plotting coils with different parameters as shown in Fig. 3, which illustrates a typical family of curves for coils 1 inch in diameter and 1½ inches long.

Graphs for each individual coil of given number of turns are constructed as described. Note that the spacing between the graphs for the coils is proportional to the log of the number of turns. A slight slope change and bending of the individual coil plots is noted as the frequency approaches the natural resonant frequency of the tuning element, due to the increased proportional effect of the distributed capacitance, coil leads and terminals, and other factors impossible to eliminate and difficult to calculate in practical coil problems. These factors are usually neglected on impedance charts, making the charts useless for practical applications requiring accurate construction of small inductances.

Precise determination of coil parameters can be obtained by limiting the use of a given chart to a 10-to-1 turns ratio when determining coil parameters from data taken with coils of a few turns. Figs. 4 and 5 show a similar family of curves for widely used commercial coil forms. The inductance variation made possible by positioning the slugs is illustrated by the dashed lines.

A useful chart for clipping coils such as B & W Miniductors can be made from a couple of assorted lengths of the size in question. The fact that length and number of turns are changed simultaneously does not void the chart; the slope remains the same but the spacing between graphs of the coils will be slightly changed.

Any number of similar charts may be rapidly prepared. From two or more experimentally plotted graphs of individual elements approximately within the desired range, a family of curves may be drawn to permit accurate selection of the desired tuning elements. Frequency doublers or power amplifiers thus may be accurately ganged.

Note that for a small increment of frequency, such as a typical amateur band, the use of fixed capacitors to set the operating point and a small variable straight line capacitance will give essentially straight line frequency tuning. The ganging of circuits with straight line tuning is no problem. As charts for progressively larger power coils or doubler coils all have the same slope, the choice of capacitors and inductors to gang and track tuned circuits becomes elementary.

(Part II will appear in a subsequent issue — Ed.)

ALL-BAND BALUN COIL

(continued from page 3)

ing (2300 volts for RG-59A/U) would be higher. However, the loss in this model is negligible and the voltage is low (under 1300 volts peak to peak for a one-kilowatt amplitude modulated transmitter) as long as the balun is kept loaded.

Other 72 ohm coaxial cables, such as RG-8/U, RG-11/U, RG-12/U, RG-13/U, RG-15/U, RG-34/U, and RG-35/U may be used in a balun of this type. The coil usually must be redesigned to compensate for the different characteristics of the cable, such as the outside diameter. The procedure in this case would be to adjust the length and size of the coil to resonate at 14 megacycles, while maintaining the required bandwidth under loaded conditions.

This balun was tested with both low level (signal generator) and high level (pair of 813's plate modulated by a pair of 813's) signals. From 1.8 through 30 megacycles, the voltage standing wave ratio (V.S.W.R.) was measured to be less than 1.2:1. The unbalance and insertion loss were measured and found to be less than 0.5 decibels.

The balance was checked with high power by attaching two 200-watt light bulbs — one on each side of the 72 ohm balanced line to ground. The transmitter lighted both bulbs equally to full brilliance with less than 500 watts DC input to the 813's.

As proof of the pudding, the writer finished and installed the assembly about 10 o'clock on a Friday night. After loading the transmitter through the balun into a simple doublet antenna, he called "CQ" on the crowded 14-megacycle phone band. Before retiring at 11 o'clock, numerous QSO's were completed, with the weakest signal report received being 10 db over S9 from San Francisco.

HOW TO GET *G-E HAM NEWS* . . .

G-E HAM NEWS is available free of charge if you pick it up from your local **G-E** Tube distributor. Some distributors mail copies locally to their customers. Or, for those who prefer receiving copies directly from us, we have a low-cost subscription plan at $1.00 per year. Order your subscription from: **G-E HAM NEWS**, General Electric Company, Receiving Tube Department, 316 E. Ninth Street, Owensboro, Kentucky, U.S.A.

OPERATING G-E HI-FI TUBES AS MODULATORS

(continued from page 1)

this hi-fi tube family. These tubes normally are rated in the technical data for push-pull class AB$_1$ operation at low harmonic distortion — about 2 percent — in high fidelity amplifier service. These ratings are given in the "Hi-Fi Service" columns in Table I.

Plate modulator service in amateur transmitters, however, usually permits the audio power tubes to be operated with higher distortion — up to about 10 percent — in the output. This allows the modulator tubes to be driven harder — up to the maximum ratings — with a resultant 25 to 90-percent increase in power output, depending on tube type.

A session with the "OPERATION CHARACTERISTICS" curves on the *DESCRIPTION AND RATING* sheets for these tubes resulted in the figures listed in the "Modulator Service" columns in Table I. These operating conditions are all within the "MAXIMUM RATINGS" listings for each tube type. A typical class AB$_1$ amplifier circuit is used to obtain this data.

A 24-watt modulator with a single tube output stage can be built around a 6DZ7 twin pentode, operated with 400 volts on the plates. Or, a pair of 6BQ5's can be substituted if desired. For high power output at a moderate 400 plate volts, a pair of 7355's will deliver 54 watts of audio power. These figures do not include output transformer losses.

Plan your new plate modulator around the above tubes. As makers of high fidelity equipment can verify, they really deliver the watts, and with low distortion too.

*W9GFS is an engineer in the Technical Data Unit, and R. E. Moe is the Manager of Engineering in General Electric's Receiving Tube Department, Owensboro, Ky.

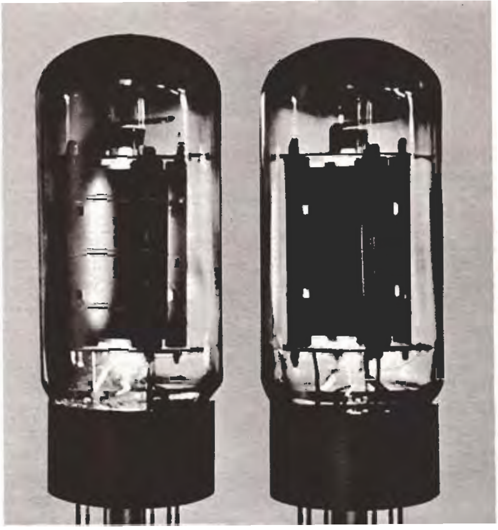

UNRETOUCHED PHOTO showing a 6L6-GB (left) and a new 6L6-GC (right) with five-ply bonded plate material, each operating at a plate dissipation of 80 watts. The 6L6-GB has "hot spots" on the plate, bright orange in color, while the plate of the 6L6-GC shows only a uniform dull red, due to the superior heat dissipating characteristics of the new material.

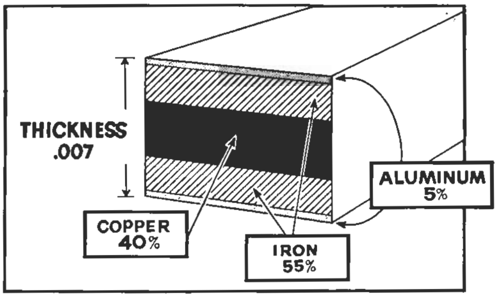

FIG. 1. CROSS-SECTIONAL VIEW of G. E.'s new five-ply bonded plate material. The metal "sandwich" gives better heat conduction and radiation than conventional single-layer anode materials.

TABLE I — COMPARISON OF HI-FI AND MODULATOR SERVICE

PUSH-PULL CLASS AB$_1$ AMPLIFIER, VALUES FOR TWO TUBES

TUBE TYPE	1 — 6DZ7 2 — 6BQ5 2 — 7189A		2 — 6L6-GC 2 — 7581		2 — 7355		
	Hi-Fi Rating	Mod. Rating	Hi-Fi Rating	Mod. Rating	Hi-Fi Rating	Mod. Rating	
Plate Voltage	400	400	450	450	300	400	Volts
Screen Voltage	250	250	400	400	250	300	Volts
Grid-Number 1 Voltage	—11	—11	—37	—37	—21	—32	Volts
Peak AF Grid-Number 1 Voltage	22	26.4	70	85	42	70	Volts
Zero-Signal Plate Current	80	80	116	116	100	72	Milliamperes
Maximum-Signal Plate Current	100	110	210	240	185	244	Milliamperes
Zero-Signal Screen Current	4.0	4.0	5.6	5.6	5.5	4.6	Milliamperes
Maximum-Signal Screen Current	13	16	22	30	24	30.4	Milliamperes
Effective Load Resistance, Plate-to-Plate	9000	9000	5600	5600	4000	3500	Ohms
Total Harmonic Distortion[1]	2.5	5	1.8	7	2.0	5.8	Percent
Maximum-Signal Power Output[2]	18	24	55	70	28.5	54	Watts

[1] Without feedback.
[2] Power output figures quoted do not include losses in output transformers usually encountered in practical circuits.

A FEEDLINE TEST FOR TRANSMITTER PARASITICS

By D. T. Geiser — WA2ANU*

TRANSMITTERS that are stable under CW or no-modulation conditions sometimes break into parasitic oscillation or other instability when amplitude modulated. The test described here has proved useful in checking for instability during modulation peaks.

Ideally, transmitters should be tested feeding dummy loads before on-the-air operation. If such a test is made, one simple additional test permits a simultaneous check for parasitics. This modification consists of shunting the dummy load with a parallel-tuned circuit. If tuned to the operating frequency and having a moderate Q, the added circuit is electrically invisible at the desired frequency but very much in evidence at other frequencies.

Thus a standing wave ratio (SWR) bridge will indicate a normal standing wave ratio if only a pure modulated output wave is present. If parasitics or off-frequency oscillation occurs during modulation, the SWR meter will kick because the tuned circuit (L-C) is not resonant at other frequencies. The test circuit used successfully at WA2-ANU is shown, Fig. 1.

If an antenna system is matched to a low standing wave ratio and resonant, the SWR meter by itself may be used to show the presence of spurious output on the feedline.

This test is mainly useful to check massive errors and should not be considered a valid check for very low power parasitics and harmonics.

---

*WA2ANU is a components engineer with General Electric's Light Military Electronics Department, Utica, N. Y.

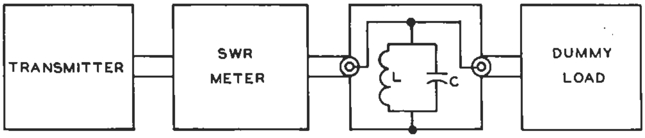

FIG. 1. BLOCK DIAGRAM of parasitic test circuit. Tuned circuit L/C is tuned to the operating frequency. Capacitor C should be about 5 mmf per meter (400 mmf for 80 meters; 40 mmf for 10 meters). Off-frequency emissions are shown up by an indication of reflected power on the SWR meter.

HAM NEWS

JANUARY-FEBRUARY, 1960

VOL. 15 — NO. 1

BUILD-IT-YOURSELF IDEAS
from the 999 radio amateurs at
GENERAL ELECTRIC

published bi-monthly by
RECEIVING TUBE DEPARTMENT
Owensboro, Ky.

Available FREE from your
G-E Tube Distributor

E. A. Neal, W4ITC — Editor

HAM NEWS

MARCH-APRIL, 1960

THE TC-75

A MOBILE TRANSMITTER/ CONVERTER FOR 3.9 MC.

By F. J. Pinkerton, W4QVL*

When the average radio amateur considers building a mobile rig, he is faced with several questions that must be answered, such as:

1. How much power?
2. How many bands?
3. VFO or crystal controlled?
4. Space requirements?
5. Type of converter for receiving?
6. Will it please the XYL?

In my case the first three questions were easy. I knew exactly what I wanted, a low power, 3.9-megacycle crystal-controlled transmitter. Question 4 was a stickler; I had a 1959 "No-roomobile," and by solving the space problem, I answered questions 5 and 6.

The TC-75 is a 3.8 to 4.0-megacycle, 15-watt crystal-controlled transmitter and a crystal-controlled converter in a single package only 7 x 3 x 5 inches in size. The unit was painted to match the color scheme of the car's interior; this, plus the small size, cer-

(continued on page 3)

Also in this issue—

—Lighthouse Larry

---

* W4QVL is a design engineer in Standard Mobile Design Engineering at General Electric's Communication Products Department, Lynchburg, Virginia. This department produces the famous "Progress Line" of two-way mobile radio equipment.

SCANNING the SPECTRUM

COMING NEXT ISSUE . . .

. . . information on new rectifier tube types, and details on a pi-network type antenna tuner, and a simple accessory which permits monitoring of transmitter signals on almost any test oscilloscope. This issue will be available from your G-E Tube distributor about May 1 — and if he doesn't have copies, ask him to order a quantity for your local radio amateurs.

73 TO FORM 73B . . .

Our well-known Log Form blank QSL card (labeled Receiving Tube Department Form 73B) will be discontinued when the present stock of cards runs out. We have about a four-month supply left, but when these are gone, there will be no more.

The minimum quantity is 250 cards, which sell for $1.00 postpaid. Order larger quantities in multiples of 250 cards (and dollars, too). Make checks and money orders payable to "General Electric Company," and address your letter to me in Owensboro, Ky.

CIRCUIT CHANGE . . .

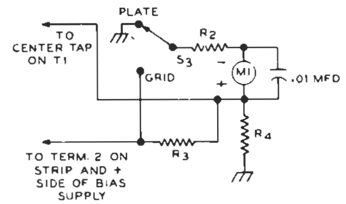

The plate current metering circuit for the GL-813 KILOWATT GROUNDED-GRID LINEAR AMPLIFIER (See **G-E HAM NEWS**, November-December, 1959, Fig. 1, page 4) should be connected as shown above. Complete details are available in a bulletin, which also has additional construction and component information.

WANTED: HAM COLUMNISTS . . .

Does your club want continuous publicity about the activities of radio amateurs in your community? Try establishing a regular column on amateur radio in your local newspapers.

A pioneer such column is "HAM ANTENNA," which appears in every Sunday edition (circulation: over 500,000) of the *Cleveland Plain Dealer*. It is compiled by Harry A. Tummonds, W8BAH, and includes happenings in the fifteen amateur radio clubs in the Cleveland area, get-acquainted information on amateur radio for the public, and newsy items about the local hams.

Harry, incidentally, is a G-E Tube distributor, and makes several hundred copies of *G-E HAM NEWS* available to radio amateurs in his area.

If your club now publishes a club paper, many of the items therein could be rewritten into a newspaper column. Try it and let the public know about the good work we hams are doing in their interest.

EDISON AWARD SPECIAL CITATIONS

In addition to the principal 1959 Edison Radio Amateur Award to W8AEU (see page 12), Special Citations were awarded to the following radio amateurs, recognizing their outstanding public service in 1959:

W3BHK — J. William Bennett, Washington, D.C.;
W6MEZ — Raymond E. Meyers, San Gabriel, Calif.;
W7BA — Loyd Peek, Seattle, Washington;
W0KQD — Mrs. Irene H. Craft, Alamosa, Colorado;
CHICAGO AMATEUR RADIO DISASTER CORPS — a group headed by W9NOE, Richard D. Cortwright; and Leslie E. Tanner, W9ING, of Chicago, Ill.

Congratulations to these amateurs, and my thanks to all persons who participated in the Eighth Annual Edison Award program.

435 MILLION TUBES . . .

. . . yes, that's the number of receiving tubes expected to be placed in service by the electronics industry in the United States during 1960, according to a recent forecast by L. B. Davis, General Manager of G.E.'s Electronic Components Division.

We've been "guesstimating" how many of these tubes will go into new amateur radio equipment — and as replacements in existing gear — and our figure is over a million.

The forecast also reports power tube sales up to 10 percent, transistor usage up to 130 million units, and nearly 13 million television picture tubes to be placed in service. Receiving tubes, however, will remain as the mainstay of the electronic components industry, at the same level as in 1959.

Tunnel diodes, which were first introduced by General Electric in 1959, will continue to be widely discussed and experimented with during 1960, but samples will be limited to small quantities pending development of circuits.

G-E tunnel diodes are made by our Semiconductor Products Department in Syracuse, N.Y.

—*Lighthouse Larry*

THE TC-75

(continued from page 1)

tainly filled the bill for question number 6.

The circuit of both the transmitter and converter, shown in Fig. 1, is straightforward and no complications should result if care is taken in the layout and wiring. One half of a 12AT7 is the crystal-controlled oscillator with a slug-tuned coil and fixed capacitor in the plate circuit. This drives a 6360 twin pentode with both sections in parallel. (Ed. note: A 5763 single pentode can be used in this transmitter in place of the 6360 twin pentode at the 15-watt input raing.) The tank coil is slug-tuned, with a fixed mica capacitor across it eliminating the bulky tuning capacitor usually required. A variable padding capacitor, C_1, in series with the output link coupling coil, L_3, is used to adjust the loading on the final stage. Two sets of contacts on the 4-pole, double-throw transmit-receive relay (K_{1A} and K_{1B}), switch the antenna from the transmitter to converter, and short out the input coil of the converter when the relay is in the transmit position.

Plate modulation of the 6360 final amplifier is accomplished with a 12AX7 twin triode.[1] The other half of the 12AT7 is an audio voltage amplifier, driven by a carbon microphone

(continued on page 5)

TABLE I — PARTS LIST, TC-75

C_1	65-340 mmf ceramic padder. (El Menco 303)
C_2	275-970 mmf ceramic padder. (El Menco 306)
F_L	50 turns, ½ inch in diameter wound in two layers, No. 16 enameled wire, self-supporting.
I_1	6 volt, 250 ma pilot bulb (#44) and bracket.
I_2	12 volt pilot bulb (#53) and bracket.
J_1	4 pin jack for microphone.
J_2, J_3	Midget Phone type jack.
K_1	4 pole, 2 position miniature relay, 6-volt DC coil (Potter & Brumfield MH17D-6V).
L_1, L_4, L_7	36-64 microhenry coil, slug tuned (North Hills PF-120F).
L_2	Coil, slug tuned, 30 turns, No. 20 enameled wire, close wound. (Form is CTC PLS7).
L_3	7 turns wound over grounded end of L_2, No. 20 enameled wire.
L_5, L_6	7 turns wound over grounded ends of L_4 and L_7, No. 30 enameled wire.
M_1	0-200 microamp, 1-inch diameter milliameter. (International 100).
P_1	8 pin male octal plug and chassis plate (Amphenol 86CP8 with 12-001-03 plate).
R_1	32 ohms, 1 watt (1-68 and 1-56 ohm, ½-watt resistor in parallel).
R_2	2 ohms, 1 watt (2-5.6-ohm and 1-6.8 ohm ½ watt resistors in parallel).
S_1	3 pole, 2 position miniature rotary switch.
S_2	Double pole, 2 position toggle switch.
T_1, T_2	Surplus 3-winding transformers; see footnote 2 on page 5 (Triad A-81X also suitable for T_1; Triad A-1X suitable for T_2).
T_3	Modulation transformer; primary, 10,000 ohms, center-tapped; secondary, 5,000 ohms, 10 watt-rating (Triad M-1X, or equivalent).
X_1	3800-4000 kc crystal (FT 243 case) for desired transmitter frequency.
X_2	2500-3250 kc crystal, or 4550-5300 kc crystal (FT 243 case) for converter.

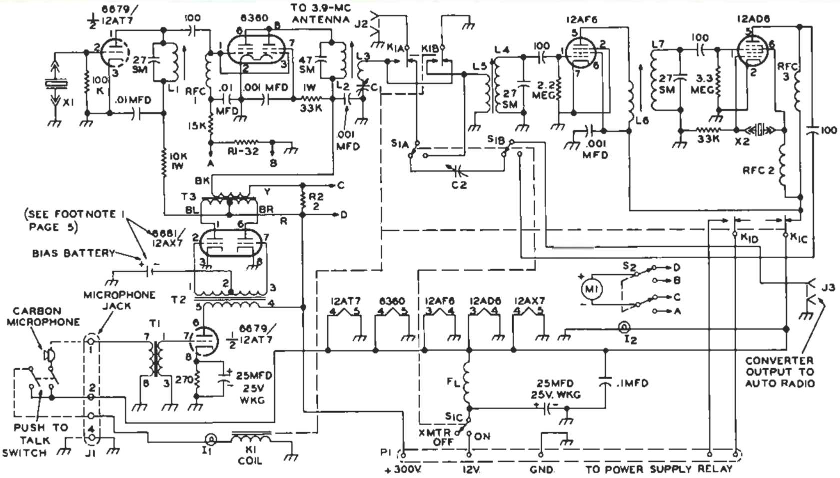

FIG. 1. SCHEMATIC DIAGRAM of the TC-75 transmitter/converter. The transmitter and modulator are at the left; and the crystal-controlled converter is at the right. Capacitors are in mmf, unless otherwise noted; silvered micas are marked "SM." Resistances are in ohms (K = 1000), ½ watt rating if not marked 1 watt, or 2 watts.

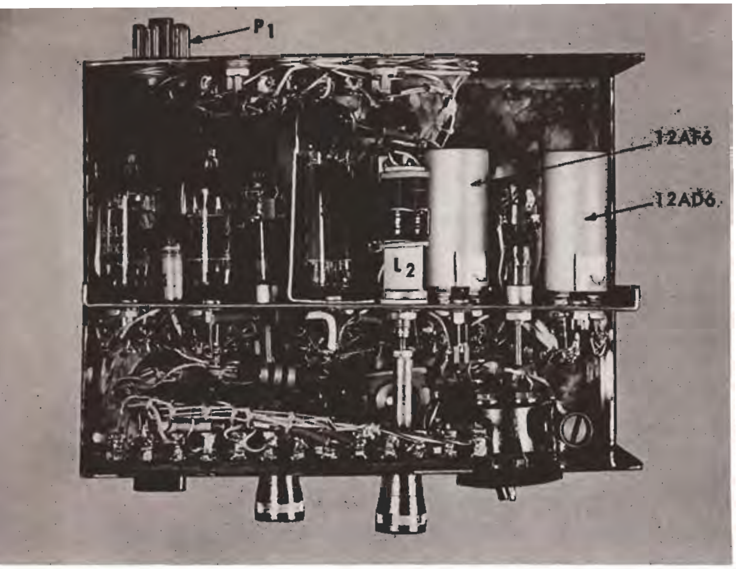

TOP VIEW OF THE TC-75, showing the location of major components in the cabinet. The parts placement allows sufficient room for tubes to be removed from their sockets.

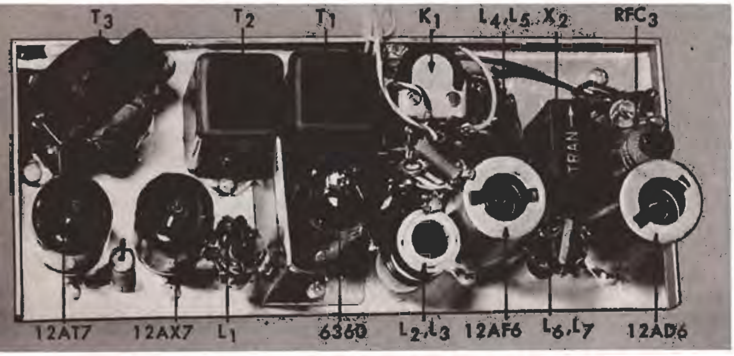

REAR VIEW of the center chassis. Note the r.f. shield between the 6360 tube and the 12AT7 oscillator tube. The cabled leads at the top of the picture run to the parts and controls on the front panel. Power connections to P_1 on the cabinet are included in this cable. The antenna lead runs directly from relay contacts K_{1A} to J_2 on the rear panel.

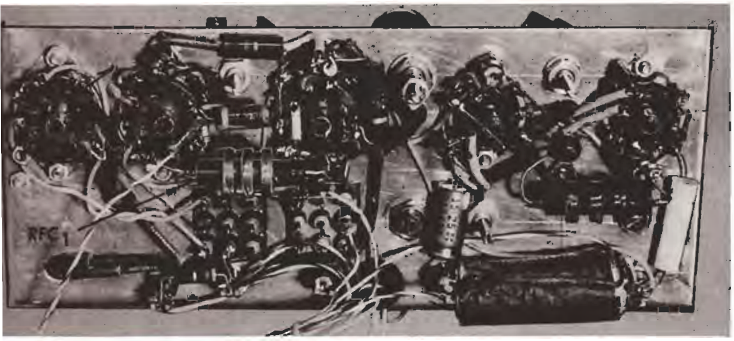

FRONT VIEW of the center chassis, showing the wiring and placement of small parts around the tube sockets. The nine terminals on T_1 and T_2 can be seen through the ¾ x ¾-inch square cutouts in the chassis for these components.

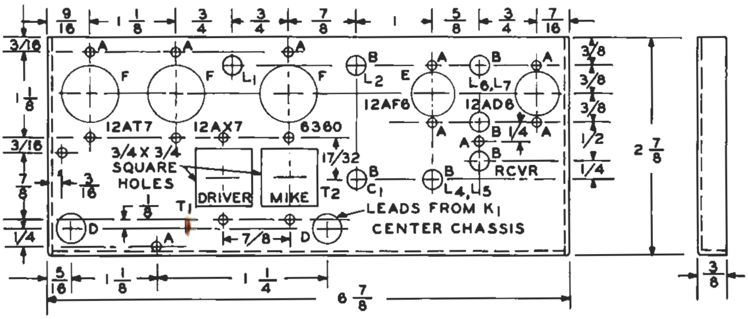

FIG. 2. DRILLING DIAGRAM for the center chassis. All holes sizes identified on the diagram by letter are given in TABLE II. Over-all size of the aluminum sheet should be 7¾ x 3$\frac{5}{16}$ inches, to allow for the ⅜-inch wide lips, plus bends.

THE TC-75

(continued from page 3)

through a matching transformer (T_1). Microphone voltage is obtained from the 12-volt DC supply.

The converter has two of the "hybrid" tubes that require only 12 volts on the plates and screens. A 12AF6 pentode is the RF amplifier, and a 12AD6 pentode is the mixer and crystal-controlled oscillator stage. The crystal is in a Pierce type circuit with the 12AD6 screen grid as the plate of the oscillator. A padder capacitor, C_2, in series with the antenna coil, L_5, permits the 3.9-megacycle whip to be used as a broadcast receiver antenna.

TRANSFORMERS T_1 and T_2 are of a surplus variety and advertised by several firms[2] as good for phasing type single sideband exciters; phone patches, microphone transformers, interstage transformers and other uses. They have three windings, each center tapped, one having high impedance, one medium impedance and one low impedance winding.

The relay, K_1 has a 6-volt coil, connected in series with a No. 44, 6-volt pilot lamp, I_1. If a 12-volt relay is available, a pilot lamp rated at 12 volts (No. 53), should be wired in parallel with the relay coil.

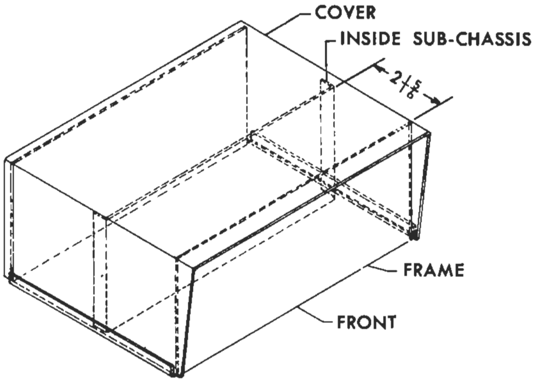

FIG. 3. ASSEMBLY DRAWING of the cabinet top and bottom, showing the position of the center chassis in the cabinet. The cabinet and chassis are fastened together with self-tapping screws.

THE CABINET for this model is home-fabricated, but any of the commercially available 7 x 5 x 3-inch aluminum boxes (LMB No. 145 interlock type; or No. SL-145 snaplock type) can be used to house the TC-75 instead. This type of box is excellent for this application; the part with the small flanges forms the *cabinet*, with one 7" x 3" side as the front, and the other as the rear. The other part of the box forms the *cover* and is mounted under the dash by appropriate holes drilled to match existing bolts in the car.

Drill and mount all the components on the front and rear panels. A terminal strip is placed on the inside top edge of each panel to terminate the wires from the parts. The front panel should have 13 terminals, and the rear panel, 5 terminals. Cabled wires connect each of these terminal strips to proper place on the center panel.

(continued on page 11)

TABLE II — DRILL AND PUNCH SIZES

LETTER ON DIAGRAM	DIAMETER OF HOLE (inches)	TOOL
A	0.116	No. 33 drill
B	1/4	drill
C	5/16	drill
D	3/8	drill
E	5/8	punch
F	3/4	punch
G	1	punch
H	1 1/8	punch

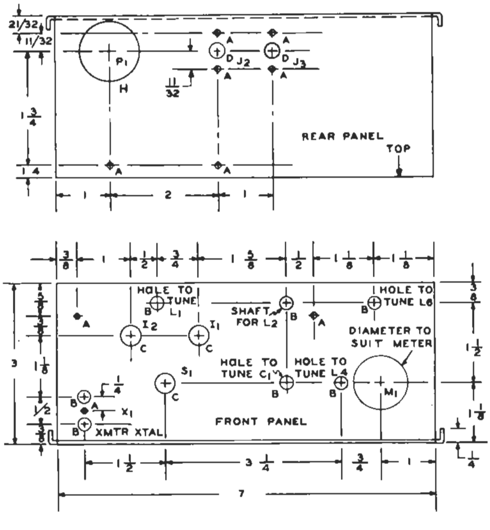

FIG. 4. DRILLING RIAGRAM for the front and rear sides of the cabinet bottom. Hole sizes are given in TABLE II, and are for the components actually used in constructing this model.

---

[1] The 12AX7 twin triode (G-E 6681 Communication tube type; or, 5751 G-E Five-Star tube type) is designed primarily for class A audio voltage amplifier service. However, in experimental amateur service, the short operating periods and intermittent waveform of voice audio signals usually will not overload a 12AX7 when operated as a class B audio power amplifier delivering up to 7 watts output. The 12AX7 is not recommended for commercial service in this application.

To obtain more power output from the class B stage in the TC-75, connect two 12AX7 tubes in push-pull parallel. Or, substitute types 12AT7, 12AU7, or 12BH7, all having higher plate dissipation ratings, and higher power output capability (be sure to apply the correct grid bias voltage for these types).

The 12AX7, because of its high mu, may be operated as a zero-bias class B amplifier up to 200 plate volts. From 220 to 300 plate volts, apply —1.5 volts grid bias. Over 300 plate volts, apply —3 volts grid bias in the driver transformer (T_2) center tap, as shown in the schematic diagram, Fig. 1.

[2] Transformers T_1 and T_2 can be obtained from Burnstein-Applebee, Kansas City, Mo. (Cat. No. 18C647); or, from Barry Electronics, 512 Broadway, New York 12, N. Y.

T_1 becomes a microphone transformer by using the low-impedance winding (terminals 7 and 9) for the microphone, and the high-impedance winding (terminals 1 and 3) for the 12AT7 grid. For the driver transformer, T_2, the medium-impedance winding (terminals 4 and 6) is used for the 12AT7 plate, and the high-impedance winding (terminals 1 and 3) and its center tap (terminal 2) drives the 12AX7 grids.

GENERAL ELECTRIC ENTERS CITIZENS RADIO FIELD

— Introductory Class D Prices for Hams

A pioneer of three decades as a manufacturer of its own mobile radio products, General Electric Company has broadened its communications line by adding E. F. Johnson's *Viking Messenger* to G-E products sold nationally through several hundred manufacturer's representatives.

Announcing the action, Kent J. Worthen, W4EYE, national sales manager for General Electric two-way radio equipment, explained that G-E's own current factory programs at Lynchburg, Va., are aimed at providing communication devices to meet the expanding needs of governmental agencies, military services, municipalities and businesses requiring maximum equipment performance in the commercial VHF and UHF communication bands.

"In providing a complete communications line," Worthen points out, "we feel the need to include 27-megacycle equipment to serve the growing Citizens Radio market. The Class D Citizens Band rules, of course, provide for amplitude-modulated equipment, which General Electric has not produced for several years. For this reason, we elected to distribute Johnson's *Viking Messenger* rather than divert production to AM devices at this time."

General Electric two-way radio sales offices in all parts of the United States, including Alaska and Hawaii, will sell the *Messenger* equipment and the units will be installed and serviced by General Electric's extensive network of authorized independent service stations.

H. N. McNeill, national product service manager for General Electric Communication Products Department, Lynchburg, said the *Messenger* was subjected to intensive field tests by General Electric. The Johnson firm is one of the country's recognized leaders in the manufacture of ham radio transmitters and began a Citizens Band development program in 1958 which culminated in the introduction of the present *Messenger.*

"Our experience with the *Messenger* to date," McNeill says, "is that its quality is outstanding. Because there have been no particular service problems associated with the equipment, in most instances our independent service stations will be able to provide maintenance at a routine minimal charge, so the owner of the unit will know immediately what the costs will be."

Under FFC rules, 23 Citizens Band channels are available in the 27 megacycle range. Equipment may be obtained for personal or business use by any U.S. citizen 18 years of age or older, subject to FCC licensing.

Regulations for Citizens Band differ from Ham bands in that the person transmitting must be attempting to call a specific person and not trying to stimulate conversation with anyone who happens to be on the air. Each message must meet a specific communications need. However, personal talk between auto and home, between home and boat, or similar points is allowable. It is in this area of communications that much of the equipment manufactured to date has been used.

The *Messenger* is compact, lightweight and exceptionally easy to install anywhere. The complete transceiver measures just 5⅝ inches high, 7 inches wide, 11⅜ inches deep.

Space is included in the unit for five of the 23 available Citizens Band channels. By simply moving the selector switch on the front panel to the desired position, any one of the five may be selected for operation.

The equipment as designed is not operative in ham bands. However, the E. F. Johnson Company says the *Messenger* can be adapted to a 10-watt 28-megacycle transceiver with some changing. It involves some coil retuning, changing two resistors and adding one wire. (Further information on this subject can be obtained by writing directly to Customer Service Dept., E. F. Johnson Company, Waseca, Minn.)

Normally, crystals for one Citizens Band channel are supplied with the standard *Messenger* package at $139.75, which includes the unit, furnished with microphone and cord and necessary power cords.

However, as a special introductory offer for readers of *G-E HAM NEWS*, the General Electric Communication Products Department will make available the standard package (Model J242-128, 12 volts DC/115 volts AC; or Model J242-127, 6 volts DC/115 volts AC), at $139.75 with four extra crystals and a high efficiency short collapsible chrome-plated antenna that mounts on the back of the *Messenger*. These four crystals and antenna will be included at no extra cost on cash orders sent directly by hams to the General Electric Communication Products Department, Box 4197 Lynchburg, Va., with postmarks no later than May 31, 1960.

Checks should be made payable to General Electric Company. Model J242-128 (12 volt/115) or Model J242-127 (6 volt/115) should be specified. Full remittance should be included with orders (No C.O.D.'s, please).

The *Messenger* comes equipped with Crystal J250-918 (Channel 18), as standard. On orders received in Lynchburg before May 31, antenna J137-804 will be included plus crystals for Channels 1, 5, 7 and 22.

—Lighthouse Larry

At Lynchburg, Va., national headquarters for the General Electric Communication Products Department, Product Service Engineer Harry Clare checks battery drain of high-performance Transistorized Progress Line, manufactured by G-E and now being shipped in quantity. Receiver and power supply are fully transistorized. Four tubes are used in transmitter. On standby, ready to receive a call with full volume, the unit drains only 0.040 amps from the battery — the lowest drain achieved in communications industry to date. The same sales and service outlets which handle the Progress Line nationally will also handle Messenger Citizens Band equipment.

Approximately 900 authorized independent General Electric mobile communications service stations in all parts of the nation are participating in General Electric's new Citizens' Band service program. The years of experience gained by this group in servicing G-E's tuberized Progress Line, used in low-band, high-band and 450-megacycle frequencies, will be carried over to the Viking Messenger, being distributed by G-E for the 27-megacycle Citizens Band.

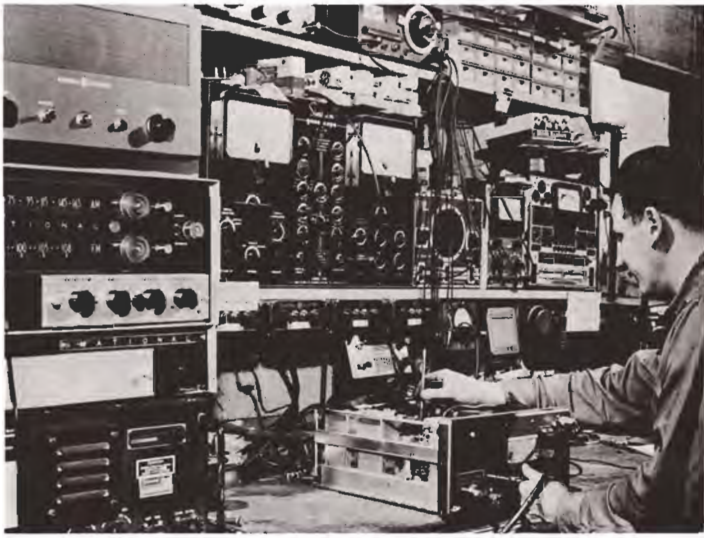

For hams who act fast, there's a special introductory offer on this Viking Messenger Class D Citizens Band unit. On orders received by G-E Communication Products Department, Lynchburg, Va., prior to May 31, 1960, G-E will include crystals for four extra channels plus a collapsible antenna at the standard price of $139.75, which normally includes a crystal for only one channel, plus mike and necessary power cords. (See story at left.)

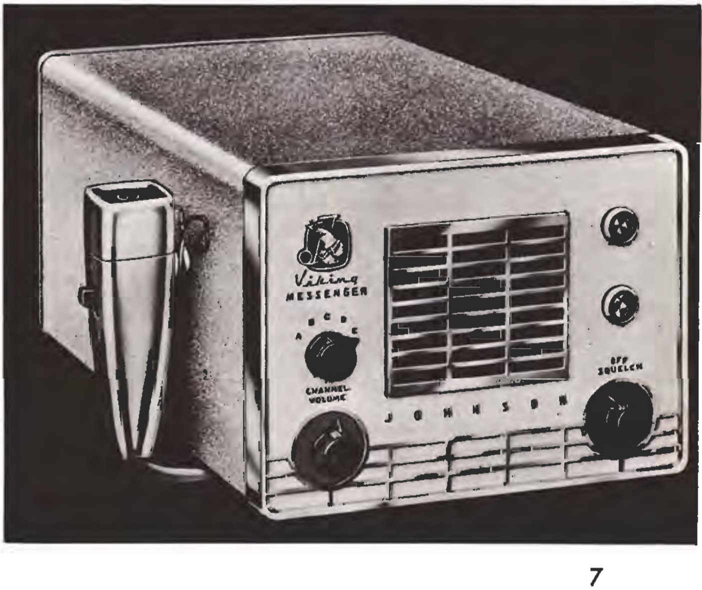

THE HANDY ANDY TOWER

By A. C. (Andy) Sturgis, W4DVL*

NEED A LOW-COST, easy-to-build, serviceable antenna support? Read how W4DVL has designed a simple 32-foot high tripod mast which will solve many amateurs' skywire problems.

VERSATILITY IS THE NICKNAME for the HANDY ANDY TOWER, since it can be used to support the ends or center of dipole and long-wire antennas, keep a vertical antenna aimed skyward, or support a beam and rotator weighing up to about 35 pounds. Several masts, identical to that in the picture on this page, have been put up at stations in W2-land. All have withstood severe weather conditions with no failures.

This tower can be assembled and installed by one person in almost any location over a week end, including time for the paint to dry.

The over-all assembly of the tower is shown in Fig. 1. Note the similarity to the famous "A-frame" mast, with a third base leg added. In addition, W4DVL has devised simple but effective underground base anchors which are essential if the tower will not be guyed. The over-all load of the tower is equally divided among the three legs. Materials and hardware required for construction are listed in TABLE I.

THE TOWER CAN BE CONSTRUCTED with simple hand tools: a ⅜-inch diameter wood bit and brace; claw hammer, screw driver, pliers, hand saw and tape measure. For best results, good straight lengths of wood for the legs and top section (parts 1, 2, 3 and 4), free of knots, cracks and other imperfections, should be selected. Of course, the braces and short pieces usually can be cut from between imperfections in the 1 x 2-inch x 16-foot pieces.

A fairly flat working space about 35 feet long and 10 feet wide is desirable for assembling the tower. Start with the assembly of the front support legs (parts 1 and 2) and the upper mast section (part 4). Lay two of the twenty-foot 2 x 2's, and the 16-foot 2 x 2 on the working surface so that they overlap as shown in Fig. 2.

Clamp the pieces together and drill one ⅜-inch diameter hole through all three pieces. Run a ⅜ x 6-inch carriage bolt through the hole, put on a washer and tighten up the other carriage bolts, washers and nuts. Draw up tightly on all three nuts to firmly seat the washers in the wood. Next, assemble the third 20-foot long 2 x 2 (part 3) base leg, as shown in Fig. 3, and tighten all carriage bolt nuts firmly.

The bottom ends of the three base legs can now be spread apart with temporary strips of wood about 3½ feet long, so that the points where the permanent spreaders (part 5) will be assembled are 4 feet apart. Notice that legs Nos. 1 and 2 may have a tendency

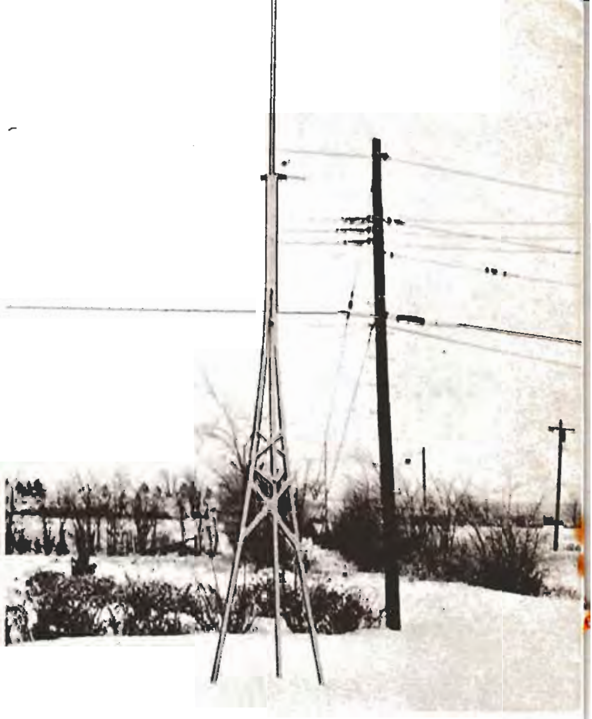

HANDY ANDY TOWER installed in snowy W2-land. If 22-foot long 2 x 4-inch lumber is substituted for the 2 x 2-inch lumber used on this model, overall heights of 40 feet are possible.

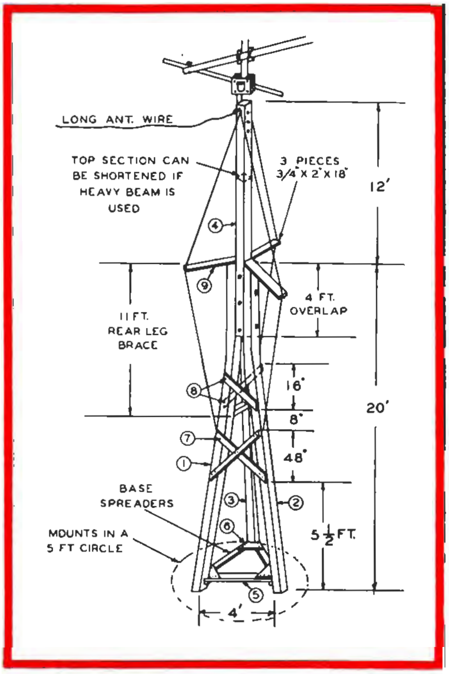

FIG. 1 ASSEMBLY DRAWING for the tower. Dimensions of all wood parts are given in TABLE I.

---

* W4DVL is an engineer with the Terminal Equipment Engineering group of General Electric's Communication Products Department, Lynchburg, Virginia.

to twist, due to the tri-directional tension on all three legs when spread out.

Cut the base spreaders to fit, trimming the ends of the two spreaders running to the No. 3 leg to the proper angle, as shown in the over-all view, Fig. 1. (Remember the old story about the man who built his boat in the basement — ed.) Nail small blocks of wood on the base legs to support each spreader before nailing them in place. Add triangular gussets (part 6) made from ¼-inch thick marine plywood at the junctions of the spreaders and base legs.

The cross braces can be assembled next, using either the notched wood joint shown in Fig. 4A, for braces nailed to the outside of the legs; or, a block of wood at the point where the spreaders cross, shown in Fig. 4B, when one spreader is nailed to the inside of the legs.

Next, add the rear braces (part 10) to the third base leg, as shown in Fig. 5. An extra set of cross braces (part 8) can be added to the mast about 10 feet up from the ground for added rigidity, if desired. After the base spreaders and cross braces are assembled, balance the mast horizontally across a saw horse or other support. Jiggle one end of the mast up and down and the amount of sway in a strong wind can thus be determined. Additional cross braces can be assembled; however, the bracing shown is sufficient to allow only a little flexibility in strong winds.

Three sway-brace wires should be added to the mast, running from near the top, over the spreaders (part 9) and down to about 9 feet from the bottom end. If the tower will support one end of a wire antenna, install a pulley at the top on the side away from the No. 3 leg. It will be most convenient to insert

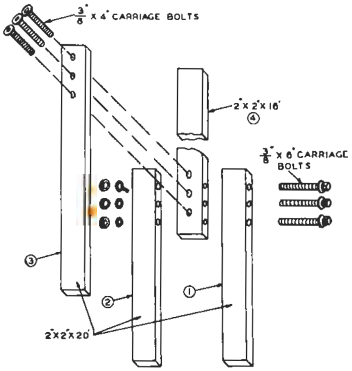

FIG. 2. EXPLODED VIEW of the middle joint between the legs and top section (Parts 1, 2, 3, and 4). Bolt holes are spaced 15 inches apart.

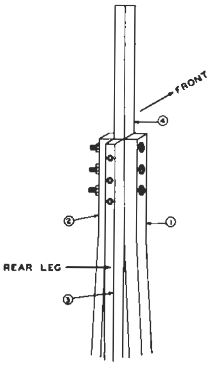

FIG. 3. MIDDLE JOINT assembled. Use washers under all bolt heads and nuts.

TABLE I — BILL OF MATERIALS

WOOD:

3 — 2 x 2-inch x 20 feet, fir or white pine (Parts 1, 2, 3)
1 — 2 x 2-inch x 16 feet, fir or white pine (Part 4)
2 — 1 x 2-inch x 16 feet, fir or white pine (Parts 5, 7, 8, 9, 10)
1 — 2 x 4-inch x 14 feet, fir (for base anchors)
1 — 6 x 48 x ¼-inch thick marine plywood (Part 6)

HARDWARE:

3 — ⅜ x 6-inch long carriage bolts
3 — ⅜ x 4-inch long carriage bolts
6 — ⅜-inch washers
6 — ⅜-inch nuts to fit carriage bolts
18 — ¼ x 2-inch hex head bolts with nuts and washers
2 — strap hinges 1½ inches wide
1 — medium size hasp, 1½ inches wide
1 — eye bolt
Nails — ¼-pound each, No. 4 and No. 8, resin coated
1 — quart white house paint
75 — feet No. 12 stranded galvanized steel guy wire
50 — feet plastic covered nylon core clothesline

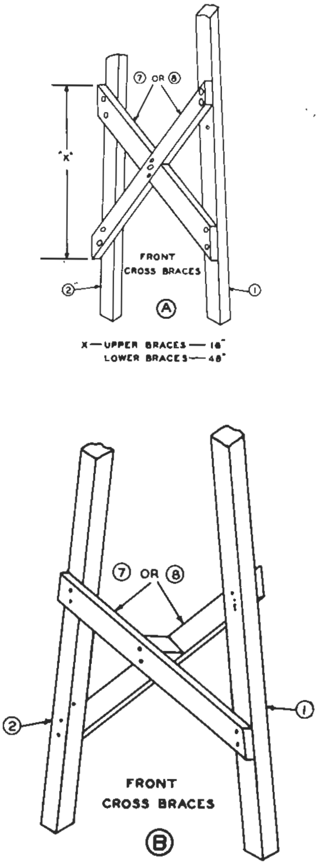

FIG. 4. CROSS BRACE DETAILS, showing (A — top) notched brace; and (B — bottom) simple brace with block between pieces.

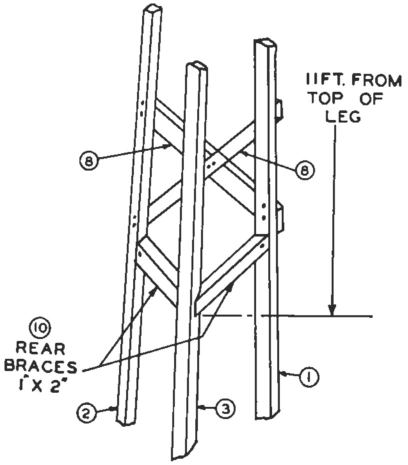

FIG. 5. REAR BRACE details, showing how the 1 x 2-inch braces are notched to fit the third leg, mitered at front legs.

small turnbuckles in these wires and adjust them to hold the top section straight after the mast is vertical.

THE COMPLETED MAST should be given about two coats of outside house paint in your favorite color. While the paint is drying, the ground stakes, cut from the 2 x 4 lumber, should be prepared. If the ground is quite hard, pointed stakes (style B in Fig. 4) can be driven in and should provide adequate anchorage.

For soft ground, or where you want to be sure that the mast will remain anchored even in high winds, make the anchors with cross pieces at the bottom (Style A in Fig. 4). For the latter, dig a hole for the anchor and fill it up with rocks and dirt, packing it down tightly. The two front legs can be hinged either with shed door hinges, or with bolts run through holes in the legs, as illustrated.

Locate the positions of the anchors for the two front legs by laying the mast on the ground, front side down, with the base at the desired location. Fasten the hinges to the anchor posts with the ¼ x 2-inch long bolts. To keep the wood from splitting, place strips of $\frac{1}{16}$-inch thick metal on the tower legs.

After the legs are fastened, raise the mast up to a vertical position and mark the position of the third anchor. Lower the mast, install the third anchor, raise the mast again and fasten the hasp to the anchor and tower leg with ¼ x 2-inch bolts.

Standing off from the mast about 30 or 40 feet, check the mast for vertical alignment in all three diections, and, if necessary, drive one of the stakes a bit further into the ground until the mast is vertical. Of course, if ground anchors with the cross pieces are being used, they should be leveled with each other before filling up the holes.

Before the mast is stood up for the last time, be sure to feed the plastic clothesline antenna halyard through the pulley; it's *much* easier than trying to do it after mast is up.

If the mast is to support a rotator of the TV antenna type, fasten it to the top section and mount the beam on it after the base anchors have been installed. Beams with a boom length up to 12 feet can be safely supported on this tower. Longer boom lengths may exert excessive twisting torque on the upper mast section and break it.

The original HANDY ANDY TOWER has withstood some very windy weather for more than four years, while supporting a wire antenna. A set of guy wires running from near the top of the upper section at an angle of 30 degrees or more has been found good insurance if a beam with high wind resistance is installed. Guy wires may not be necessary for wire antennas less than 150 feet long.

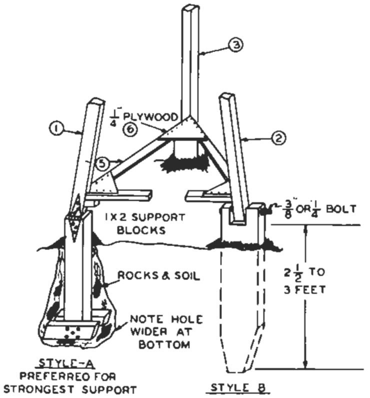

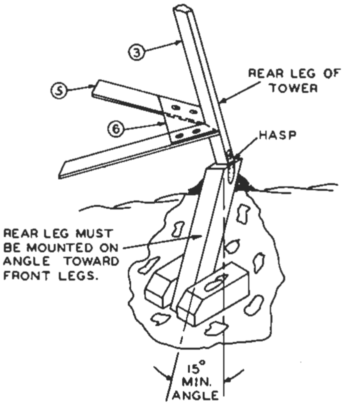

FIG. 6. (LEFT) GROUND ANCHORS for the two front legs of the tower. The anchors should be coated with roofing cement before burying them in the ground.

FIG. 7 (RIGHT) ANCHOR for the third tower leg. It should be set at an angle for maximum resistance to the pulling action of the tower in high winds.

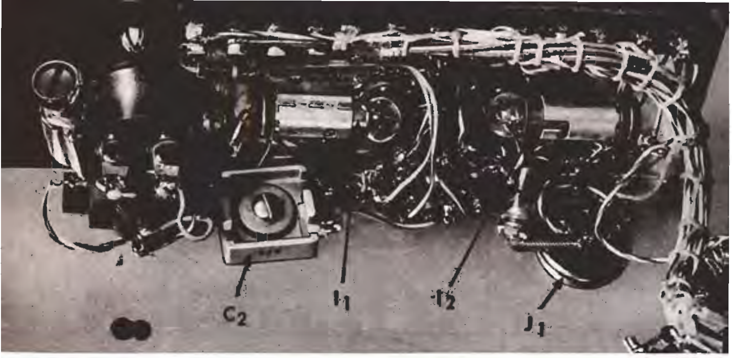

THE CABINET BOTTOM half, with parts and wiring behind the panel exposed. The cable from the center chassis connects to a long row of terminals fastened to the upper edge of the panel. Locations for C_2 and J_1, on the cabinet bottom, not shown in the cabinet drilling diagram, Fig. 3, can be determined from this view.

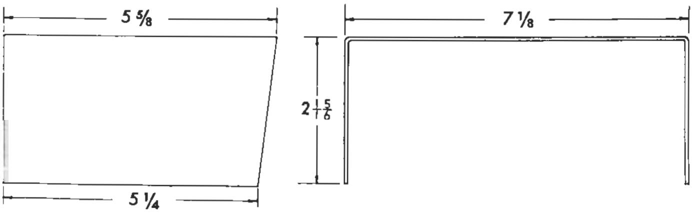

FIG. 5. HOODED COVER which can either be installed on the commercially made cabinet, or on a home-made cabinet. A piece of 1/16-inch thick sheet aluminum, 13 1/4 x 5 5/8 inches over-all, is required.

THE TC-75

(continued from page 5)

The center chassis (bolted to the cabinet by two bolts) holds most of the wiring and parts. Parts should be mounted so they (tubes, transformers and coils) project toward the rear, and the adjusting screws face the front panel, in line with the adjusting holes in the panel. When mounting the chassis, be sure and leave enough room between the center chassis and the rear so the tubes can be removed and inserted. Tuning holes in the front panel are normally covered by plug buttons except the final tuning slug adjustment. For this, a ¼" shaft is drilled and tapped for the slug's 6-32 thread and a ¼" nut is used for a lock nut. This ¼" shaft projects through a hole in the front panel and becomes the only control normally used. C_2 however, is easily accessible on the bottom of the cabinet, just under S_1.

Wiring is short and direct, making use of tie points where necessary. Filter F_L is mounted on the center chassis, also by tie points. A small bracket holds the relay (K_1) over the antenna loading capacitor (C_2).

The converter tune-up is started by tuning the broadcast receiver to the portion of the 3-8-4.0-megacycle band that is used the most. The RF and mixer slugs are adjusted for maximum signal from a nearby station on about 3.9 megacycles. One of the neat things about a crystal-controlled converter is that the push buttons on the car radio can be set to the ham frequencies you use. No tuning is necessary; just push the button.

The padder capacitor C_2 is peaked on the broadcast band to some weak station about 1000 kilocycles.

THE TRANSMITTER oscillator is tuned by adjusting the slug in L_1 maximum grid current in the final stage, then backing the slug out (lowering inductance) to about 80 percent of the peak value. This should be about 1 milliampere or more. Switch the meter to the plate current position and adjust the slug in L_2 for minimum plate current. Adjust the loading control (C_1) for 50 milliamperes plate current at 300 plate volts. Make sure to readjust L_2 for resonance after loading the final with C_1.

A GOOD ANTENNA is the key to good results with this, or even a more powerful mobile rig on the 3.9-megacycle band. Every amateur has his own opinion about the best type of mobile antenna — base-loaded whip, center-loaded whip, helical type whip, etc. — but this little rig has been operated successfully for several months with a base-loaded whip antenna. Normal transmitter working range seems to be about 15 miles on ground wave and up to 250 miles on sky wave propagation (assuming no interference at the receiving end, of course).

A larger cabinet would be desirable for the TC-75 if the components to be used are larger in size than those chosen for this model. An 8 x 6 x 4½-inch interlocking box (LMB No. 146) is available; or, the 8 x 6 x 3½-inch, and 10 x 6 x 3½-inch **Minibox** type enclosures should be a suitable housing.

Some constructors may even prefer to construct the TC-75 in three connecting units with the power, audio, metering and control circuitry in the middle; the transmitter r.f. unit on one end, and the converter on the other end. This construction technique is particularly adaptable to having separate transmitter r.f. units and converters for 3.9 and 7.2-megacycle operation.

Whatever your choice constructionwise, you'll find the TC-75 ideal for getting started in amateur radio mobile work.

Walter Ermer, Sr., W8AEU
RECIPIENT — 1959
EDISON RADIO AMATEUR AWARD

. . . chosen by the judges to receive the Eighth Annual Edison Radio Amateur Award in recognition of his outstanding organizational and administrative ability in providing Cleveland, Ohio, with a 300-man voluntary Amateur Radio Emergency Corps.

During 1959, this Corps provided vital radio communications on 23 occasions — including emergencies such as flood, storm and tornado warning alerts, and searches for lost children. Radio communications for fund drives, and spectator and traffic control at boat and sports car races and parades also were furnished by this group.

The Corps has 304 licensed radio amateur operators, 197 radio-equipped automobiles, 77 walkie-talkies, and 26 emergency power generators. The mobiles at left are being assigned storm emergency patrol by Ermer.

The success of this emergency communications corps is directly attributed to Mr. Ermer's organizational ability, plus demonstrating outstanding initiative, diplomacy, tact, imagination and leadership. He has devoted long hours to consulting and planning with officials of the municipal governments, service, safety, civil defense and amateur radio groups in the Cleveland area.

Mr. Ermer received the award trophy and $500 check at a ceremony in Washington, D.C., on February 25, 1960.

HAM NEWS

Available FREE from your G-E Tube Distributor

MARCH-APRIL, 1960
VOL. 15— NO. 2

E. A. Neal, W4ITC — Editor

BUILD-IT-YOURSELF IDEAS
from the 999 radio amateurs at
GENERAL ELECTRIC

published bi-monthly by
RECEIVING TUBE DEPARTMENT
Owensboro, Ky.

HAM NEWS

MAY - JUNE, 1960

Also in this issue—

PI-NETWORK ANTENNA TUNER . . . page 3

PANEL VIEW of the one-kilowatt pi-network antenna tuner at W2FBS, constructed on an 8¾ x 19-inch aluminum relay rack panel. National type "O" dials are on C_1 and C_2.

MONITORING ADAPTER FOR OSCILLOSCOPES . . . page 6

MONITOR-ADAPTED 'SCOPE AT K2IOW, at right of desk, a Heath type O-5 constructed from a kit. Space for the adapter components and additional panel controls can be found in most test type oscilloscopes.

NEW FAMILY of G-E full-wave rectifier types

NEW G-E RECTIFIER TUBES

NEW TUBE TECHNOLOGIES and materials have been combined by General Electric Receiving Tube engineers in three new rectifier tube types which are more efficient than previous rectifiers.

A new kind of fabricated 3-ply tubular cathode, which acts as its own heater and thus permits a 40 percent power saving, features the 3DG4 high vacuum rectifier now in production at General Electric.

The total cathode and plate dissipation of the 3DG4 is 26 watts, compared to 42 watts for the 5U4-GB, a substantial saving in power loss and wasted heat.

This design offers several advantages. It permits use of a relatively large cathode emission surface, as opposed to the wire cathode of filamentary type rectifiers. Tube voltage drop is less than half that of older high vacuum rectifiers in similar service.

Elimination of a separate heater eliminates the possbility of heater-cathode failures through arc-over, breakdown or burn-out. Finally, the new large-surface cathodes in the 3DG4 provide exceptional mechanical strength.

(continued on page 7)

CROSS SECTION Drawing of 3-ply plate material in G-E rectifier tubes. The bonded plate material employs copper both to conduct heat rapidly and to reflect heat where needed, aluminum to radiate heat, and iron to provide strength.

FIG. 1

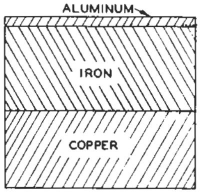

—Lighthouse Larry

IRE SHOW STARS . . .

Many amateurs have been asking us, "What's new in ceramic tubes?" And our best answer has been to show them the ten types which were displayed at the 1960 IRE International Show and Convention in New York City last March.

Capable of operating at high temperatures, ceramic receiving tubes deliver the ultimate in high frequency performance in the small tube range without the use of blowers or other bulky, inefficient cooling systems.

As you can see from this picture, ceramic tubes vary in diameter from about half that of a pencil to a half dollar, depending on power output capabilities. Low noise figures feature their UHF performance. The tubes are easy to mount, rugged, and provide flexibility in circuit design. General Electric's line of registered types includes:

7077 — low-noise high gain triode for RF amplification.
7266 — high impedance, high frequency diode detector.
7296 — VHF power amplifier triode.
7462 — low noise, high frequency amplifier.
7486 — high frequency multiplier and oscillator.
7625 — low-microphonic high impedance, high voltage gain triode amplifier.

Development models are:

- — Broad-band, low-noise triode amplifier.
- — High peak inverse voltage medium power diode rectifier.
- — Low Mu linear triode power amplifier.
- — Small high frequency oscillator and multiplier triode.

Of particular importance is the fact that ceramic receiving tubes are relatively immune to nuclear radiation.

Increasing acceptance of ceramic receiving tubes is reflected in General Electric's Receiving Tube Department at Owensboro, Ky., expanding its line of these devices.

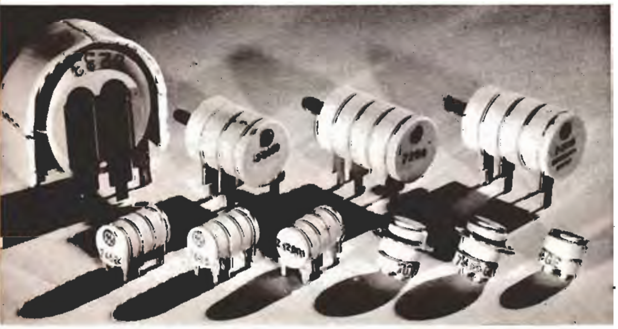

COMING NEXT ISSUE . . .

. . . information on high power, high-voltage supplies for mobile operation, plus a construction article on crystal controlled mobile converters. Also, we'll tell you about new, high-gain pentode receiving tubes. Ask for this issue from your nearby G-E Tube distributor. He'll have it about July 15.

NEW PUBLICATIONS . . .

We're planning three new projects at *G-E HAM NEWS* and want our readers to know about them, since we have had many inquiries about the first two. Details on each project follow.

1. THIRD BOUND VOLUME:

Yes, we're planning another bound volume of *G-E HAM NEWS,* to be made available in December, 1960 (in answer to a multitude of requests).

This book will contain all thirty isues of *G-E HAM NEWS* published from January-February, 1956 (Vol. 11, No. 1), to November-December, 1960 (Vol. 15, No. 6).

For those who are not acquainted with our bound volumes, this will be the third such book. The first and second bound volumes (no longer available, and now collector's items, incidentally) contained all issues published in 1946 through 1950, and 1950 through 1955, respectively.

The third bound volume will be rugged hard bound with the cover in grey, orange and black. The book will contain about 260 pages and include a complete cross index of all material contained therein. The cost will be $2.50, postpaid.

2. NEW SIDEBAND BOOK:

Since our supply of the *SSB PACKAGE* of *G-E HAM NEWS* has run out, we're considering compiling all the information we have ever published on sideband techniques — both single and double — plus related subjects, into a bound book.

This proposed book would contain about 150 pages and be the same over-all size as the present *G-E HAM NEWS.* We're aiming at a selling price of $1.00 per copy, postpaid. The book will be announced early next fall.

3. KING-SIZE *G-E HAM NEWS?*

In our continuous program to improve *G-E HAM NEWS,* we've been studying a larger page size — 8½ x 11 inches — as compared to the present 6½ x 9¼-inch page size. The larger page size would provide 60 percent more usable editorial space in each regular 8-page issue.

If we change the size, it will start with the January-February, 1961 issue. It also will be punched for insertion in a standard 3-ring binder, thus providing a convenient means for keeping your back issues in good condition.

PI-NETWORK ANTENNA TUNER IDEAS

By S. E. Johnson, W2FBS*

END-FEEDING LONG-WIRE ANTENNAS can be simplified with this pi-network antenna tuner which will match a low-impedance transmitter output to a 100-2,400-ohm antenna impedance.

A LOW-PASS FILTER is usually required at the output of a transmitter for good suppression of television-interfering harmonics. If an end-fed antenna is connected directly to the final amplifier plate tank circuit, there is no convenient way to introduce the low-pass filter between the transmitter and antenna.

Since a long-wire antenna will accept and radiate any and all signals that the transmitter produces, the low-pass filter is essential. It should be located as close as possible to the transmitter, and a coaxial cable run to a separate antenna impedance matching network, located close to the antenna.

During the 1930's the pi network was a very popular antenna matching device. Double pi networks were often used to match transmitters to balanced open-wire feedlines. However, the pi network was "discovered" as a plate tank circuit about 15 years ago and it fell into oblivion as an antenna matching device. This was largely due to the popularity

(continued on page 4)

TABLE I — PARTS LIST, PI-NETWORK TUNER

C_1	30-350-mmf variable, air gap 0.03 inches per 1,000 plate volts on final (For up to 1,500 volts, use Cardwell PL-8004 or Johnson 350E20, Cat. No. 154-2; for 1,500 to 3,000 volts, use Cardwell PL-8044 or Johnson 350E30, Cat. No. 154-10).
C_2	20-200-mmf variable, air gap 0.07 inches per 1,000 plate volts on final (For up to 1,500 volts, use Cardwell PL-8050 or Johnson 250E45, Cat. No. 154-16; for 1,500 to 3,000 volts, use Cardwell TC-200-US, or Johnson 250D70, Cat. No. 153-13).
J_1	chassis type coaxial cable jack (50-239 type).
L_1	15 microhenries, 20 turns, No. 10 tinned wire, 3 inches in diameter, 3¾ inches long; 10 turns wound 4 turns per inch (2½ inches long) and 10 turns wound 8 turns per inch (1¼ inches long) (air-dux No. 2408D4 dual pitch inductor).
L_2	Same coil as L_1 tapped every second turn.
M_1	0-4-ampere thermocouple type r.f. ammeter (G.E. type DW-52, or equivalent).
S_1	Fig. 1: 3 position, 1 section heavy duty ceramic insulated tap switch (from BC-375 transmitter). Fig. 2: 11-position, 1 section 10-ampere power tap switch ceramic insulation (Ohmite Model 111, 11 taps).

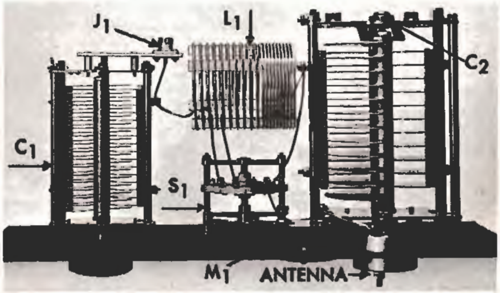

TOP VIEW of the one-kilowatt pi-network antenna at W2FBS. The coil taps shown at 3 and 5 turns from the C_1 end of L_1 are for a 243-foot long wire antenna. The same parts layout should be followed for the tuner in Fig. 2. A tuner with smaller components for 100-watt class transmitters can be housed in a 5 x 6 x 9-inch box, or on a rack panel 3½ inches high.

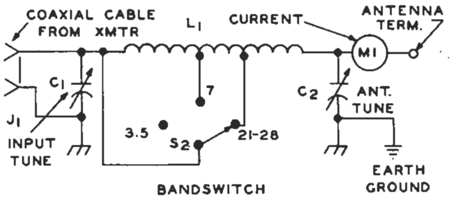

FIG. 1. SCHEMATIC DIAGRAM of the pi-network antenna tuner model shown in the photos.

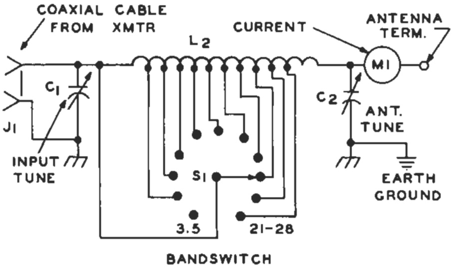

FIG. 2. DIAGRAM of a tuner with additional taps on the coil to obtain a precise impedance match. A 15-microhenry rotary inductor (Johnson 229-202, or equivalent) can replace L_1 and S_1.

---

*W2FBS, a mechanical engineer by profession, is Manager — Pump and Valve Engineering, in the Machinery Apparatus Operation of General Electric's Turbine Division in Schenectady, N. Y.

His previous contributions to **G-E HAM NEWS** have been the "SOLID HIGH-C VFO" in the July-August, 1959 issue, and as consultant for the Special DX LOG Issues of **G-E HAM NEWS** (the latest DX LOG was published in July-August, 1958). The latter is a by-product of Sam's ardent DX chasing; his present DXCC country total is just over 250.

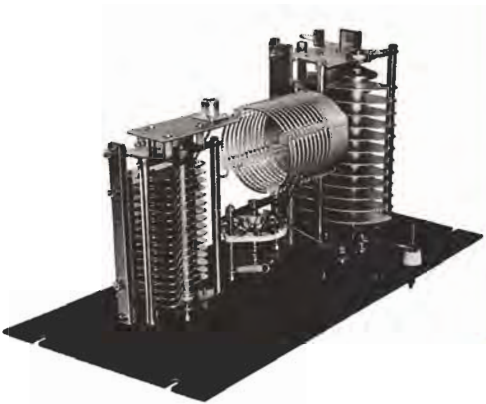

END VIEW of the tuner, showing the aluminum plate on which the coaxial cable input connector, J_1, fastened to C_1.

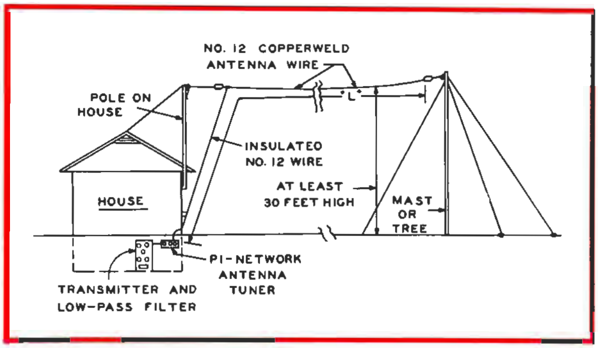

FIG. 3. END-FED ANTENNA installation at W2FBS. For best results the horizontal portion should be at least 30 feet above ground, and preferably as high as possible. A short, heavy lead should be run from the antenna tuner to the nearest good ground, the same ground as used for the power system.

TABLE II — END-FED ANTENNA LENGTHS

Over-all Length "L," Including Lead-in (Feet)	Number of Quarter Wavelengths at 3.5 MC.	4.0 MC.	7.0 MC.	14 MC.	21 MC.	28 MC.
105	1.5	1.71	3	6	9	12
173	2.5	2.86	5	10	15	20
243	3.5	4.0	7	14	21	28
313	4.5	5.15	9	18	27	36
383	5.5	6.29	11	22	33	44

(continued from page 3)

of coaxial feedlines and the impedance matching properties of the tank circuit itself. By turning a pi network around, it can match a low-impedance coaxial cable to a high-impedance end-fed antenna.

At W2FBS, a pi-network tuner was constructed to resonate a long wire antenna on three bands, 3.5, 7 and 21 megacycles. The schematic diagram is shown in Fig 1. Total inductance of the coil, L_1, for the 3.5-megacycle band, and the tap positions for 7 and 21-megacycle operation, were determined by experiment. A 0-4-ampere r.f. ammeter was installed to indicate maximum antenna current.

More taps can be added to L_1, as shown in the diagram of Fig. 2, to provide greater flexibility in matching. An 11-position power type tap switch will withstand the r.f. voltages present when insulated from the tuner panel. Taps on every other coil turn.

A RACK PANEL was used to support all components in the pi-network tuner at W2FBS, shown in the photos. Any make of variable capacitor having the proper capacitance and plate spacing should be suitable for C_1 and C_2. The coaxial cable connector was mounted on an aluminum bracket fastened to C_1. The coil was supported between the capacitors on its leads (No. 10 wire). Leads for the coil taps and ammeter connections were made from No. 12 tinned solid wire. The parts layout for this tuner is shown in Fig. 3.

A 15-microhenry rotary inductor can be substituted for L_1 and S_1. Its current rating should be at least 5 amperes for a kilowatt transmitter. For 100-watt class transmitters, use smaller tuning capacitors and inductance, as suggested in TABLE I.

When installing the pi-network antenna tuner, be sure to connect the panel to an earth ground with a short, direct lead. Preferably, the tuner should be located close to the point at which the end-fed antenna lead-in enters the station. A standing wave ratio indicator in the coaxial cable between the transmitter and tuner is handy for initially determining the correct settings for C_1, C_2 and S_1 for each of the bands to be covered.

The end-fed antenna installation at W2FBS is depicted in Fig. 3. Note that the total length of wire in the antenna is measured from the connection to the antenna tuner. If the ground lead is more than a few feet long, it should be included in the over-all length.

By selecting an antenna length that is an odd number of quarter wavelengths long on the lower frequency amateur bands, the feed

IMPROVED CARBON MICROPHONE CIRCUITRY

By D. T. Geiser, WA2ANU*

"SNEAK" CIRCUITS in carbon microphones can disrupt control circuits, or even run down batteries. Here's WA2ANU's answer.

THE INTERNAL CIRCUITRY of the TS-13 handset can cause difficulty when the microphone plug is inserted into circuitry designed for the T-17 microphone. The differences in internal wiring are shown in Fig. 1. (It is not known whether *all* have these circuits, but they have been found in the T-17D and TS-13E. Several other types of carbon microphones also have similar internal circuitry.

The switching circuit has separate leads in the T-17 microphone cable, but the TS-13 has a common lead, connected to the tip of the plug, for the "cold" side of the microphone and the connection for the control circuit switch. Thus without the switch pressed, power can travel from the microphone circuit into the control circuit, or vice versa.

THIS "SNEAK" CIRCUIT can "hold-in" control circuit relays or discharge microphone batteries, to name only two undesirable effects. If both microphone and control circuit supplies are direct current (a good idea), a rectifier can be used to open this sneak circuit. A diode with low leakage, such as the G. E. 1N91, can be connected in the forward direction for the lower voltage supply, both supplies having the same polarity with respect to ground. Fig. 2 shows the 1N91 in the microphone lead; if the control voltage is lower than that on the microphone, the diode should be in series with the relay coil. Of course, if the two voltages are equal, no diode is needed.

If you have noticed relays mysteriously holding your equipment, try adding the 1N91 diode to eliminate "sneak" circuits.

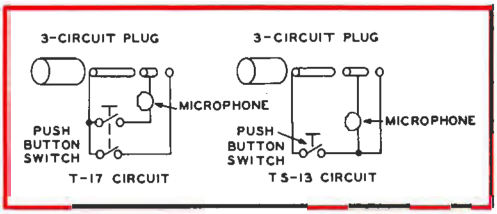

FIG. 1. COMPARISON of circuitry found in some T-17, TS-13 and other carbon microphones with push-to-talk switch buttons. Note that the T-17 has a fourth lead for the control circuit which becomes common with the microphone circuit at the 3-way plug.

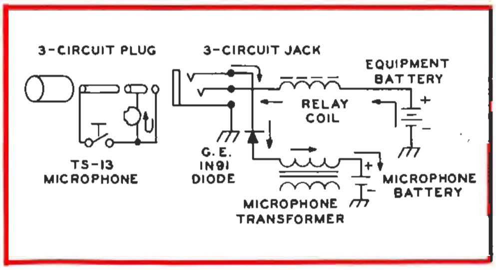

FIG. 2. A G. E. 1N91 junction diode blocks the circuit by which reverse current could otherwise flow when the push-button switch is open (current path is traced by arrows). Power supply polarities should be the same. The diode should be connected in the forward direction of the lower voltage supply.

*WA2ANU is a components engineer with General Electric's Light Military Electronics Department, Utica, N. Y.

---

point will be at a current node and impedance matching problems are minimized. Suggested over-all lengths are shown in TABLE II. At W2FBS, a wire 243 feet long was strung up. This length is slightly less than one wavelength long on the 3.5-megacycle band, so that the feedpoint is between a voltage and a current maximum. At 14, 21 and 28 megacycles, the antenna has enough quarter-wavelengths so that other effects are more important in determining the feedpoint impedance at the tuner.

A 313-foot-long wire antenna will have a current maximum at the feed point on both 4 megacycles, and 7 megacycles. To calculate the over-all length of an even longer odd-quarter wavelength end-fed antenna, add 70 feet for each *two* additional quarter wavelengths at 7 megacycles. Of course, the pi-network antenna will match a transmitter into almost any odd length of wire, in addition to the standard resonant lengths. However, at or near a current node, the matching will be much easier, and there will be less r.f. energy radiated at the antenna tuner.

INITIAL TUNEUP for each amateur band is simply a matter of determining the capacitances and inductance required for a combination of the desired DC plate current on the transmitter's final amplifier, lowest standing wave ratio in the coaxial cable from the transmitter, and the highest antenna current reading on the r.f. ammeter.

First set C_1 at maximum capacitance, then try L_1 at different taps, retuning C_2 as needed, for maximum output with a minimum standing wave ratio. If the transmitter cannot be loaded heavily enough, set C_1 at a lower capacitance and again adjust L_1 and C_2. When the correct settings have been established for each band, mark the settings on the dials or a calibration chart for instant tuneups thereafter.

MONITORING ADAPTER FOR OSCILLOSCOPES

By Robert (Bob) A. Hall, K2IOW*

THIS BUILT-IN ADAPTER provides both r.f. and audio signals for a test oscilloscope, permitting visual monitoring of the modulation on amateur transmitters.

TEST OSCILLOSCOPES are coming into wide use among radio amateurs, thanks to the low cost 'scope kits on the market. In addition, many amateur radio clubs now have 'scopes available for loan to members for checking their equipment.

The utility of these 'scopes is greatly increased by building in a bandswitching tuned circuit, connected to the cathode ray tube's vertical deflection plates. But this change alone does not provide a sample of the audio output signal from the transmitter, necessary for forming the *trapezoidal* type test pattern on the oscilloscope screen.

The addition of a simple diode demodulator circuit and r.f. filter to the tuned circuit provides this audio signal, avoiding the complication of having to tap it from the transmitter's audio section. The audio signal from the diode is then applied to the horizontal amplifier in the oscilloscope.

The complete circuit is shown in the schematic diagram, Fig. 1. Connection to the

(continued on page 7)

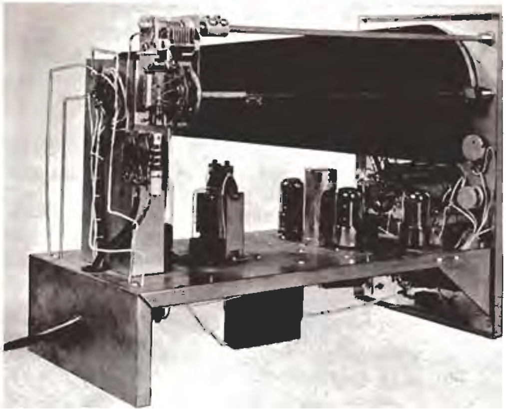

SIDE VIEW of the 'scope, with the adapter on the vertical support for the cathode ray tube socket.

TABLE I — PARTS LIST

C_1	8-100-mmf variable (Hammarlund MC-100S)
J_1	chassis type coaxial cable connector; phono type jack is suitable.
L_1	21 uh, 36 turns, No. 20 tinned wire, 1 inch in diameter, 1 1/8 inches long, 32 turns per inch, tapped at 18 turns (7 Mc.), 24 turns (14 Mc.), and 32 turns (21 and 28 Mc.) from grounded end No. 3016 Miniductor, or air-dux No. 832 coil stock).
L_2	6-turn link coil of same coil stock at grounded end of L_1.
P_1	male type coaxial cable plug; phono type plug is suitable.
RFC_1	2.5-mh pi-wound r.f. choke (National R-100, or equivalent).
S_1	1 pole, 4 position, single section rotary tap switch.
S_2	1 pole, 2 position toggle or selector switch.
T	Amphenol type 83-1T coaxial Tee connector.

CLOSEUP VIEW of the bandswitching tuned circuit and demodulator on insulated terminal board.

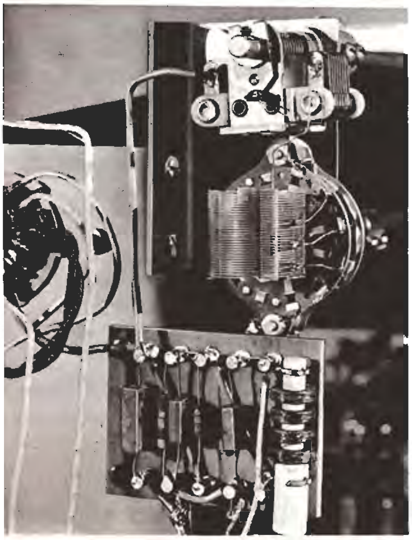

FIG. 1. SCHEMATIC DIAGRAM of the 'scope adapter. All components to the right of J_1 should be installed inside the 'scope cabinet. The optional link coupling circuit, L_2, is recommended where more than 10 feet of coaxial cable is required between the transmitter and oscilloscope. The "gimmick" capacitor should then be replaced with a 10-mmf mica capacitor. All capacitances are in mmf, mica, unless otherwise specified.

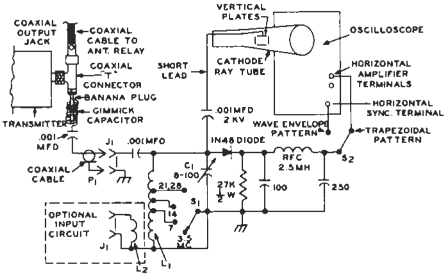

---

*K2IOW is a time-standards engineer with General Electric's Methods and Time Standards Service operation in Schenectady, N. Y. Bob will be remembered by many readers for his previous articles in **G-E HAM NEWS**: COMPACT TRIODE KILOWATT, modern construction of a final amplifier with paralleled GL-810's, September-October, 1959 (Vol. 14, No. 5) issue; and, BANDSWITCHING HIGH-C VFO in the March-April, 1959 issue, Vol. 14, No. 2). Copies of these issues are available upon request to the **G-E HAM NEWS** office.

(continued from page 6)

transmitter r.f. signal is made by adding a "T" type coaxial cable connector (Amphenol 83-1T) between the r.f. output jack and the coaxial cable running to the antenna tuner or antenna changeover relay. A banana plug is inserted into one side of the "T," with an inch or two of insulated wire connected to it. Another insulated wire is then wrapped around it to form a small "gimmick" 1 to 4-mmf coupling capacitance or, a small variable capacitor will permit precise adjustment of coupling.

The tuned circuit consists simply of a 100-mmf variable capacitor and a tapped coil, permitting coverage of from 3.5 to 30 megacycles. The demodulated audio output may be applied either to the 'scope's *horizontal amplifier;* or, to the *horizontal sync* terminal. The latter connection provides synchronizing voltage for the horizontal sweep circuit in the 'scope when the wave-envelope type pattern is employed to check the transmitter. A selector switch (S_2) is handy here, but a lead which can be connected to either terminal will suffice.

CONSTRUCTION of the adapter will depend upon the physical layout of the 'scope to which it is being added. The installation shown in the photos used a simple aluminum angle bracket to support the tuning capacitor and bandswitch. All the demodulator components were mounted on a small terminal board. Insulated extension shafts were run from the capacitor and switch (S_1) to panel control knobs.

The connection from the tuned circuit to the vertical 'scope plate should be as short as practical; that is why the tuned circuit was mounted close to the base of the cathode ray tube. The .001-mfd coupling capacitor should be rated for twice the DC high voltage on the tube.

The coupling capacitor should be adjusted to provide full vertical deflection on the oscilloscope screen with the tuned circuit resonated at the lowest transmitter operating frequency. Then, the capacitor should be detuned for correct pattern height on the higher frequency amateur bands.

Examples of the correct and incorrect oscilloscope waveforms for amplitude-modulated, single sideband and double sideband transmitters can be found in the amateur radio handbooks. The subject is too comprehensive to be reviewed here.

This simple 'scope adapter has seen service at K2IOW for about two years and has been instrumental in insuring that *clean* amplitude-modulated and sideband signals emanate from our COMPACT TRIODE KILOWATT.

NEW G-E RECTIFIER TUBES

(continued from page 1)

Cathode heating time of all three types, the 3DG4, 5AR4 and 6CA4, approximates that of other cathode type tubes. Thus, the power supply voltage surge which usually occurs with fast-heating rectifiers, before slow-heating tubes draw plate and screen currents, does not happen. Filter and bypass capacitor breakdowns from this cause are minimized.

In addition to the 3-ply cathode material, new 3-ply plates have been incorporated into the 3DG4, 5AR4, and 6CA4. The bonded plate material, shown in Fig. 1, spreads heat evenly, uses it where it is needed, and dissipates heat efficiently where it is not needed.

Typical operating conditions for these new rectifiers are given in TABLE I. For performance comparison, ratings of the 5U4-GB also have been listed. Complete technical data for all types is available upon request to the *G-E HAM NEWS* office.

Utilize these efficient new rectifier tubes in your new home-constructed amateur radio equipment. Try the 5AR4 as a plug-in replacement for older rectifier types having similar base connections for improved performance.

TABLE I — CHARACTERISTICS AND OPERATION

FULL WAVE RECTIFIERS WITH CAPACITOR INPUT FILTER

TUBE TYPE	3DG4	5AR4	6CA4	5U4-GB	
Cathode	Coated Directly Heated	Coated Unipotential	Coated Unipotential	Coated Filament	
Heater Voltage, AC or DC	3.3 = 10%	5.0 = 10%	6.3 = 10%	5.0	Volts
Heater Current	3.8	1.9	1.0	3.0	Amperes
AC Plate-Supply Voltage per Plate, RMS	275	550	350	450	Volts
Filter Input Capacitance	40	40	50	40	Microfarads
DC Output Current	350	160	150	275	Milliamperes
DC Output Voltage at Filter Input	300	620	347	460	Volts
Tube Voltage Drop	25	17	20	50	Volts
at Current per Plate	@350	@225	@150	@275	Milliamperes

13 WPM FROM ~~DASH~~ START TO DASH

6AR8 SHEET BEAM TUBE

The General Electric 6AR8 is a miniature double-plate sheet-beam tube which incorporates a pair of balanced deflectors to direct an electron beam to either of the two plates, and a control grid to vary the intensity of this planar beam, or "sheet." The 6AR8 is especially suited for amateur radio applications in balanced modulator, frequency converter and product detector circuits. It also has a variety of switching and gating applications.

A cross-section diagram of the 6AR8's unique construction is shown at the right. As the electron beam leaves the cathode, it is acted on by the control grid and focus electrodes. Between the accelerators and the plates, the electron beam passed between the deflector electrodes. Depending on the voltages applied to the deflectors, the beam is directed entirely to one or the other plates, or proportioned between them. The internal shields, located between the two plates, acts to suppress the interchange of secondary-emission electrons between the plates.

In balanced modulator operation, for instance, one input signal is applied to the control grid, and the other to the accelerators with a push-pull circuit. The output signals are then present at the plates, and the proper signal frequency is selected with a push-pull tuned circuit.

Try the *G-E* 6AR8 in your new home-built equipment. Complete technical information is available on request to the *G-E HAM NEWS* office.

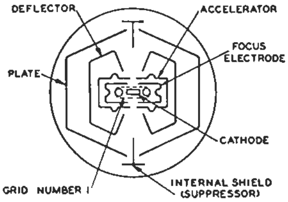

CROSS-SECTION SCHEMATIC DIAGRAM OF THE 6AR8

BASING DIAGRAM

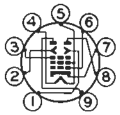

RETMA 9DP
BOTTOM VIEW

TERMINAL CONNECTIONS

Pin 1—Deflector Number 2
Pin 2—Deflector Number 1
Pin 3—Accelerator
Pin 4—Heater
Pin 5—Heater, Internal Shield, and Focus Electrodes†
Pin 6—Grid Number 1 (Control Grid)
Pin 7—Cathode
Pin 8—Plate Number 2
Pin 9—Plate Number 1

HAM NEWS
Available FREE from your G-E Tube Distributor
MAY-JUNE, 1960
VOL. 15 — NO. 3
HOW-TO-DO-IT IDEAS
from the 999 radio amateurs at
GENERAL ELECTRIC
published bi-monthly by
RECEIVING TUBE DEPARTMENT
Owensboro, Ky.
E. A. Neal, W4ITC — Editor

HAM NEWS

JULY-AUGUST, 1960

HIGH-POWER MOBILE RADIO SYSTEMS

W8DLD and W8WFH, above, have designed and constructed high-power mobile amateur radio stations for their station wagons which give them home-station performance on the highway. G-E HAM NEWS is proud to present a series of three articles which describe their systems, starting in this issue. Techniques for power supplies, receivers, and linear amplifiers for CW and SSB communication will be covered.

PART I — In this issue: POWER SUPPLY IDEAS — A 3-phase AC power system, and high voltage power supply circuits.

PART II — September-October, 1960: CRYSTAL CONTROLLED CONVERTERS — Single-band, and bandswitching type converters for mobile reception.

PART III — November-December, 1960: MOBILE LINEAR AMPLIFIER — A compact linear amplifier designed especially for mobile operation.

in this issue . . .

SCANNING the SPECTRUM

MEET THE AUTHORS . . .

W8DLD — A. F. (Al) Prescott, is an engineer with the electronics laboratory at General Electric's Cuyahoga Lamp Plant.

W8WFH — W. C. (Bill) Louden, is technical counselor in Discharge Advance Engineering at G-E's Large Lamp Department.

Both of these operations are located at General Electric's Nela Park, in Cleveland, Ohio, home of our world-famous Lighting Institute.

Al and Bill have amassed years of experience in developing radio equipment — and their 3-phase power system — for mobile use. Their present SSB installations reflect the results, and are nearly all home made, including the antennas, except for the Command set receivers. Their stations operate on all frequencies from 3.5 to 29.7 megacycles, but their favorite channels for daily mobile operating are from 14,250 to 14,300 kilocycles.

Their phasing type SSB exciters have some unusual circuits and ideas, so the readers of *G-E HAM NEWS* will be seeing novel features of this equipment in coming issues. The receiving systems and a linear amplifier will be described in the next two issues.

Dramatic evidence of the reliability of their equipment was illustrated by their being able to keep three-times-daily schedules while separated at times by more than 2,000 miles during vacation motoring trips in 1959 and 1960.

KING-SIZE KIT . . .

While browsing through a recent issue of *Broadcast Engineering* magazine, I saw an article describing what appears to be the largest electronic equipment in kit form on the market — a one kilowatt broadcast transmitter!

The kit was designed for simplified assembly — which should take about 100 hours, according to the manufacturer — but obviously is a project for a person with some experience in the broadcast equipment field. When the transmitter is completed, the manufacturer sends a representative to run proof-of-performance tests in accordance with FCC regulations.

ADDED ALTERNATOR INFO . . .

The alternators which form the key component of the mobile power system described in this article were manufactured by the Leece-Neville Co., 5109 Hamilton, Cleveland 14, Ohio. They are available from automotive parts suppliers, or often may be obtained secondhand when operators of two-way radio equipped vehicle fleets trade in their old equipment for new models.

These alternators also may be ordered as optional accessories on many makes of U.S. automobiles. W8DLD and W8WFH ordered their station wagons factory-equipped with the alternator systems. And, of course, similar alternators will be supplied as standard equipment on several makes of 1961 automobiles. While these alternators may not have the reserve power capacity of the Leece-Neville system, mobileers with equipment requiring up to 300 watts of DC power can take advantage of the 3-phase power available by stepping it up directly to high voltage.

This eliminates the usual three steps of converting the 3-phase AC power into DC, then back to AC in a vibrator or transistor oscillator, and finally back to DC in the high voltage transformers and rectifiers.

NEW MOBILE MANUAL . . .

A new and revised edition of the *Mobile Manual for Radio Amateurs* has just been published. This second edition, edited by the headquarters staff of ARRL, is a comprehensive digest of more than 80 articles from QST on the subject of amateur mobile, emergency and portable equipment.

It's a valuable how-to-do-it manual for the mobile enthusiast; contains 279 pages of editorial text, plus index, and a large number of photographs and diagrams. Examine ARRL's newest handbook at your nearby electronics parts distributor.

LOG FORM QSL's GONE . . .

By the time this item appears in print, our supply of the G-E Log Form QSL card will be completely exhausted. We called your attention to the dwindling supply in the March-April issue. So please don't send in any more orders because we will only have to return them to you.

However, work is progressing on the Third Bound Volume of *G-E HAM NEWS*, and the new *G-E HAM NEWS* SSB Package, as described in this column in the May-June issue. We're planning to have them available by December of this year, both from G-E Tube distributors, and by mail order from the *G-E HAM NEWS* office.

73 until next issue,

—Lighthouse Larry

MOBILE POWER SUPPLY IDEAS

By A. F. Prescott, W8DLD, and W. C. Louden, W8WFH

TODAY'S MORE POWERFUL mobile amateur radio equipment can overload even the larger electrical systems in late model automobiles. Solve this problem by installing a constant voltage, variable-frequency, 3-phase, AC power system—large enough for even a kilowatt mobile rig—using the principles and ideas described in this article.

With many mobile radio installations now requiring 200 watts and more power from automotive electrical systems, it is usually necessary to run the car's engine when this equipment is operated for more than a few minutes at a time to avoid discharging the battery. The standard automotive electrical system, as shown in Fig. 1, just wasn't designed for this purpose.

Many commercial, police and taxi vehicles have 3-phase AC alternators installed to provide extra power for two-way radio equipment. One manufacturer, Leece-Neville, supplies either 6-volt, 100-ampere, or 12-volt, 50-ampere alternator systems, rated at 600 watts output (see page 2 for details).

However, the 600-watt limitation is due mainly to the rectifier connected to the alternator output to change the 3-phase AC current into direct current, as shown in the block diagram of Fig. 2. Over 200,000 miles of field "testing" on the alternators installed to power W8DLD/M and W8WFH/M have proven this system capable of supplying more than 1-KVA of power, even under summer driving conditions.

Note that the rectifier is used mainly for battery charging and other normal needs of the automotive electrical system. The high voltage DC power supply can be fed directly from the alternator, avoiding the less efficient method of first rectifying the 3-phase AC power into direct current, and then obtaining high voltage with a dynamotor, transistorized D-C-to-DC converter, or vibrator power supply.

Voltage regulation of the alternator system is very good. The "variable frequency" mentioned above occurs from changes in engine speed, from 100 cycles with the engine idling, to nearly 1,000 cycles at top speed. However, modern power transformers, even though rated for 60-cycle operation, are capable of operating efficiently over this wide frequency range. And, usually the 60-cycle ratings may be considerably exceeded at the higher supply frequencies.

(continued on page 5)

FIG. 1. BLOCK DIAGRAM of a typical 12-volt DC automotive electrical system. Approximately 200 watts of power may be drawn on an intermittent basis to operate mobile radio equipment. Usually the automobile engine must be kept running if more than a few minutes operation of radio equipment is attempted to keep the storage battery charged.

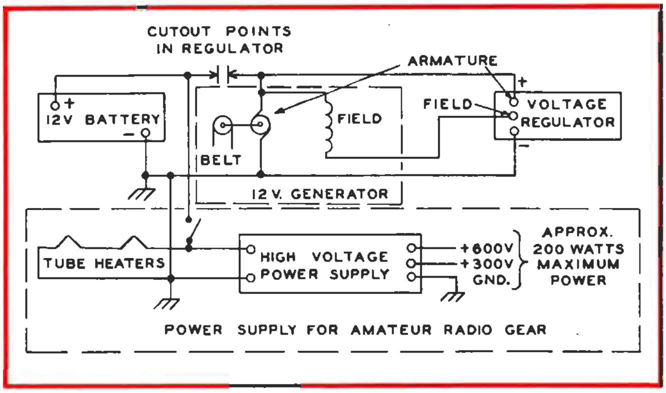

FIG. 2. BLOCK DIAGRAM of an alternator type automotive generating system which can be installed in place of the conventional DC generator. The alternator generates 3-phase AC power which is then rectified and used to charge the storage battery. The AC power is fed into a 3-phase high voltage power supply of up to 250 watts capacity. Tube heaters in radio equipment may be operated either from the DC battery power, or from the AC alternator output.

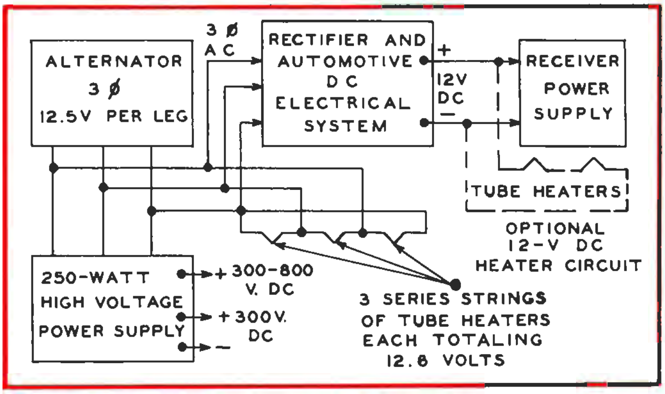

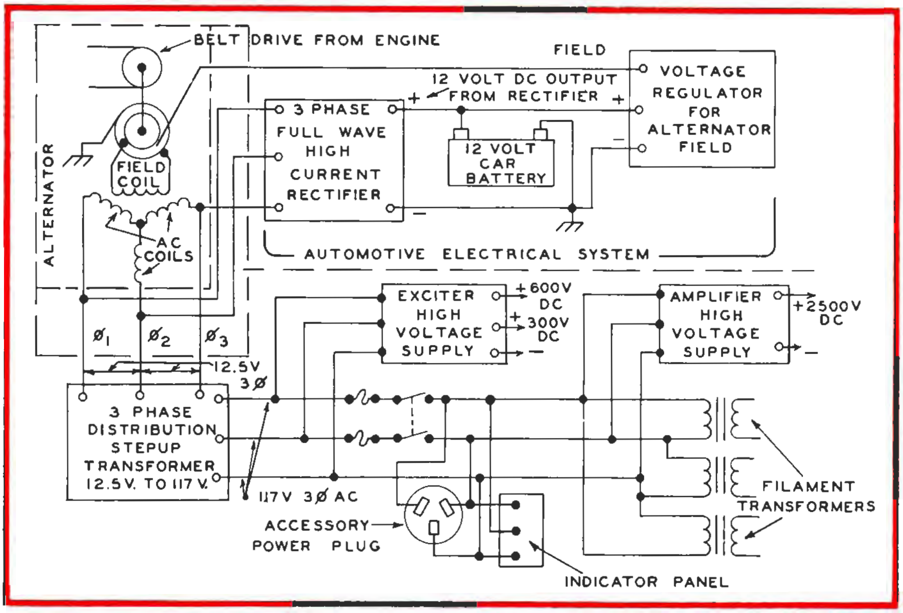

FIG. 3. DIAGRAM of the 3-phase automotive power system devised by the authors. The 3-phase 12.5-volt output from the alternator is stepped up to 117 volts with a home-made distribution transformer. Sufficient power for a full-kilowatt transmitter is available from the components specified in this article.

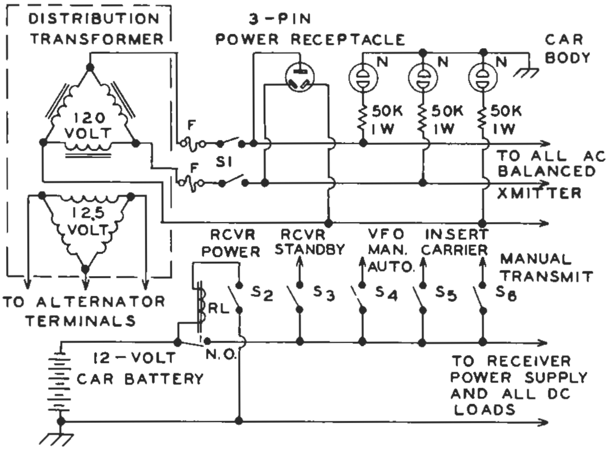

FIG. 4. CONTROL PANEL schematic diagram for the 3-phase AC electrical system. Fuses "F" and S_1 should be rated higher than the maximum current drawn from the AC circuit by the radio equipment. Switches S_2 to S_6 are SPST type toggles and energize DC relays which perform the functions indicated in the diagram.

W8DLD in the operator's seat of his high-power SSB mobile installation. Control panel is at center of dash, with voltmeters added to monitor the 12-volt DC and 117-volt AC circuits. Receiver is crystal converter into modified BC-453 Command Set tuner. Note hand key for CW operation just to left of steering wheel.

(continued from page 3)

Up to about 300 watts of DC power can be obtained from a 3-phase high voltage supply having transformers that step up the 12-volt AC alternator output to a few hundred volts. For higher power requirements, it is desirable to first step up the 12 volts to about 120 volts AC, and then use standard transformers in the high voltage DC power supply. This concept is illustrated in the complete mobile power supply systems used by W8DLD and W8WFH, shown in the diagram of Fig. 3.

The 3-phase distribution step-up transformers used in these installations, pictured on this page, were made by the authors. Constructional details are given in a folder which is available from the *G-E HAM NEWS* office. It also is possible to use three 12-volt to 120-volt step-up transformers with primaries and secondaries in a delta connection, but the efficiency and regulation may be not as good.

An essential part of the system is the control and indicator circuit shown in Fig. 4. All three neon lamps should light with the system in operation; one lamp not glowing indicates that one of the three AC phases may be grounded to the car. The polarized 3-prong plug is handy for operating soldering irons and other accessories. Control switches S_2 to S_6 operate 12-volt DC relays to perform the required functions.

Once the alternator installation is complete and the regulator is working properly, test the regulation of the 120-volt distribution transformer with the lamp load shown in Fig. 5. Measure the voltage in each phase with the three 60-watt lamps connected; it should be about 120 volts. Then close the DPST switch; about 110 volts should be indicated. Try this test at different engine speeds. The engine idling speed should be set so that the voltage reads at least 100 volts, with the full 780-watt load.

When planning the filament and plate power supplies for the radio equipment, make sure that a load balanced to within 5 percent is presented in the 3-phase system, both at 12 and 120 volts AC. Use three filament transformers for the equipment, one across each phase, with approximately the same power drains on each.

Plate power supplies designed for a 3-phase supply usually are closely balanced. Suggested circuits for high-voltage supplies are shown in Figs. 6 through 10. Characteristics of the various circuits are shown in TABLE I. Note that 3-phase rectifier circuits — particularly the full-wave types — feature low ripple voltage, low peak inverse voltages on the rectifiers, and high output voltage.

Use whatever components are available — rectifier tubes if you have filament transformers for the circuits of Figs. 6 and 7 — or silicon rectifiers in the circuits of Figs. 8, 9 and 10. Only 4 to 6 mfd. or filter capacitance is required on power supplies for r.f. equipment; a small 4-henry choke and two

(continued on page 7)

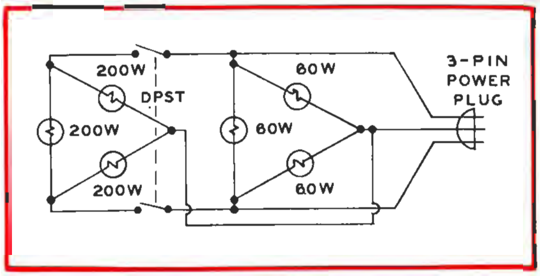

FIG. 5. CIRCUIT DIAGRAM for a 780-watt load with which the alternator may be tested after installation. Three 200-watt, and three 60-watt 117-volt lamps are used as loads across each of the three AC phases from the distribution transformer.

ENGINE COMPARTMENT VIEW of W8DLD's station wagon, showing Leece-Neville alternator in foreground and 3-phase distribution transformer mounted just ahead of it next to radiator.

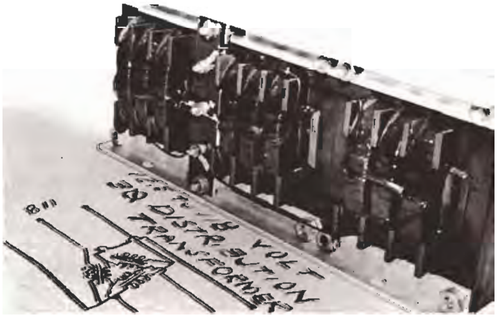

DISTRIBUTION TRANSFORMER completely assembled and ready for installation. Entire transformer has been impregnated with insulating varnish to protect it from the moisture present in hot weather.

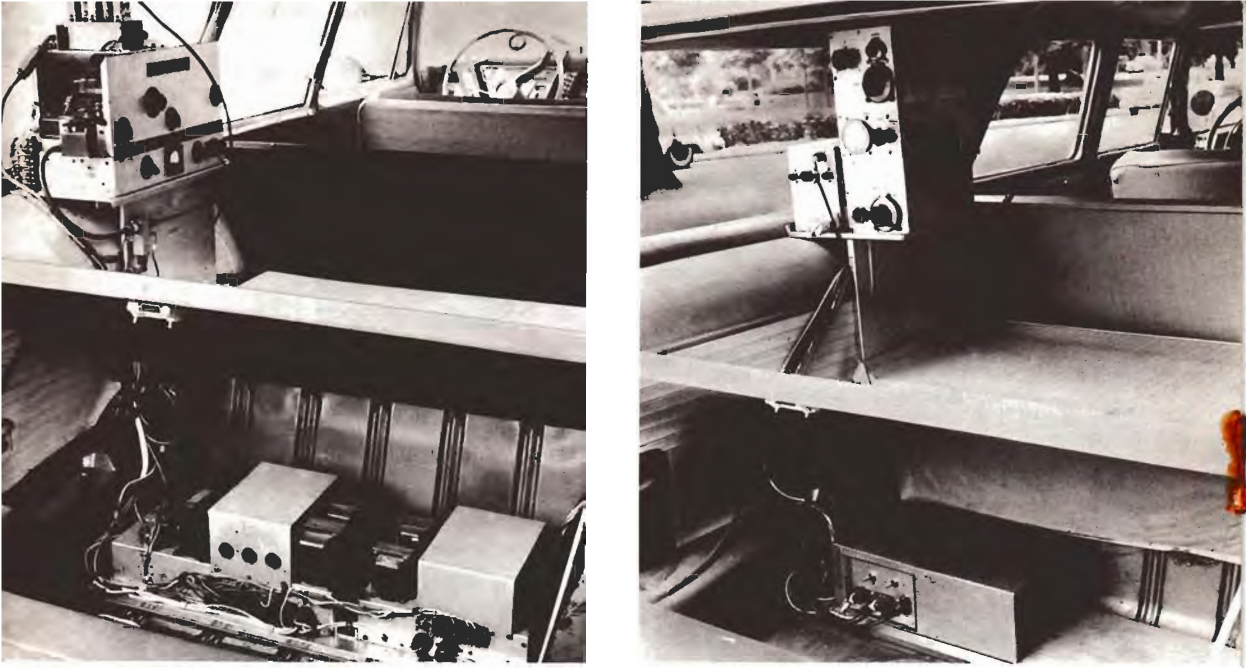

INSTALLATIONS OF POWER SUPPLIES and linear amplifiers in W8DLD's (left) and W8WFH's (right) station wagons. Storage compartments under cargo decks are handy locations for high voltage power supplies, while r.f. equipment is fastened to shelves atop rear wheel housings.

BIBLIOGRAPHY OF ARTICLES ON THREE-PHASE MOBILE POWER SYSTEMS

"A Different Approach to High-Power Mobile," by J. Emmett Jennings, W6EI; **QST,** April, 1953, page 28; also **ARRL Mobile Manual,** page 202.

"Three-Phase Power Supply for Mobile Use," by J. Emmett Jennings, W6EI; **QST,** January, 1958, page 28; also **ARRL Mobile Manual,** 2nd edition, page 183.

"Inside Leece-Neville," by D. W. Potter, W2GZD; **CQ,** May, 1955, page 16.

"High Power Three-Phase Mobile Power Supply," by M. Stevens, W8IWG; **CQ,** October, 1955, page 15.

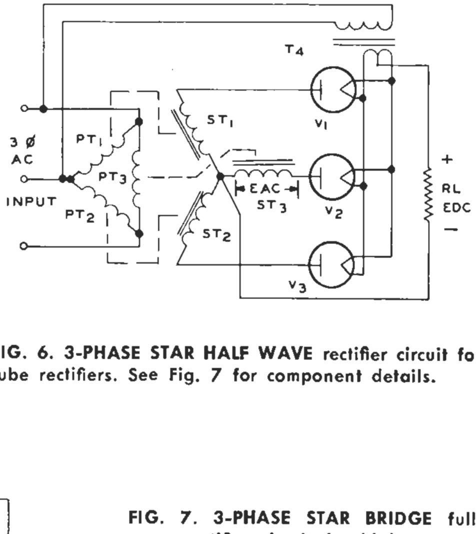

FIG. 6. 3-PHASE STAR HALF WAVE rectifier circuit for tube rectifiers. See Fig. 7 for component details.

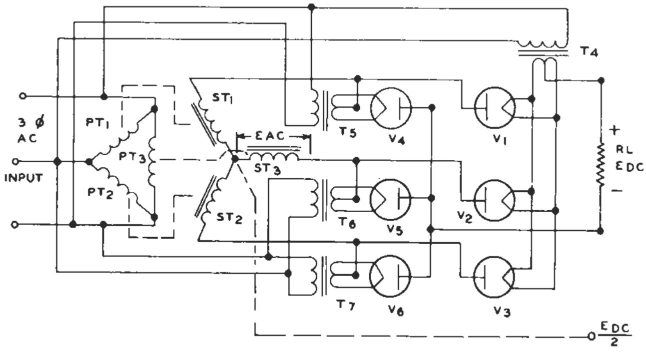

FIG. 7. 3-PHASE STAR BRIDGE full wave rectifier circuit for high vacuum (5U4-GB, 5AR4, etc.) and mercury vapor (GL-816, GL866A) rectifier tubes (V_1 to V_6). Transformers T_1, T_2 and T_3 (actually designated as "PT" and "ST" to indicate primary and secondary) are discussed in the text. Filament transformer T_4 should be rated for the current drain of three rectifier tubes; T_5, T_6 and T_7 are rated for one tube each. See TABLE I for voltage, current and peak inverse ratings.

TABLE I — 3-PHASE RECTIFIER CHARACTERISTICS

FIGURE NO.	6	7	8	9	10
AC secondary volts per 1,000 DC volts	855	428	855	428	740
DC volts output per 1,000 AC volts	1,170	2,340	1,170	2,340	1,350
Permissible DC output current above rating of single rectifier	300%	300%	300%	300%	300%
Peak inverse voltage per leg per 1,000 DC volts	2,090	1,050	2,090	1,050	1,050
Ripple frequency	3 f	6 f	3 f	6 f	6 f
Ripple voltage as percentage of DC output voltage	18%	4.2%	18%	4.2%	4.2%

(continued from page 5)

4-mfd. capacitors in a "brute force" filter are sufficient for exciter and audio equipment.

W8DLD uses the circuit of Fig. 7 with six GL-816 rectifiers and three 830-volt secondary transformers (Stancor PC-8301) in his 2,000-volt DC supply. A 300/600-volt dual output supply, using the circuit of Fig. 9, was made with three 120-to-240-volt, 50-watt step-down isolation transformers (Chicago SD-50). This powers his exciter and supplies screen voltage for a pair of GL-814 pentodes in his linear amplifier.

W8WFH uses a similar 300/600-volt power supply, plus a high voltage supply with the circuit of Fig. 9 and three 1,030-volt transformers (Stancor PC-8302) to obtain 2,500 volts DC to operate a pair of GL-4D21/4-125-A's in his linear amplifier.

Many amateurs will find the 3-phase alternator system to be the answer to their mobile power supply problems, just as W8DLD and W8WFH have found that it makes home-station results in signal reports possible from their mobile installation.

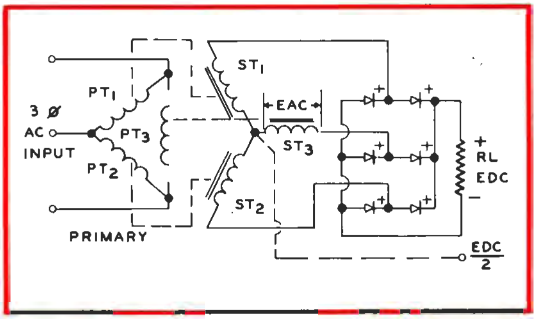

FIG. 9. 3-PHASE STAR BRIDGE rectifier circuit with silicon rectifiers. Approximately half to full DC output voltage can be obtained from the junction of the three high voltage windings, marked "$\frac{\text{EDC}}{2}$."

This half-voltage feature also can be obtained from the circuit in Fig. 7.

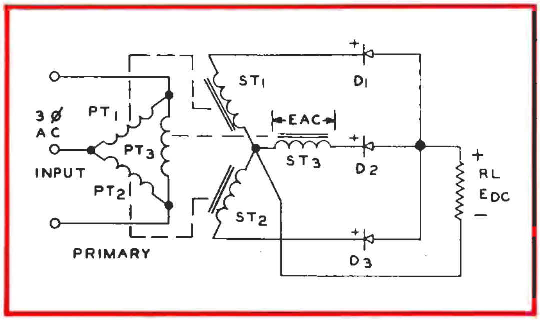

FIG. 8. 3-PHASE STAR HALF WAVE rectifier circuit with silicon rectifiers at D_1, D_2 and D_3. More than a single rectifier in each leg of the circuit will be necessary for output voltages above 200 volts. G-E type 1N1695 silicon rectifiers are suitable.

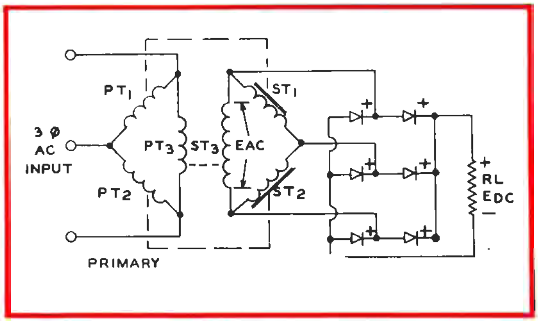

FIG. 10. 3-PHASE DELTA BRIDGE full wave rectifier circuit with silicon rectifiers. The "delta" connection of the high voltage windings reduces the DC output voltage to about 58 percent that of the star bridge circuit in Fig. 9, using the same transformers.

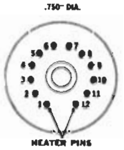

GENERAL ELECTRIC Announces...

COMPACTRON

Multi-function Devices

A new electronic device that combines into one unit the functions now performed by several components has been announced by G.E.'s Receiving Tube Department.

Combining the functions of two and more conventional miniature receiving tubes into a single envelope, "Compactron" devices make possible amateur communication receivers with four or five such envelopes containing all the functions now performed by a ten or eleven-tube receiver.

Table radios with two "Compactron" devices replacing the present five-tube lineup, and television receivers with ten such devices containing the same circuitry now requiring fifteen tubes, also are envisioned. Significant reductions in cabinet size also are possible with this new component.

"Compactron" devices use a new 12-pin base with a pin circle 0.750 inches in diameter, shown above at the right. Seated heights (see photo above) range from 1 to 2¾ inches, with a bulb diameter of 1⅛ inches. They will be in production soon. *G-E HAM NEWS* is planning construction articles containing "Compactron" devices for 1961.

HAM NEWS

Available FREE from your G-E Tube Distributor

JULY-AUGUST, 1960
VOL. 15—NO. 4

E. A. Neal, W4ITC — Editor

HOW-TO-DO-IT IDEAS
from the 999 radio amateurs at
GENERAL ELECTRIC

published bi-monthly by
RECEIVING TUBE DEPARTMENT
Owensboro, Ky.

DES ROBERTS
24-6[illegible] [illegible]. VERNON STREET
LYNN, MASSACHUSETTS

HAM NEWS

CRYSTAL CONTROLLED

MOBILE CONVERTERS

PART II of the three-part series on high power mobile radio systems by W8DLD and W8WFH describes their bandswitching and single band converters, plus conversion suggestions for the BC-453 receivers which function as tunable IF amplifiers. This series started with PART I—Mobile Power Supply Ideas—in the July-August, 1960 issue. PART III—MOBILE LINEAR AMPLIFIER—will appear in the November-December issue.

W8WFH's bandswitching converter, and the metering panel and power control box, all form a neat under-dash package in the above view. The tuning dial on the converter actually tunes the BC-453 receiver—tucked up on the firewall at the right side of the car—through a flexible shaft.

—Lighthouse Larry

SEPTEMBER-OCTOBER, 1960

in this issue:

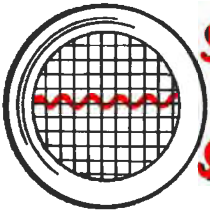

SCANNING the SPECTRUM

MOBILE SSB RECEPTION . . .

Successful reception of single and double sideband signals in a mobile radio system requires that the receiver have excellent frequency stability, on the order of cycles at several megacycles. Also, sufficient selectivity to attenuate signals on adjacent channels is highly desirable.

The double conversion superhetrodyne receiver circuit, when properly applied, will meet both of these major requirements. It makes possible using crystal control in the high frequency oscillator for the first frequency converter when a band only a few hundred kilocycles wide — such as an amateur band — will be tuned by the receiver.

The tunable portion of the receiver can then be operated much lower in frequency where tunable oscillators for the second converter can easily be built with a stability within a hundred cycles. Some top-performing amateur radio receivers utilize this principle.

The double conversion receiver principle has been applied by W8DLD and W8WFH to attain excellent stability and selectivity at low cost by using the BC-453 Command Set receiver, covering 190 to 550 kilocycles, as a tunable i.f. amplifier preceded by high-frequency converters with crystal-controlled oscillators. The selectivity and stability of the BC-453 are widely recognized in amateur radio circles.

The tunable oscillator in the BC-453 operates sufficiently low in frequency, and is mechanically rugged, to minimize the effects of temperature and power supply voltage variation, and shock and vibration upon its stability. Of course, the crystal-controlled oscillators in the amateur band converters have excellent stability too.

Incidentally, here is a more complete listing of crystal frequencies which can be used in the converters described herein than the crystals covered in the coil tables. The listing also shows the harmonic of the crystal oscillator required for injection to the mixer, the signal frequency ranges covered, and the tuning range of the BC-453 receiver for each crystal.

CRYSTAL FREQUENCY CHART

CRYSTAL FREQ. (MC)	HARMONIC	INJECTION FREQ. (MC)	BAND TUNED (MC)	BC-453 RANGE (MC)
3.2	Fund.	3.2	3.5- 3.85	0.2-0.55
3.5	Fund.	3.5	3.7- 4.0	0.2-0.5
6.8	Fund.	6.8	7.0- 7.3	0.2-0.5
6.9	2nd	13.8	14.0-14.35	0.2-0.55
4.6	3rd	13.8	14.0-14.35	0.2-0.55
6.933	3rd	20.8	21.0-21.35	0.2-0.55
5.2	4th	20.8	21.0-21.35	0.2-0.55
6.967	3rd	20.9	21.1-21.45	0.2-0.55
5.225	4th	20.9	21.1-21.45	0.2-0.55
6.975	4th	27.8	28.0-28.35	0.2-0.55
7.0	4th	28.0	28.2-28.55	0.2-0.55
7.075	4th	28.3	28.5-28.85	0.2-0.55
7.15	4th	28.6	28.8-29.15	0.2-0.55
7.225	4th	28.9	29.1-29.45	0.2-0.55
7.3	4th	29.2	29.4-29.75	0.2-0.55

The BC-453 receiver will work fine with 150 volts on the plates. If 300 or more plate volts are applied, bypass capacitors may fail. W8DLD suggests using a VR-150 or 0A2 regulator tube to hold the plate voltage down to 150 volts. Use a power supply with at least 200 volts output and drop the voltage with a 10-watt adjustable resistor, set so that the VR tube is ignited at all times.

Try the converter/BC-453 receiving combination described in this issue. I'm sure you'll be pleased with its performance.

SUPER POWER RIGS . . .

The one-kilowatt power maximum input of the biggest amateur transmitters is dwarfed by General Electric's new 250-kilowatt short wave transmitters being constructed for the Voice of America. They're also many times larger in size — 22 feet long, 10 feet high and 12 feet wide — as compared with most amateur rigs.

Six of the new transmitters, being built for the U.S. Information Agency's VOA East Coast installation near Greenville, N.C., are the largest high frequency transmitters manufactured by General Electric in its 40 years in the communications field.

Each transmitter will include special engineering devices to meet VOA requirements for increasing the intelligibility of reception in foreign lands, where they lay down a whale of a signal, again by comparison with amateur radio signal levels.

73 until next issue,

—*Lighthouse Larry*

HOW TO GET *G-E HAM NEWS* . . .

G-E HAM NEWS is available free of charge if you pick it up from your local G-E Tube distributor. Some distributors mail copies locally to their customers. Or, for those who prefer receiving copies directly from us, we have a low-cost subscription plan at $1.00 per year. Order your subscription from: **G-E HAM NEWS**, General Electric Company, Receiving Tube Department, 316 E. Ninth Street, Owensboro, Kentucky, U.S.A.

BANDSWITCHING MOBILE CONVERTER

By W. C. Louden, W8WFH

MOBILE OPERATION on several amateur bands requires that the transmitting and receiving equipment in the installation — as well as the antenna — be constructed to be switched readily to the band on which operation is desired at a particular time. A bandswitching converter with crystal controlled oscillator, designed to work into a receiver covering an established intermediate frequency tuning range, can be constructed in little more space than is needed to house a converter covering only a single band.

The converter used at W8WFH/M, however, also incorporates a remote tuning dial which simply drives a flexible shaft coupled to the receiver, mounted up under the right side of the dash in the car. Other controls for the i.f. receiver — r.f. gain, audio gain, AVC switch, and sideband selector switch — also were built into the converter, although these controls and the dial could easily have been located elsewhere.

SEPARATE COILS were used in each of the r.f. circuits of the converter shown in the schematic diagram, Fig. 1, to cover the five amateur bands from 3.5 to 30 megacycles. A 6CB6 sharp cutoff r.f. pentode functions as the r.f. amplifier, while the pentode section of a 6U8 (or 6U8-A) is the mixer. The triode 6U8 section is the crystal oscillator.

(continued on page 4)

TABLE I — PARTS LIST — BANDSWITCHING CONVERTER

C_1	5-35 mmf midget air variable.
C_2	5-140 mmf midget mica padder.
J_1, J_2	auto radio type antenna connectors; or, midget phono jacks.
L_1 to L_4	r.f., mixer and oscillator coils on CTC LS-6 iron slug-tuned coil forms; see COIL TABLE for details on windings.
RFC_1	0.5 millihenry pi-wound r.f. choke.
RFC_2	2.5 millihenry pi-wound r.f. choke, tapped between first and second pies.
S_1	(S_{1A} to S_{1E}) 5-pole, 5-position, 5-section midget rotary tap switch.
S_2, S_3, S_4	1-pole, 2-position midget slide switches.
X_1	Quartz frequency control crystals, 5 required; see COIL TABLE for frequencies.

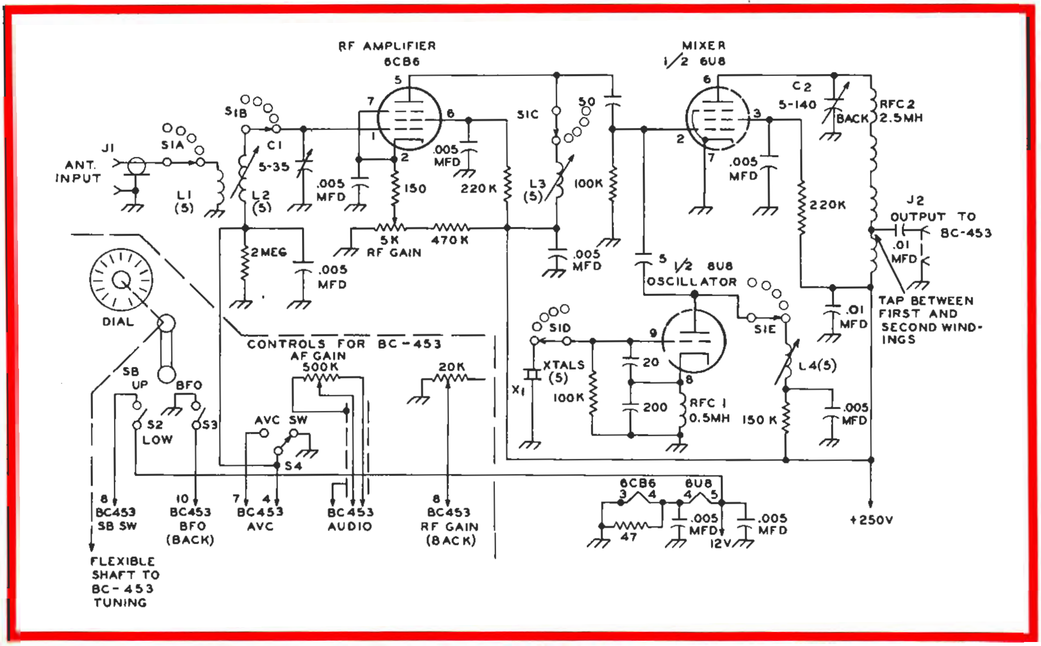

FIG. 1. SCHEMATIC DIAGRAM of the bandswitching mobile converter constructed by W8WFH. All resistances are in ohms, ½-watt rating, and capacitances are in micra-micrafarads (mmf), unless otherwise marked. All controls at the lower left corner are for the BC-453 receiver with which this converter is used. Only one set of coils is shown for L_1, L_2, L_3 and L_4; actually there are five coils in each of these locations, each connected to a separate position on S_{1A} to S_{1E}.

PANEL VIEW PHOTO of the bandswitching converter. Only the controls marked "RF GAIN," "ANT.," and "80-40-20-15-10" (the bandswitch) actually control circuits in the converter.

(continued from page 3)

The crystal oscillator functions at the crystal fundamental frequencies to cover the 3.65-4.0 and 7.0-7.3 tuning ranges, as shown in TABLE II—COIL TABLE. For 14.0-14.35 megacycles, the second harmonic (13 megacycles) of the 6.9-megacycle crystal is the injection frequency, while the fourth harmonic of a 5.25-megacycle crystal (21.0 megacycles) is used to cover 21.10-21.45 megacycles. Five crystals in the range of 6.95 to 7.2875 megacycles are required for complete coverage of the 28-megacycle band. However, the fourth harmonic (28.3 megacycles) of a 7.075-megacycle crystal will give coverage of 28.5 to 28.85 megacycles where most sideband operation occurs on this band. Other crystal combinations are suggested in

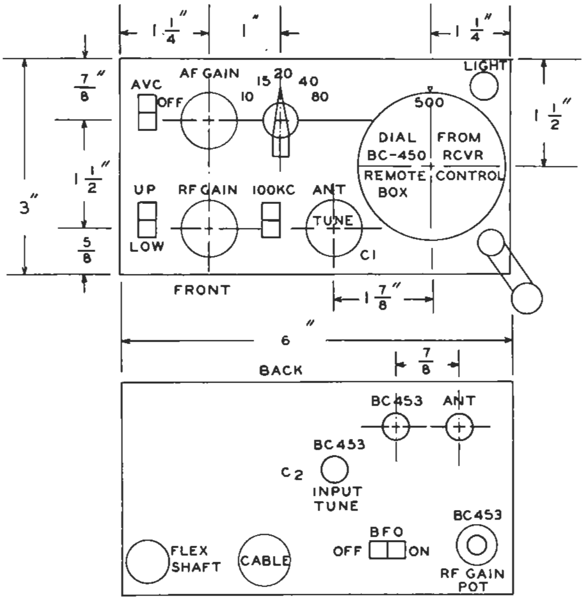

FIG. 2. FRONT AND REAR panel drilling diagrams for the bandswitching converter. The slide switch marked "100 KC" applies plate voltage to a 100-kilocycle crystal calibrator which the author included in his converter, but is not shown in the schematic diagram, Fig. 1. All the BC-453 controls could be mounted on a separate panel to reduce crowding in the converter, if desired.

TABLE II — COIL TABLE — BANDSWITCHING CONVERTER

AMATEUR BAND (MC)	CRYSTAL FREQ. (MC)	INJECTION FREQ. (MC)	COILS (inductance in uh and CTC Part No.)			
			L_1 (turns)	L_2	L_3	L_4
4	3.5	3.5	10 of #30 enam.	16-30 + 30* (X2060-5)	61-122 (X2060-7)	61-122 (X2060-7)
7	6.8	6.8	7 of #30 enam.	10-18 (X2060-4)	16-30 + 30* (X2060-5)	28-63 (X2060-6)
14	6.9	13.8	5 of #30 enam.	3.4-7.0 (X2060-2)	3.4-7.0 + 10* (X2060-2)	16-30 (X2060-5)
21	5.25	21.0	3 of #30 enam.	2.0-3.7 (X2060-1)	2.0-3.7 (X2060-1)	2.0-3.7 (X2060-1)
28	7.075	28.3	2 of #30 enam.	17 turns of #24 enam.	22 turns of #26 enam.	22 turns of #26 enam.
			(Wind 28-MC coils on CTC LS-6 Forms)			

*Small ceramic capacitor across coil where indicated — otherwise only circuit capacitance.

TOP VIEW PHOTO of the band-switching converter model. The 100-kilocycle crystal calibrator components are fastened to the small angle bracket in the upper portion of this view. The band-switch was built up from a Centrolab midget tap switch index assembly (PA-302), and five switch wafers (PA-31). Although this 6 x 6 x 3-inch box was fabricated by the author, the converter can easily be housed in a 7 x 5 x 3-inch Minibox if the BC-453 controls are not included.

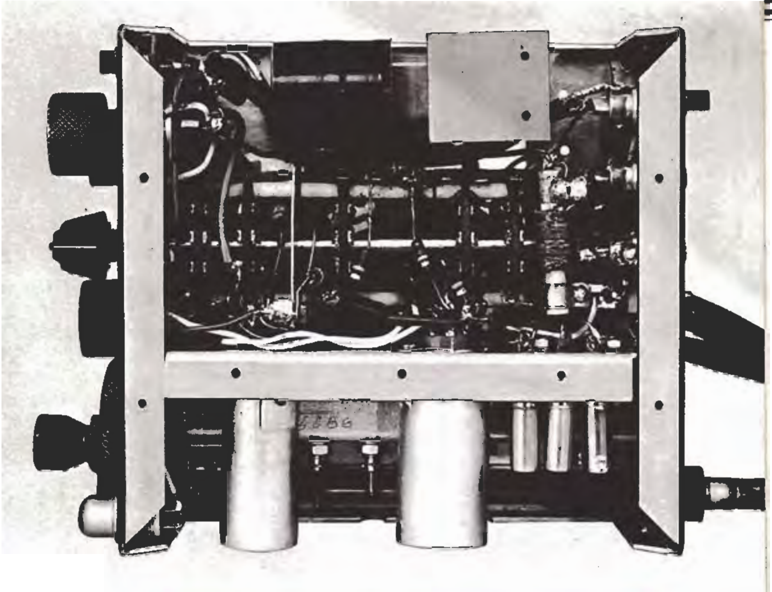

the CRYSTAL FREQUENCY CHART for the converters on page 2 of this issue. Oscillator coils (L_4) tune to the crystal harmonic frequency being used.

A 2.5-millihenry r.f. choke, tapped between the first and second pies from the end to which plate voltage is applied, serves as the converter output circuit and is peaked at the desired frequency in the 190 to 550-kilocycle tuning range of the BC-453 receiver with C_2. An alternate output circuit, shown in Fig. 2 of the single band converter article on page 8, also is suitable for this converter.

CONSTRUCTION of the model shown in the photos was accomplished in a 6 x 6 x 3-inch home-fabricated box made in two sections. However, the converter can be constructed into a 7 x 5 x 3-inch Minibox (Bud CU-3008) if the remote tuning dial and BC-453 controls are not included in the box. Or, these controls can be included when the converter is constructed in a Minibox 8 x 6 x 3½ inches (Bud CU-3009) in size.

Dimensions are given in the panel layout diagram, Fig. 2, the box layout diagram, Fig. 3, and the subchassis layout diagram, Fig. 4, for the 6 x 6 x 3-inch box, but will serve as a guide for the larger standard Miniboxes suggested above. It is best to select the box size to fit into the space available in each individual mobile installation.

Major parts were mounted in the locations shown in the above diagrams, and should be kept in the same relative positions in the larger boxes. The subchassis has a ½-inch step, as shown in the side view, and was made with narrow flanges along the upper, lower and rear edges to facilitate rigid mounting.

Wiring should be handled in the usual manner for high-frequency circuits: Shortest possible grid, plate and coil leads; disc ceramic bypass capacitors soldered with shortest possible leads; power wiring run well away from r.f. coils; and short lengths of coaxial cable for the antenna input and output connections to the BC-453 receiver.

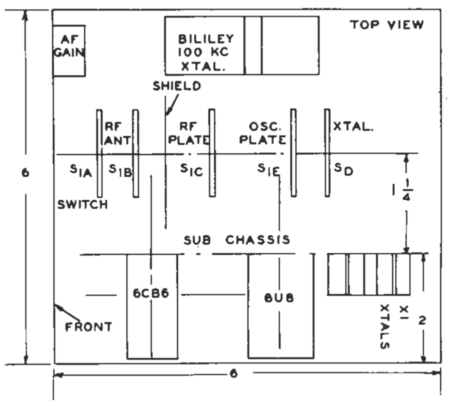

FIG. 3. TOP LAYOUT DRAWING of the converter. The subchassis should be trimmed to clear the top flanges on the box.

THE TUNEUP PROCEDURE is quite simple, once construction is completed and a check has been made of the heater and plate power circuits to ensure that the correct voltages appear on both tubes. Plate voltages will be the same as the power supply voltage, and screen voltages will range from 100 to 120 volts on both the 6CB6 and 6U8 tubes.

The crystal oscillator should be adjusted first. A general coverage receiver is helpful in checking to see that the oscillator works on all bands, and that the plate coils (L_4) are tuned to the correct harmonic frequency. Set S_1 to the 3.5-megacycle position, tune the receiver to 3.5 megacycles, and tune the 3.5-megacycle L_4 for maximum signal in the receiver.

Next, switch S_1 to 7 megacycles, set the receiver at 6.8 megacycles and tune the 7-megacycle L_4 for maximum signal. For 14

(continued on page 6)

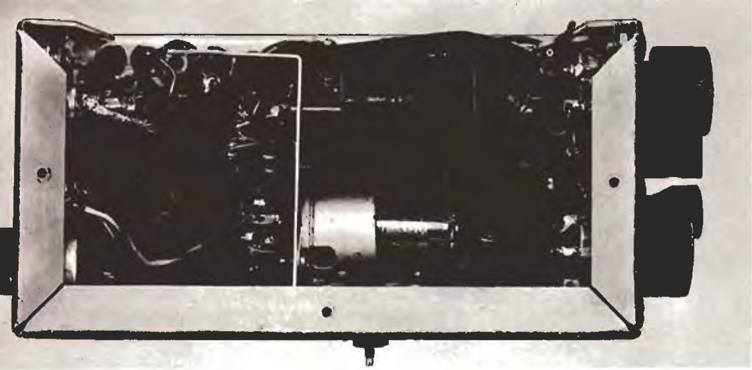

PHOTO SHOWING LEFT side of the converter. The crystal calibrator components—tube, crystal, tuning capacitor (extending out bottom) and angle bracket—are in the center. Flanges on box are ⅜ of an inch wide.

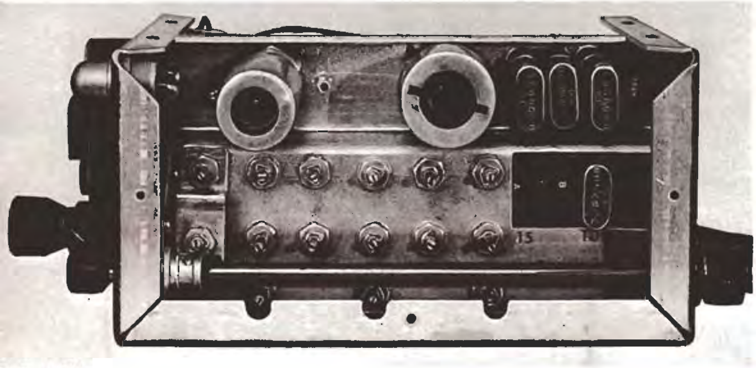

PHOTO SHOWING RIGHT side of the converter, with some crystals (X_1) removed to show double crystal sockets. Positions of the coils on the subchassis are shown in Fig. 4. The remote tuning dial shaft runs back through the converter just below the coils.

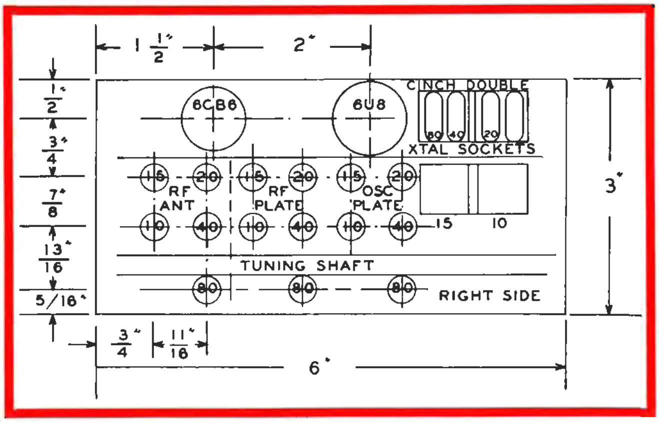

FIG. 4. LAYOUT DIAGRAM for the converter subchassis on which the tube sockets, coils and crystal sockets are mounted. Holes not marked for location and size should be drilled to suit the components used. The subchassis has a ½-inch step between the coils and tube sockets.

(continued from page 5)

megacycles, set S_1, tune the receiver to 13.8 megacycles, and tune the 14-megacycle L_4 for maximum signal. For 21 and 28 megacycles, calculate the correct harmonic frequency of the crystal being used, set the receiver at that frequency, and peak the proper L_4 coils.

FRONT-END ALIGNMENT consists simply of peaking the mixer grid (L_3) and r.f. amplifier grid (L_1-L_2) coils at the center of the tuning range for each band. The converter output should, of course, be connected to the BC-453 receiver, and a signal generator — or amateur band signals from an external antenna — should be fed into the converter input, J_1.

Set the BC-453 receiver at about 350 kilocycles and set C_1—the r.f. stage grid peaking capacitor — at mid-capacitance. Tune the mixer grid coils (L_3) first for maximum signal at these frequencies, and then peak the r.f. coils (L_1-L_2) for each band. Either the signal generator, or external signals close to the specified frequencies, may be used.

The alignment may be completed before the converter is "buttoned up" by installing the top half of the box, since the coils are sufficiently removed from it to have little effect on the inductance values.

Both converter power and remote control connections were made through a 12-pin plug and cable running to the BC-453 receiver. Length of this cable, and the flexible shaft for tuning, will be determined by the space available in the constructor's car, and probably will be from 24 to 36 inches long.

SINGLE-BAND MOBILE CONVERTERS

By. A. F. Prescott, W8DLD

THE SINGLE BAND approach appeals to many mobile amateur radio operators who concentrate their operations mainly on one or two bands because of space limitations, or the nature of local activity. The equipment can be constructed easier because of the absence of a bandswitch and multiple sets of coils. Those amateurs who work two bands can construct plug-in r.f. units for the receiver front end — and transmitter too — and achieve optimum performance on each band.

At W8DLD/Mobile, five single-band converters were constructed to cover the amateur bands from 3.5 to 30 megacycles. All units have plug-in connections for easy changing, and follow the same basic circuit. Because of the fairly low frequency chosen for the tunable i.f. range — 200 to 550 kilocycles — four tuned circuits at the signal frequency were included in each converter for maximum rejection of image signals. These image signals will be twice the frequency to which the BC-453 is tuned away from the amateur band signal frequency: An image frequency 400 kilocycles below the signal frequency when the BC-453 is tuned to 200 kilocycles; and an image frequency 1,000 kilocycles below the signal frequency when the BC-453 is tuned to 500 kilocycles.

The triode section of a 6U8 pentode-triode functions as a grounded-grid r.f. amplifier, as shown in the schematic diagram, Fig. 1. The antenna input circuit is untuned, with only a 2.5-millihenry r.f. choke in the cathode DC return. Coils L_1 and L_2 form a bandpass coupler which feeds the pentode section of the 6U8 as a second r.f. amplifier, with an r.f. gain control in its cathode circuit.

(continued on page 8)

TABLE I — PARTS LIST — SINGLE BAND CONVERTER

C_1	midget silvered mica or ceramic capacitor; try valves from 1 mmf to 5 mmf for optimum oscillator injection without excessive oscillator harmonic signal input.
C_2	5-140 mmf midget air capacitor.
J_1	midget phono jack.
L_1 to L_5	Bandpass transformers made from Merit TV-104 or TV-108 shielded coils; see TABLE II—COIL TABLE, and text for details.
P_1	6-pin male chassis type power plug (Jones P-306-AB).
RFC_1	1 millihenry pi-wound r.f. choke (National R-50, 1 mh.).
RFC_2	2.5 millihenry pi-wound r.f. choke, tapped between first and second pies.
X_1	Quartz frequency control crystals; see TABLE II — COIL TABLE, for frequencies.

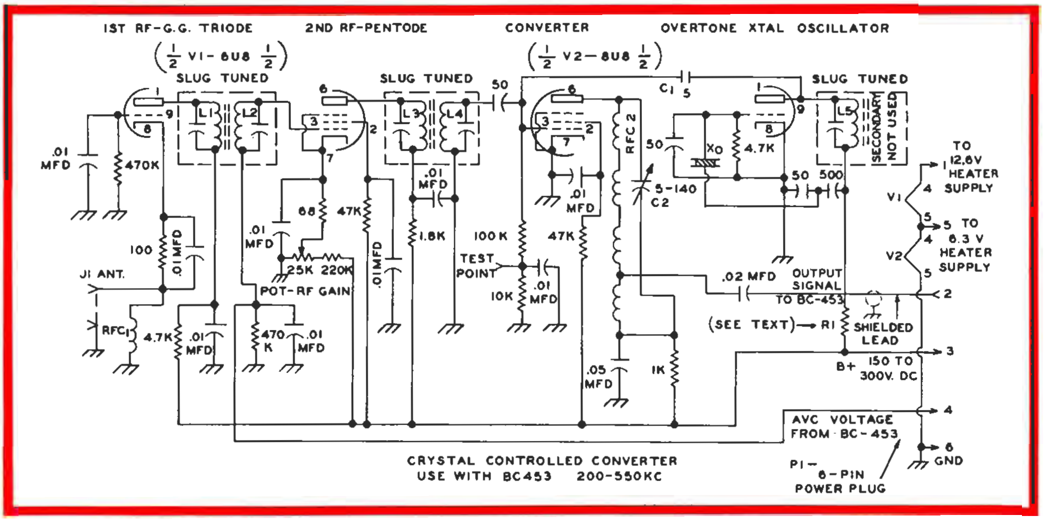

FIG. 1. SCHEMATIC DIAGRAM for the single band converters designed and constructed by W8DLD. All resistances are in ohms, ½-watt rating, and capacitances are in micra-microfarads, if not otherwise marked. The output signal runs through pin 2 on the power plug, P_1. Note that 6 valts DC should be applied to pin 5, and pin 1 grounded, for operation of the converter from 6 volts.

TABLE II — COIL TABLE — SINGLE-BAND CONVERTERS

AMATEUR BAND (MC)	PART NO. (MERIT)	ALTERATIONS TO BE PERFORMED ON COILS L_1 TO L_5, INCLUSIVE
4	TV-108 (4.5-MC TV IF)	Remove coils from forms. Replace with single pies (same position) from 2.5-mh. r.f. choke. Remove turns from inside of pies until coils fit on forms at original coil positions. Remove more turns until circuits tune to 4.3 MC with slug out and 25-mmf capacitors across each coil in place of original capacitors.
7	TV-108	Remove 50-mmf capacitors across TV-108 coils and replace with 20-mmf capacitors. Remove turns from original coils until each circuit tunes to 7.5 MC with slug all the way out.
14	FM-251 (10-5-MC FM IF)	Turn slugs nearly all the way out of coils and remove turns from each coil until each circuit tunes to 14.8 MC. Use original capacitors across coils.
21	TV-104 (21-MC TV IF)	No alterations required in either coils or capacitors. Tune each circuit to 21-MC band to achieve proper bandpass.
28	TV-104	Turn slugs nearly all the way out of coils and remove turns from each coil until each circuit tunes to 30 MC.

(continued from page 7)

The second pair of coils, L_3 and L_4, couple the signal into the pentode section of a second 6U8, operating as a mixer. The triode section of this tube is the crystal oscillator, operating either on the fundamental or harmonics of the crystal, as described in the bandswitching converter. Oscillator signal injection is through a small coupling capacitor. Values from 2 to 5 mmf should be tried, to obtain optimum oscillator injection.

Plate circuit of the mixer is again a 2.5-millihenry r.f. choke (RFC_2), with the i.f. output signal tapped off between the first and second pies. An optional mixer output circuit, using a Miller No. 70-A broadcast receiver antenna coupling coil, is shown in Fig. 2. The antenna winding is used for the output link to the power plug, P_1.

THE CHASSIS on which all converters were constructed is a 5¼ x 3 x 2⅛-inch Minibox (Bud CU-3006) and provides plenty of room

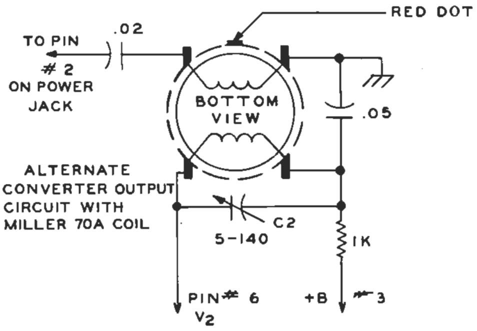

FIG. 2. **OPTIONAL OUTPUT CIRCUIT** for the converters, using a Miller 70A miniature broadcast receiver antenna coil with the primary as the output link coil. This circuit can be substituted for RFC_2 in either the bandswitching or single-band converters.

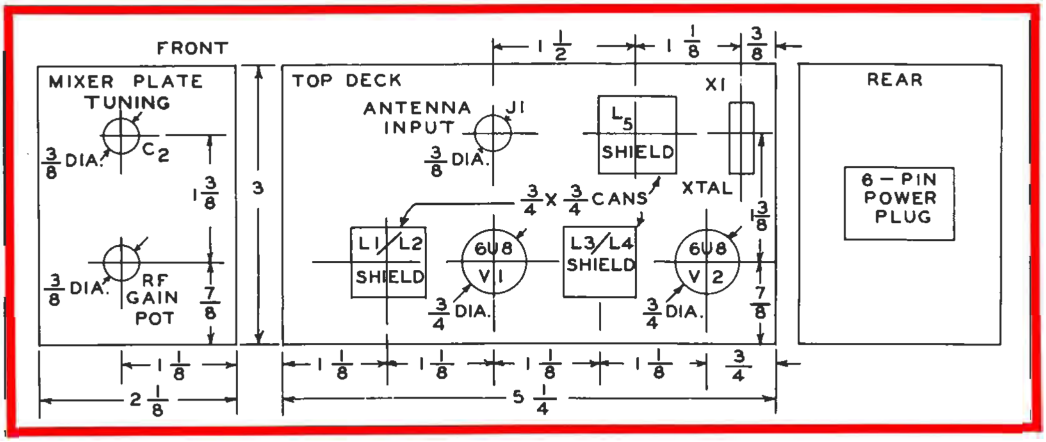

FIG. 3. **CHASSIS LAYOUT DIAGRAM** for the single-band converters. The chassis is a 5¼ x 3 x 2⅛-inch Minibox (Bud CU-3006). The same parts layout was used for all five of W8DLD's converters.

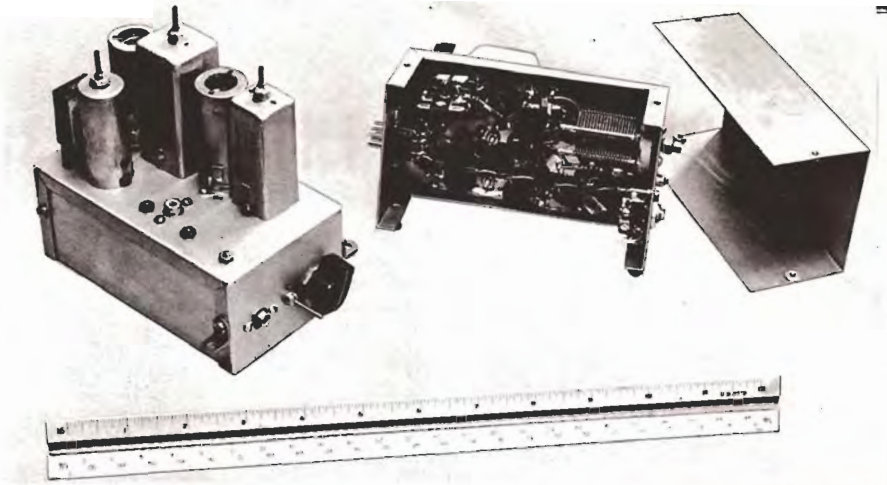

SINGLE-BAND converter views, with completely assembled model at left, and model with bottom cover removed at right. Placing all tuned circuits in shields above the chassis reduces interaction and leaves plenty of room for small components under the chassis.

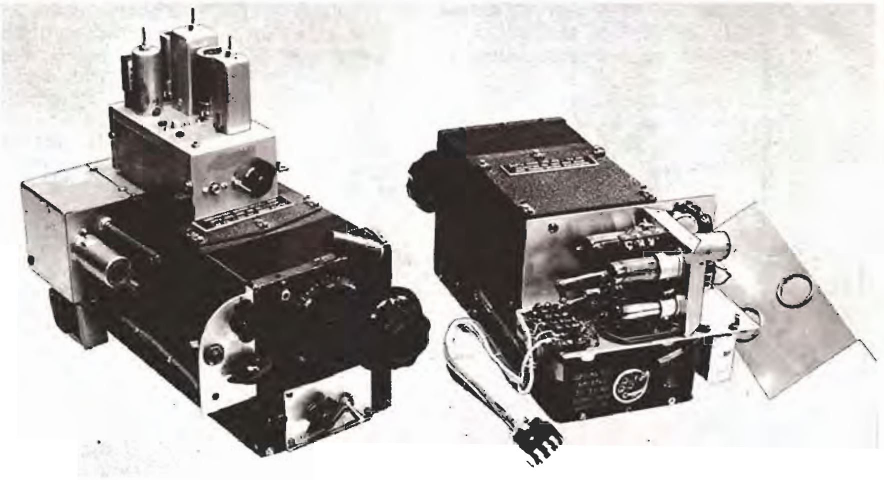

COMPLETE RECEIVER, composed of BC-453, modified as described on pages 10 and 11, and the crystal controlled converter mounted on the top shield (at left). Rear view at right shows audio amplifier constructed on small plate, occupying space in which dynamotor mounts on original receiver.

for the components specified in TABLE I—PARTS LIST. The same general parts layout, shown in the drilling diagram, Fig. 3, was used for all converters.

The alterations necessary on coils L_1 through L_5 — as described in TABLE II — COIL TABLE, and the coils checked for proper frequency coverage with a grid-dip oscillator — should be made before the shield cans are fastened to the chassis.

The usual precautions regarding short r.f. wiring and bypass capacitor leads apply to all converters, and especially the 21 and 28-megacycle models. The tube heaters may be operated from either a 6 or 12-volt supply by making the proper connections when wiring the Jones cable jack which connects to P_1.

ALIGNMENT of the crystal oscillator stage consists simply of peaking L_5 for maximum signal in a receiver tuned to the proper harmonic frequency for the crystal and band in use. After coupling the BC-453 receiver to the output, and feeding in a signal of the proper frequency into J_1, the signal circuits, L_1 to L_4, may be aligned. Peak coils L_2 and L_4 (the bottom adjustments) about 50 kilocycles inside the high edge of the amateur band for which the converter is designed (3.95 megacycles on the 4-megacycle converter). Peak coils L_1 and L_3 from 100 to 200 kilocycles lower in frequency, so that the converter has nearly uniform gain across the portion of the amateur band most used. Coils L_1 and L_3 are made the top adjustments so that the converter bandpass can be easily changed for maximum performance either in the American phone, or CW assignments of the amateur bands.

The converters, when completed and aligned, may be mounted on top of the BC-453 receiver, as shown in the picture above.

At W8DLD/Mobile, the converters were mounted on top of the linear amplifier for the sideband transmitter in the rear of the station wagon (as shown in the view on the top left corner of page 7 in the July-August, 1960 issue). This permits a short connection to the antenna changeover relay — also on the linear amplifier — and changing converters when bands are switched in the amplifier. A coaxial cable feeds the i.f. output signal from the converter to the BC-453 receiver, mounted below the dash (see picture on page 4 of the July-August, 1960 issue).

Converters of this type have traveled over 120,000 miles in W8DLD's mobile installations, and the models described incorporate the lessons learned during this vast amount of "field testing."

CONVERTING THE BC-453 RECEIVER

By A. F. Prescott, W8DLD, and W. C. Louden, W8WFH

CONVERSION DATA for the BC-453 Command Set Receiver has been widely published. However, here are suggestions for making the basic conversion, plus adding a more powerful audio amplifier, fast-acting AVC and S-meter circuit, and a sideband selector switch.

HEATER CIRCUIT—

To operate the BC-453 tube heaters from a 6-volt supply, rewire all heater connections to the sockets in parallel. Install 6-volt tubes: three 6SK7's, one 6K8, one 6SR7, and one 6J5 or 6C5 in the audio (V8), changing no socket connections other than tying pin 7 to pin 1.

For 12-volt heater supply operation, either rewire all heaters in parallel and use the original 12-volt tubes (three 12SK7's, one 12K8, one 12SR7, and substituting a 12J5 for the 12A6); or, use the original heater circuit and install 6-volt heater tubes which each draw 0.3 amperes (same 6-volt tubes as shown above).

AUDIO AMPLIFIER—

The original audio amplifier in the BC-453 may be sufficient for home-station operation under quiet conditions, but more volume is sorely needed to overcome the various noises encountered in mobile operation. A 5-watt amplifier and speaker in the 6 to 8-inch diameter range will provide plenty of sound.

A 3-stage amplifier circuit, shown in the schematic diagram, Fig. 1, was devised, and is easily driven by a 6J5 or 12J5, substituted for the original 12A6 pentode power audio amplifier in the BC-453. One section of a 12AX7 twin triode is a voltage amplifier; the other section functions as a phase inverter, driving the grids of a push-pull output stage with 12AQ5's (6AQ5's for a 6-volt heater supply).

The circuit constants shown provide good frequency response, but the higher audio frequencies will be accentuated if a 0.1-mfd capacitor is wired across the cathode resistor of the 12AX7 audio amplifier. A 0.006-mfd capacitor across the output transformer attenuates higher audio frequencies.

The audio amplifier was constructed on a small metal plate about 4 inches square with flanges on all sides for mounting. Wiring should follow the usual practices for audio amplifiers. Note that the audio output signal from the BC-453 was taken from pin 2 of the plug on the rear of the chassis, as shown in the view on page 9.

FAST-ACTING AVC/S-METER CIRCUIT—

The operation of this fast-acting AVC circuit which can be added to the BC-453 receiver must be heard to be appreciated. The S-meter was designed to work on CW, sideband or amplitude modulated phone signals. The two-tube package, added in a small box to the left side of the receiver in the view on page 9, is well worth its weight in operating convenience.

Note in the schematic diagram, Fig. 2, that the 85-kilocycle signal from the BC-453 is picked up at the control grid of the first i.f. amplifier (V_5) so that the AVC amplifier stage, a 12AU6 pentode, will be completely free of stray BFO voltage. The selectivity of this amplifier must be broader than the signal channel in order to reduce the gain of the receiver when strong adjacent channel splatter is present. The "Q" of L_1 should not be too high, or the 85-kilocycle tuned circuit formed by it and the 190-760-mmf padder will be too sharp. A 5.5-millihenry iron core r.f. choke (Bud CH-922W, or equivalent) should be used for L_1.

The AVC voltage is rectified by the 1N34 diode and applied through a decoupling network back into the BC-453 receiver at the lower end of L_9, the secondary of the interstage i.f. transformer which drives the second i.f. amplifier stage (V_6). The AVC voltage also is applied to one control grid of a 12AT7 twin triode in a vacuum tube voltmeter type S-meter circuit. An SPDT switch provides for full AVC voltage for higher "DX" S-meter readings, or lower AVC for "Local" S-meter readings from strong signals.

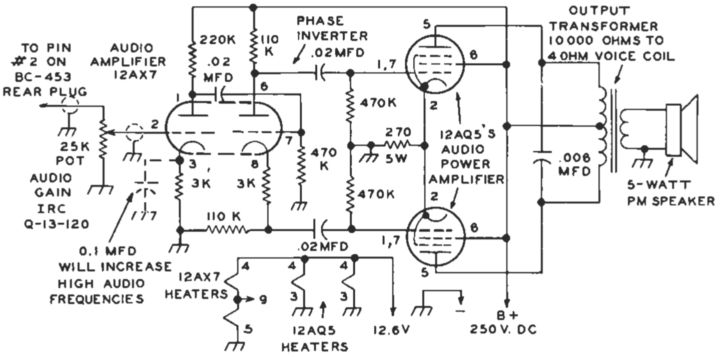

FIG. 1. SCHEMATIC DIAGRAM of a 5-watt audio amplifier for the BC-453 receiver. Audio output from the receiver is taken from the output transformer through pin 2 of the plug on the rear of the receiver chassis. Capacitances are in microfarads, and resistances are in ohms, ½-watt unless marked.

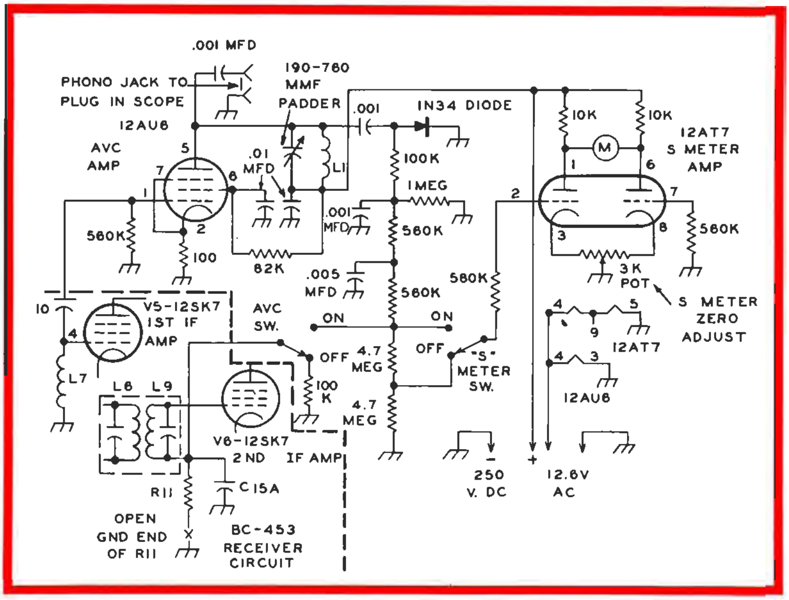

FIG. 2. FAST-ACTING AVC and S-meter circuit for the BC-453 receiver. Area inside dashed line at lower left corner of diagram shows points in the BC-453 circuit from which the i.f. signal is taken at pin 4 of the 12SK7 first i.f. amplifier; and connection to the lower end of L_9 into which AVC voltage from the AVC circuit is fed into the BC-453.

Note that a phono jack connection to the plate of the 12AU6 AVC amplifier provides a place to feed the i.f. signal to the vertical plates of an oscilloscope. By setting the horizontal sweep on the scope at 30 to 60 cycles, both incoming signals, and your own transmitter, may be checked for linearity.

The AVC/S-meter unit was constructed in a 4 x 2¾ x 2-inch Minibox (Bud CU-3015) and mounted on the left side of the BC-453. Extension shafts run from the controls to knobs, with the shafts supported on a small bracket. Exact arrangement of the AVC and S-meter circuit components will depend on the space available on each side of the BC-453 receiver in each mobile installation.

SIDEBAND SELECTOR SWITCH—

When properly aligned, the 85-kilocycle i.f. amplifier in the BC-453 has a bandwidth of about 2.5 kilocycles. This makes possible good SSB reception with considerable rejection of the unwanted sideband when the BFO signal is injected at either the upper or lower edge of the i.f. amplifier passband.

It is necessary only to install an SPST switch to add a 30-mmf capacitor across the BFO tuned circuit to change the frequency of the BFO so that it will provide the proper exalted carrier signal for reception of either upper or lower sideband signals. This addition, shown in the schematic diagram, Fig. 3, also includes increasing the plate voltage on the 12SR7 BFO tube by shunting R_{15} and R_{16} in the BC-453 with a 100,000-ohm, 1-watt resistor. This greatly increases the BFO injection for improved operation of the detector on SSB signals.

With the SPST switch open, adjust C_{28} in the BFO coil shield can so that upper sideband signals are properly received (BFO will be at upper edge of i.f. amplifier passband). Then, close the sideband selector switch and tune in a signal transmitting lower sideband, which also should sound normal.

When a station transmitting, say, lower sideband is properly tuned in, and the station shifts to upper sideband, the SPST switch should then be opened, and the BC-453 receiver dial be tuned 3 kilocycles higher in frequency to properly receive the upper sideband. A bit of practice in changing sidebands will allow this shift to be made in a matter of seconds.

The combination of the amateur band converters and BC-453 receiver modified as described herein is capable of providing excellent amateur radio mobile reception.

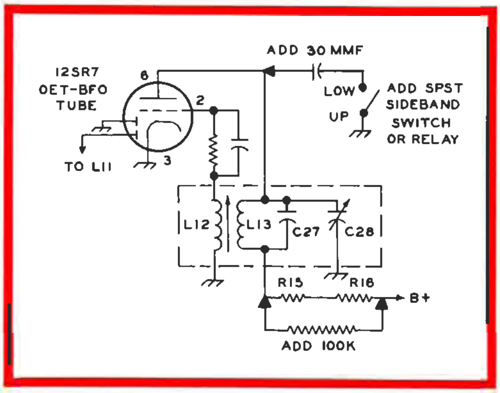

FIG. 3. SIDEBAND SELECTOR switch is added to BFO in BC-453 by adding a 30-mmf capacitor across BFO coil to shift BFO frequency. Locate switch and capacitor as close as possible to BFO tube to prevent radiation of signal from wiring.

1960 EDISON AWARD ANNOUNCED

NOMINATIONS for the 1960 Edison Radio Amateur Award are now open. All radio amateurs and others who know of a worthy public service which has been performed during 1960 by a duly licensed radio amateur while pursuing his hobby within the limits of the United States, are urged to nominate that person.

Simply state the candidate's name, call letters, full address, and a description of the service performed, in a letter to the Edison Award Council, General Electric Company, Electronic Components Division, Owensboro, Kentucky.

Full details of the Edison Award are given in the full-page announcement (at right) which appears in the October issues of amateur radio magazines. The award is sponsored annually by General Electric.

You will help increase the stature of *all* radio amateurs by naming a suitable candidate for the acclaim, distinctive Edison Award trophy, and $500 gift that the recipient is presented at a public ceremony in Washington, D.C.

Nominating letters must be postmarked not later than January 2, 1961. Compile the public service record during 1960 of your candidate *now* and mail it before the deadline approaches!

Nominations Open for 1960 Edison Award

RULES OF THE AWARD

GENERAL ELECTRIC

NOTE: The disclosure of any information or arrangements herein conveys no license under any patents of General Electric Company or others. In the absence of an express written agreement to the contrary, the General Electric Company assumes no liability for patent infringement (or any other liability) arising from the use of such information by others.

G-E HAM NEWS

SEPTEMBER-OCTOBER, 1960
VOL. 15 — NO. 5

BUILD-IT-YOURSELF IDEAS
from the 999 radio amateurs at
GENERAL ELECTRIC

Available FREE from your
G-E Tube Distributor

E. A. Neal, W4ITC — Editor

published bi-monthly by
RECEIVING TUBE DEPARTMENT
Owensboro, Ky.

HAM NEWS

NOVEMBER-DECEMBER, 1960

Also in this issue...

MOBILE LINEAR AMPLIFIER...SEE PAGE 3

KILOWATT MOBILE LINEAR AMPLIFIER installed in W8WFH's station wagon over the left rear wheel housing. Power supplies delivering 2,500 volts DC for the GL-4D21/4-125A amplifier tube plates, and 600 volts DC for the screen grids, are in the metal box under the floor. The metal box next to the amplifier contains a motor-driven, remote-tuned oscillator, hetrodyning and driver stages for the amplifier. The SSB generator, and audio and VOX circuits are under the front seat.

SCANNING the SPECTRUM

IN COMING ISSUES . . .

Starting with the January-February, 1961 issue, *G-E HAM NEWS* will be printed with a full 8½ x 11-inch page size, and continuing the standard 8 pages per issue. The larger page size will permit running schematic diagrams and other illustrations larger for greater clarity of detail. In addition, a standard 3-hole punch along the fold will be included, so that issues may be stored in a loose-leaf binder or notebook. Editorial space is increased more than 50 percent to bring our readers even more "How-to-do-it" ideas in each issue from the more than 999 radio amateurs in General Electric.

Here's a rundown of some of the key articles we've planned for coming issues:

JANUARY-FEBRUARY, 1961 — A combined audio preamplifier with built-in frequency response shaping and level limiting, called the "VOXI-MATIC" by W4PFQ of General Electric's Receiving Tube Department here in Owensboro;

MARCH-APRIL, 1961 — A compact, high-power, grounded-grid, linear amplifier using pentode tubes in the 60 to 150-watt plate dissipation class, for mobile or home-station operation, by W8DLD, co-author of the MOBILE RADIO SYSTEMS series described in this, and the past two issues;

MAY-JUNE, 1961 — A bandswitching hetrodyne type exciter for 3.5 to 30 megacycles, with power output options ranging from 20 to 100 watts, by W2FBS of G. E.'s Machinery Apparatus Operation in Schenectady, N. Y. The stable VFO for this exciter was described in the JULY-AUGUST, 1959 issue (Vol. 14, No. 4).

In addition to other interesting subjects later in the year, a new edition of our DX LOG is planned for the end of the year. The larger page size will permit a more complete listing of information on DX scores in the popular modes of transmission.

If your local G-E Tube distributor does not now receive a supply of *G-E HAM NEWS*, ask him to order copies from me. Or, if his supply runs out quickly, ask him to order more copies, so that *all* radio amateurs in your locality will have our publication.

AIDS FOR AMATEURS . . .

We often run across handy operating aids and gadgets of interest to radio amateurs and call attention to them in this column. Here are some of the latest items:

Global Time Conversion Simplifier — a chart which unfolds to 17 x 22 inches in size, which will help radio amateurs establish the correct local time at almost any specific point on earth. It contains an easy-to-use charting of complete global time information, and even has a listing of time data for major cities in the United States — even our home QTH of Owensboro, Ky. Look for it at electronic parts distributors which handle John F. Rider publications.

New Call-Letter Sign — a 2½ x 7-inch call-letter sign, with letters permanently embossed in sheet aluminum, can be mounted on the rig, car, bicycle, ham shack door, etc. Finished in baked enamel, the call letters are reflectorized with glass beads for good nighttime visibility. A postal card to Redicraft Products, Box 1244, Studio City, Calif., will bring you details.

Call-D-Cal—a handsome decal in six colors with call letters and home state will adhere to any smooth surface, including glass. Excellent for identifying your mobile station, this 4 x 8½ decal may be ordered individually, or ten or more at special club rates. Obtain details from Call-D-Cal, P.O. Box 3915, Terminal Annex, Los Angeles 54, Calif.

Call-Letter Jewelry — one of the many items personalized for radio amateurs; others include ties, plates, tie clasps, lapel pins, ash trays, pencil caddies, etc., all with call letters on them. Complete catalog listing may be obtained from K9TVA, 6429 North Glenwood Avenue, Chicago 26, Ill.

ARRL ANTENNA BOOK — A completely revsied Ninth Edition of the famous ARRL Antenna Book has recently been announced. Expanded to 320 pages, the book presents the latest trends and practices in amateur radio antenna design and construction problems which often cannot be solved simply with manufactured equipment. The book is available from electronic parts distributors, or directly from ARRL.

EMERGENCY POWER SOURCE . . .

The 3-phase AC alternator system described in the July-August, 1960 issue is a good source of emergency power, according to W8DLD. As long as the load on the alternator is closely balanced, a kilowatt of power is available for lighting, running appliances, and even AC-powered communication equipment in an emergency. For the latter application, it is best to hold the engine speed below 1,000 r.p.m. so that the alternator frequency does not go above 200 cycles. Transformers in some equipment designed for 60-cycle operation may not operate efficiently on frequencies above this.

73 until our first "King-Size" issue,

—*Lighthouse Larry*

MOBILE LINEAR AMPLIFIER

By W. C. Lauden, W8WFH

STABILITY AND RELIABILITY are of prime importance in mobile radio equipment. This well-shielded linear amplifier meets these requirements and has components rated for a full kilowatt DC input in class AB_1 or AB_2 operation. It is also well-suited for home-station installations.

The high power sensitivity of modern tetrode and beam pentode transmitting tubes simplifies the construction of an amateur transmitter since they require only low driving power, and thus, a simple exciter. Two GL-4D21/4-125A tetrodes were connected in parallel in this amplifier in a tuned-grid, tuned-plate circuit, as shown in the schematic diagram, Fig. 1.

COMMERCIALLY MADE GRID AND PLATE tank circuits, as specified in TABLE I — PARTS LIST, were found to have the correct inductances for the grid and plate circuits over the range of 3.5 to 30 megacycles. The plate pi-network loading capacitor C_4, is a standard 3-gang broadcast type variable.

(continued on page 4)

TABLE I — PARTS LIST MOBILE LINEAR AMPLIFIER

C_1.....10 — 200-mmf variable (Part of Harrington GP-50 tuned circuit).

C_2.....1-11-mmf neutralizing capacitor.

C_3.....15-250-mmf variable, 3,000 volt spacing.

C_4.....30 — 1140-mmf variable (3-section broadcast receiver capacitor with 10 — 380-mmf per section).

J_1, J_2 ....chassis coaxial cable connectors.

L_1......grid coil assembly (part of GP-50).

L_2......10-microhenry coil with taps and switch S_2 (Barker & Williamson Model 851 pi-network tank circuit).

L_3, L_4, L_5, L_6, L_7.parasitic suppressor chokes made from 6 turns of No. 16 enameled wire on 2 watt, 47-ohm composition resistors.

M_1....0 — 50-milliampere DC milliameter (G.E. Model DW-91, or equivalent).

R_1, R_2....0.667 ohms, 2 watts; resistance wire wound on 2-watt resistors.

RFC_1, RFC_3........2.5-milihenry, 4 pi r.f. choke, 125-milliampere rating.

RFC_2..200-microhenry solenoid wound r.f. choke (National R-175A, or Barker & Williamson No. 800).

S_1.....2-pole, 5-position ceramic rotary tap switch (Part of GP-50).

S_2.....1 pole, 5-position tap switch (Part of B & W 851 coil).

S_3.....2-pole, 5-position rotary tap switch.

T_1, T_2 ....5-volt, 6.5-ampere filament transformers, 12 or 115-volt primaries.

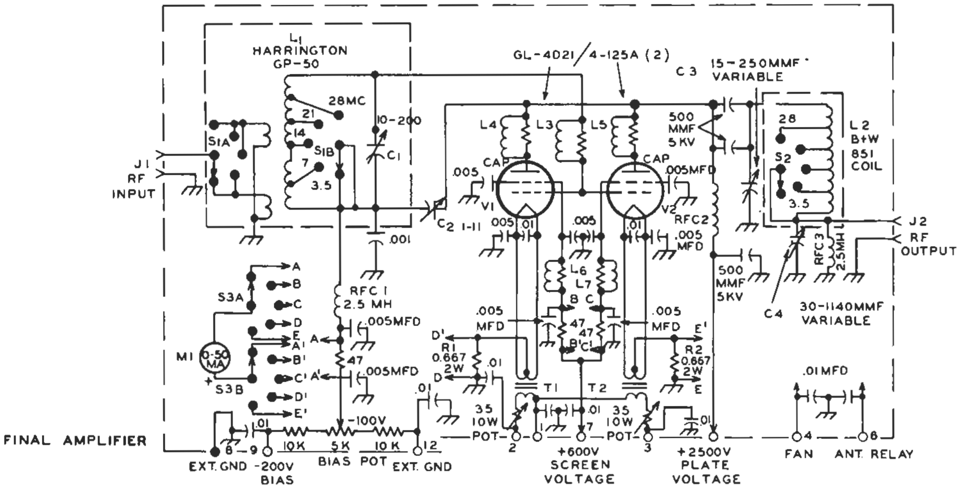

FIG. 1. SCHEMATIC DIAGRAM of the GL-4D21/4-125-A mobile linear amplifier. The 0.001, 0.005 and 0.01-mfd capacitances shown as bypasses in various circuits are disc ceramic capacitors, with DC voltage ratings at least double the operating voltage of each circuit. Resistances are in ohms, ½ watt rating unless otherwise specified. Components C_1 L_1 and S_1 are included in the Harrington GP-50 grid tank circuit; L_2 and S_2 are included in the B & W 851 pi-network plate tank circuit.

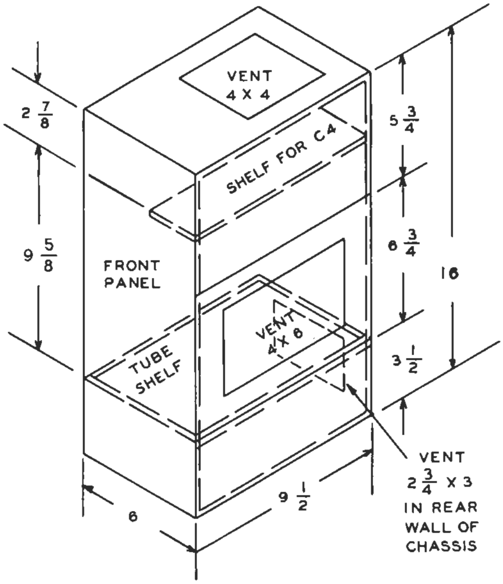

FIG. 2. CABINET DRAWING for the mobile linear amplifier. This cabinet was fabricated from $\frac{1}{16}$-inch thick sheet aluminum, with flanges for side shields.

(continued from page 3)

Capacitive bridge neutralization was included in the circuit to ensure stabilty on all bands. Ths bridge is formed by the tube capacitances, plus C_2 and the 0.001-mfd capacitor from C_1 to ground.

Separate current metering was provided for the screen grid and cathode circuits of each tube to check on the balance of power between them. A 0 to 50-milliampere DC current meter is switched across resistors in the control grid (A) and screen grid (B & C) metering positions of S_3. In the cathode circuits (D & E), 0.667-ohm shunts multiply the meter reading by 4 times for a full scale reading of 200 milliamperes in each circuit. If the separate metering of cathode currents is not necessary, a single filament transformer may be used.

If GL-4-250A/5D22 or GL-4-400A tetrodes are used in this amplifier, larger filament transformers are needed. Also, if these tubes will be operated near maximum power, a heavier plate tank coil, the B & W Model 850A, which requires more space, should be substituted for the Model 851 coil. Type GL-813 pentodes also may be used in this amplifier by installing the proper sockets and filament transformers.

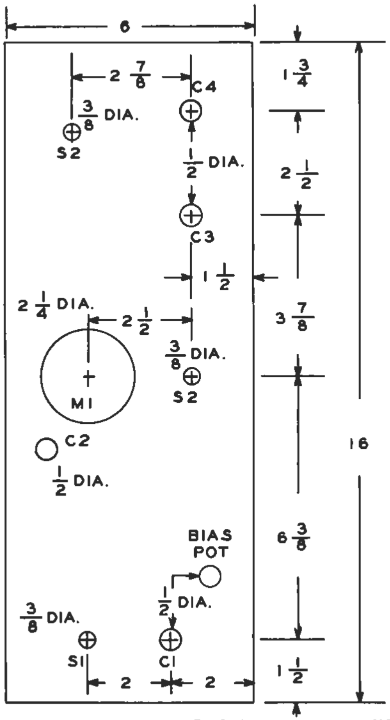

FIG. 3. PANEL LAYOUT DIAGRAM for the amplifier. Only major hole locations are shown. Locations of small holes for hardware should be located from the part being mounted. Cut meter hole to a diameter slightly larger than case of meter.

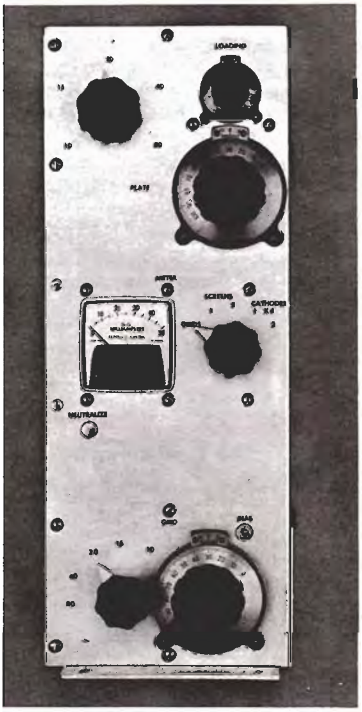

PANEL VIEW of the linear amplifier. Note that grid and plate bandswitches have separate knobs, and are not ganged. Snap-in buttons cover the holes through which the neutralizing capacitor (C_2) and bias potentiometer are adjusted.

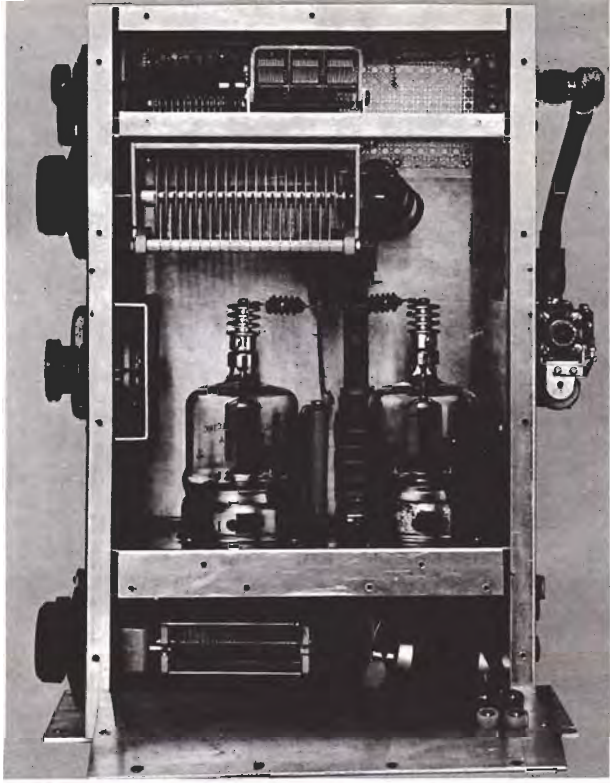

SIDE VIEW of the amplifier. A "U" shaped bracket (Bud CB-1628 miniature chassis) behind the panel shields the meter (M_1) and meter switch (S_2) from strong r.f. field present around the plate tank circuit.

THE SHIELDED ENCLOSURE for the amplifier, shown in Fig 2, was fabricated from $\frac{1}{16}$-inch thick sheet aluminum. All sides were made as separate pieces with flanges on them for assembly to adjacent pieces with machine screws and nuts, or self-tapping screws. The shelves and vent holes should be added before holes are cut for mounting the components. Vent holes may be covered with aluminum screening or perforated sheet.

The front panel layout, Fig. 3, and the sub-chassis shelf layout, Fig. 4, are correct for the components specified in the PARTS LIST. Holes should be relocated to suit other brands of components as necessary. Locations for small parts can be determined from the pictures.

Although no commercially made enclosure of similar dimensions is available, a 6 x 10 x 3-inch aluminum chassis or Minibox (**Bud** CU-3010) could be used as a chassis base and fitted with the 6 x 16-inch front panel. A frame of aluminum angle covered with perforated sheet aluminum would make a good r.f. shield and support the upper shelf.

COMPONENT SUBSTITUTIONS may be made, as long as their electrical and mechanical characteristics are similar. The neutralizing capacitor, C_2, may be a **Bud** NC-853, **Millen** 15011, or **Johnson** 159-125. Or, a suitable capacitor may be made by mounting two aluminum plates about 1 x 4 inches spaced about ½ inch apart on standoff insulators.

The upper shelf may be dropped about an inch if necessary to allow room for a larger B & W Model 850A plate tank circuit which should be used with the larger tubes. The vernier tuning dials for the grid and plate circuits are Lafayette type F-346, 3 inches in diameter. National type AM dials also are suitable.

Power wiring was run with insulated wire of sufficient size to carry the voltages and currents in the various circuits. Leads carrying the grid and plate r.f. currents should be of $\frac{1}{32}$ x ½-inch copper strip. In the plate tank circuit, use joints fastened with brass machine screws instead of solder when possible.

The fan shown is simply a small 12-volt DC motor with a fan blade. It pulls cool air into the chassis through the 2¾ x 3-inch vent in the chassis, forces it up through the holes in the tube sockets, and out through the upper vents in the box.

The antenna changeover relay was mounted on the outside of the cabinet where it would be easily accessible. Power for the

(continued on page 6)

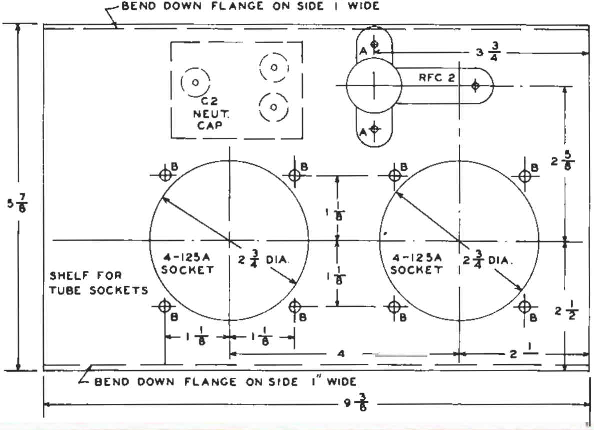

FIG. 4. SUB-CHASSIS LAYOUT diagram. Socket hole diameter (2¾ inches) is for Johnson 122-275-1 sockets, and may be different for other brands of giant 5-pin wafer sockets designed for GL-4D21/4-125-A and similar tubes. Socket hole spacing is sufficient to permit using the higher plate dissipation GL-4-250A/5D22 and GL-4-400A tetrodes in the amplifier if desired.

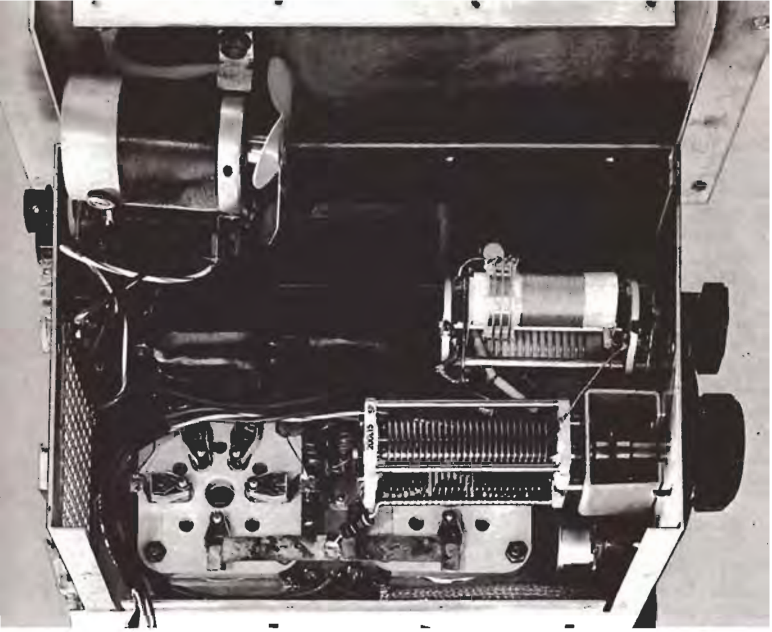

BOTTOM VIEW of the linear amplifier. Note 3/8-inch wide copper strip connection between the control grid terminals on the tube sockets. Fon under the chassis forces air up through holes in the tube sockets, due to tight construction of lower part of box. Air cools seals in bases of tubes, then passes out through holes in bases and up along glass envelopes.

BIBLIOGRAPHY OF INFORMATION ON LINEAR AMPLIFIER TESTING

"Adjustment of Class B Linear Amplifiers," *RADIO HANDBOOK*, 14th Edition, by Editors and Engineers, page 278.

"Two Tone Tests and Their Meaning," by Don Stoner, W6TNS, *NEW SIDEBAND HANDBOOK*, page 151.

'How to Test and Align a Linear Amplifier," by Robert W. Ehrlich, W0JSM, *SINGLE SIDEBAND FOR THE RADIO AMATEUR*, page 134; also in QST, May, 1952, page 39; and the RADIO AMATEUR'S HANDBOOK, page 314.

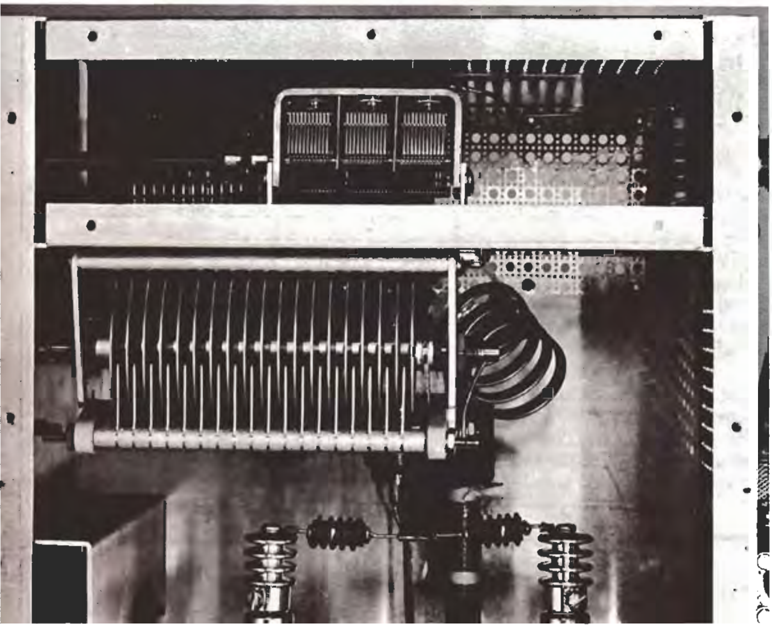

PLATE TANK CIRCUIT of the linear amplifier. Plate tuning capacitor, C_3, is suspended from shelf, with pi-network loading capacitor C_4 mounted on shelf. The 28-megacycle coil was removed from the B & W Model 851 pi-network tank circuit frame and mounted between C_3 and the other section of coil. L_2 is mounted upside down from the top of the cabinet.

(continued from page 5)

relay coil was brought into the amplifier through the 12-pin plug (Jones P-312-AB) along with the other low and medium voltage circuits. Bypass capacitors were connected to each pin on this plug, as well as used liberally throughout the amplifier, to keep r.f. currents off the power wiring.

INITIAL TESTING should preferably be done in a home station where checks and adjustments can be made more easily than in a vehicle. The test setup should preferably have a dummy antenna load, and have provision for reducing and turning off plate and screen voltages. First apply filament power, bias voltage and r.f. excitation to the amplifier so that the neutralizing adjustment can be made. About 5 watts of r.f. excitation at 14 megacycles or higher is necessary. This will give a grid current reading of 10 to 15 milliamperes.

Set S_3 in position "A" and tune the grid circuit for maximum current, making sure that the grid and plate bandswitches are in the proper position. Then, with loading capacitor C_4 near maximum capacitance, "rock" the plate tuning capacitor, C_3, back and forth, watching for a quick fluctuation in grid current at one point on the dial for C_3. Adjust the neutralizing capacitor, C_2, until the grid current is constant.

FINAL CALL— 1960 EDISON RADIO AMATEUR AWARD

January 2, 1961, is Deadline for Nominations

Emergency communications, community service, relaying messages, civil defense organizational work, helping disabled persons, amateurs and others with specialized problems; these are typical activities that qualify United States radio amateurs for the Edison Radio Amateur Award. Full details are available on request.

Only candidates whose names are submitted by letter can be considered by the Award judges, there is no other source for nominations. Help bring national recognition to a worthy amateur, and the hobby of amateur radio. Send in your nominating letter promptly to Edison Award Committee, General Electric Company, Electronic Components Division, Owensboro, Kentucky.

As a final check for neutralization, remove the r.f. drive, apply about half of normal plate and screen voltages, and reduce the grid bias so that the plate current increases to near maximum plate dissipation for the tubes used. Rotate both the grid and plate tuning capacitors to see if the amplifier will break into oscillation at any combination of settings. This test should be tried on all bands. If an oscillation is noticed, readjust C_2 slightly until the oscillation disappears.

After turning off power, connect the amplifier to a suitable dummy antenna load having a 50-ohm impedance and power capability of at least 500 watts. Insert a standing wave ratio bridge in the coaxial cable between the amplifier and dummy antenna. Apply r.f. drive, and about half of normal plate and screen voltages, and tune the amplifier for maximum output.

If the amplifier appears to function normally, apply full plate and screen voltages. Adjust C_4 so that each tube draws about 150 milliamperes plate current (for GL-4D21/4-125A tubes). Check to see if maximum power output on the SWR indicator occurs at the same setting of C_3 as the minimum plate current dip. Any major differences in plate or screen currents drawn by each tube indicates that one tube may be better.

Preferably, a SSB exciter should be used to drive the amplifier, so that linearity tests can be run on the amplifier before installation in the vehicle. If excess driving power is available from the exciter, a 5,000-ohm, 25-watt non-inductive resistor (Sprague 25NIT-5000 or equivalent) can be connected across C_1 to swamp the excess drive. Complete descriptions of linearity tests are given in the amateur radio handbooks, as listed in the bibliography on page 6.

INSTALLATION IN THE VEHICLE is simply a matter of mounting the amplifier securely so that it will not shake or vibrate excessively while the vehicle is in motion. Connect each filament transformer primary across a different phase of the 3-phase AC power source in the vehicle. Heater power for the exciter should be obtained from the third phase to balance the heater load.

In W8WFH's installation, bias voltage is obtained from a small 200-volt negative single-phase AC supply, while 600 volts for the GL-4D21/4-125A screen grids is delivered by a 300/600-volt 3-phase star bridge rectifier supply which also powers the exciter from the 300-volt tap (Fig. 9 on page 7 of the July-August, 1960 issue). A 2500-volt 3-phase plate supply is used, but plate voltages up to 3000 are suitable.

W8WFH does not recommend regulating the bias and screen grid voltages for the amplifier. Plate voltage may fluctuate more than 10 percent due to variations in the alternator output voltage with engine speed — from 100 volts at idle, to 120 volts at road speeds — and plate current peaks during modulation. By allowing the bias and screen grid voltages to fluctuate in accordance with the plate voltage, a fairly *constant ratio* is maintained among these three voltages, and amplifier linearity is improved.

A husky mobile antenna is required for this amplifier. W8DLD and W8WFH have constructed their own antennas with separate center-loading coils for each band. Details will be published in a forthcoming issue. Check with the manufacturer of the mobile antenna you may be considering, to ensure that it will withstand the several hundred watts of power output delivered by this amplifier.

If you want real performance in your mobile amateur radio installation, follow the proven recommendations published in this 3-part series in *G-E HAM NEWS*.

TRIPLE TRIODE COMPACTRON DEVICES ANNOUNCED

New 6C10 and 6D10 feature separate element connections via 12-pin base

TWO TRIPLE TRIODES are the first types to be registered in General Electric's new line of "Compactron" multi-function devices. Only 1½ inches in seated height (see view at right), these devices feature separate connections to all elements via a new 12-pin base. Previous triple triodes with 9-pin miniature bases (6EZ8 and 6GY8) each had combined element connections to some pins.

One type, the 6C10, contains three triode sections, each with characteristics similar to a section in the 12AX7 high-mu twin triode. The 6D10 has sections similar to the 6AB4 single, and 12AT7 medium-mu twin triodes. This permits the 6C10 and 6D10 to be used in present circuits without redesign, and where three separate triode functions are required. Both tubes have 6.3-volt heaters.

In addition to the usual applications in resistance coupled amplifiers, phase inverters, automatic frequency control service, and combined mixer-oscillator-grounded grid r.f. amplifiers in FM receivers, the following typical amateur radio circuits may be combined in a single triple triode "Compactron" device: VHF Converter — grounded-grid r.f. amplifier, mixer and oscillator; Product Detector — circuit requiring three triodes; Twin Triode Product Detector and AVC Amplifier. VHF Exciters — crystal oscillator, first and second frequency multipliers, and Cascode r.f. Amplifier and Triode Mixer.

These are just a few of the many multi-function ideas possible with these and other new "Compactron" devices.

BASING DIAGRAM — EIA 12BQ

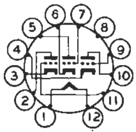

TERMINAL CONNECTIONS

Pin 1 — Heater
Pin 2 — Plate (Section 3)
Pin 3 — Cathode (Section 3)
Pin 4 — Cathode (Section 1)
Pin 5 — Plate (Section 2)
Pin 6 — Cathode (Section 2)
Pin 7 — Grid (Section 2)
Pin 8 — Internal Connection
Pin 9 — Grid (Section 1)
Pin 10 — Plate (Section 1)
Pin 11 — Grid (Section 3)
Pin 12 — Heater

HAM NEWS

NOVEMBER-DECEMBER, 1960
VOL. 15 — NO. 6

HOW-TO-DO-IT IDEAS
from the 999 radio amateurs at
GENERAL ELECTRIC

Available FREE from your
G-E Tube Distributor

E. A. Neal, W4ITC — Editor

published bi-monthly by
RECEIVING TUBE DEPARTMENT
Owensboro, Ky.

TUBES

HAM NEWS

JANUARY-FEBRUARY, 1961

THE OMNIVOX

THE OMNIVOX is a feature packed simple, flexible audio preamp/vox/transmitter control and phone patch unit. Integrated into this design project are the following author's dozen features:

1. 6BN6 gated beam VOX tube for positive anti-trip.
2. Automatic Level Control (ALC) of audio amplifier for uniform modulation from microphone and telephone inputs.
3. Hybrid phone patch with 6AL7-GT twin indicator tube to monitor voltage into line and ALC operation.
4. Individual phone and master gain controls.
5. Adjustable VOX Sensitivity, anti-trip and holding time controls.
6. Manual or automatic VOX control.
7. Shaped audio band-pass from 250-3000 cps.
8. Visual indication of ALC bus voltage.
9. Visual indication of "zero-beat" for on-the-nose net operation.
10. Peak compression circuit.
11. Zero audio output until control relay operates.
12. Speaker output attenuated automatically in "Patch On" position.
13. Auxiliary audio output position (with attenuated speaker output) for recorder or oscilloscope.

(continued on page 2)

W4PFQ MONITORS PHONE PATCH being handled through the OMNIVOX (just below receiver) installed in his station. Operating console also includes transmitter exciter (next to receiver), and — on lower level — speaker, power control panel (center) and audio system for transmitter. Large cabinet at left houses a final amplifier with pair of GL-813's, plate modulator and power supplies. W4PFQ operates principally on double sideband.

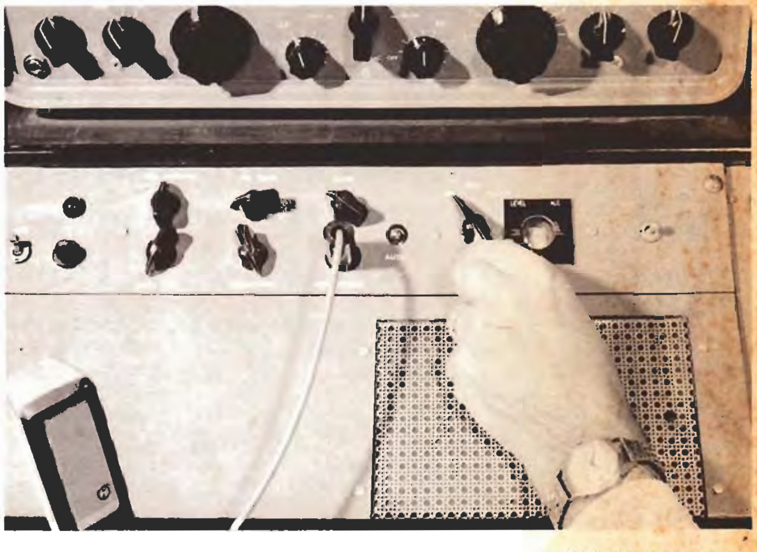

CLOSE-UP VIEW of the OMNIVOX centered on a 3½ x 19-inch rack panel. Switch, fuse and pilot light at left control external power supply for the OMNIVOX.

IN THIS ISSUE

OMNIVOX (continued from page 1)

A block diagram of this system is shown in Fig. 1. Only four tubes are needed in the functional amplifier and control stages. In addition, a 6AL7-GT twin indicator tube provides constant monitoring of the signal applied to the telephone line when using the phone patch. The indicator tube provides a sensitive means for determining optimum balance of the hybrid circuit, gives a visual indication of "zero-beat" and furnishes an indication of the amount of ALC voltage developed.

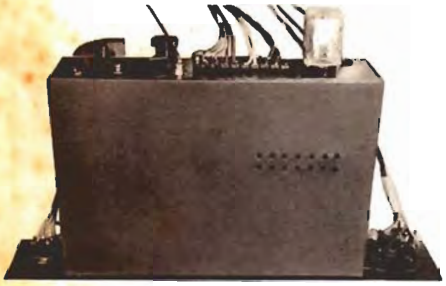

TOP VIEW of the OMNIVOX model with chassis cover in place. Vent holes in cover and chassis deck provide air circulation around tubes.

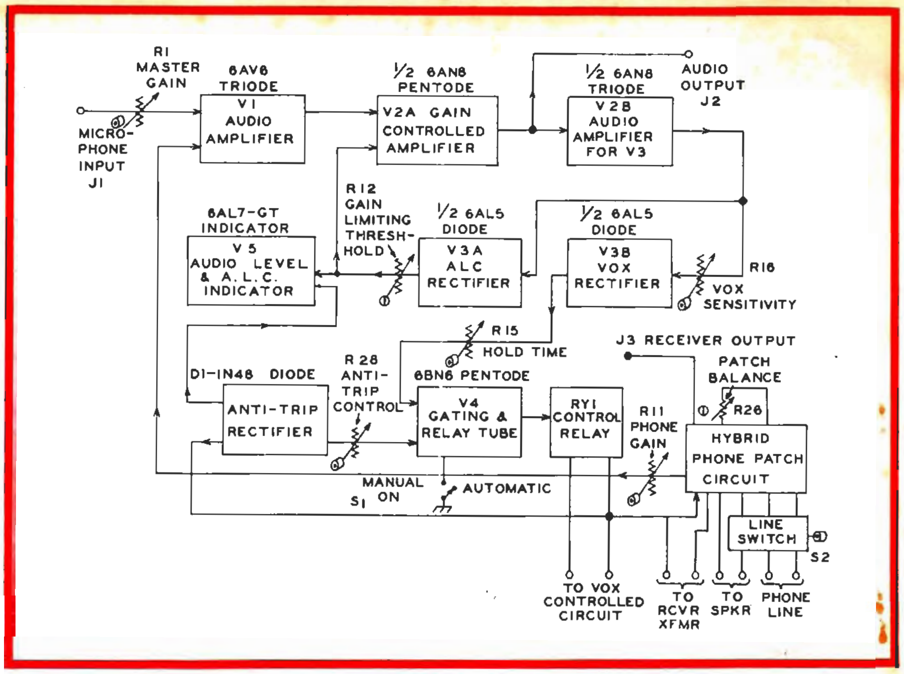

FIG. 1. **BLOCK DIAGRAM** of the OMNIVOX circuit, showing audio amplifier at top, bias rectifier and indicator tube at center, VOX circuit at bottom and hybrid phone patch at lower right corner. All controls except **Gain Limiting Threshold** (R_{12}), **Calibrate** (R_{33}) and **Patch Balance** (R_{26}) are on the front panel.

The gain of the audio system is about 70 decibels, providing adequate amplification from a crystal or other high impedance low level microphone to yield 22 volts at the audio output terminals when no ALC voltage is developed.

The input amplifier in the schematic diagram, Fig. 2, is driven through the master gain control (R_1) which provides the load for the crystal microphone. It also acts with R_2 and R_{11} as a voltage divider to control the amount of telephone signal fed to V_1.

Preamplifier V_1 drives the pentode section of a 6AN8 (V_{2A}), connected as a gain controlled audio amplifier. Inter-stage coupling capacitors C_2 and C_3 provide low frequency attenuation. Circuit and tube capacitances coupled with C_8 provide high frequency attenuation, resulting in the audio frequency response characteristic shown in Fig. 3.

The output circuit of V_{2A} is composed of R_7, C_7, C_8, R_9 and R_{10} in series with the load connected to the output jack (J_2) and the input impedance of V_{2B} connected through R_{20}. When the OMNIVOX is in the "receive" (R_{Y1} not energized) condition, the audio output jack (J_2) is grounded through one of the normally closed contacts of R_{Y1}.

Thus, no audio output can appear at J_2 from the speaker feeding into the microphone, even though both audio stages may be operating at full gain. The paralleled resistance of R_9 and R_{10} is 50,000 ohms, and this, in shunt with R_7, provides a load resistance of 33,000 ohms for V_{2A}. The audio voltage developed across this load resistance is coupled to V_{2B} to provide additional gain for the rectifier circuits of V_3 which provide a positive voltage from V_{3A} for driving the gating tube (V_4), and a negative voltage from V_{3B} for the ALC bias on V_{2A}.

In addition, should the positive going output of V_{2A} exceed the 7.5 volts developed by R_{21} and C_{14} in the cathode circuit of V_{2B}, the 47,000-ohm resistance of R_{20} is shunted across the plate load to reduce the peak gain and provide moderate limiting action. Should greater clipping be desired, R_{20} can be reduced. The peak voltage at which clipping begins can be adjusted by changing the value of R_{21} to develop more or less DC voltage. (It is recommended that R_{21} be no less than 600 ohms.)

THE OUTPUT OF V_{2B} is coupled through C_{13} to V_{3A} where it is rectified and filtered through C_{10}, R_{21}, R_{37} and C_4 to provide a negative voltage proportional to the amplitude of the

HAM NEWS
TUBES

presents **HOW-TO-DO-IT IDEAS**
from the 999 radio amateurs at
GENERAL ELECTRIC

A bi-monthly publication of the RECEIVING TUBE DEPARTMENT
Owensboro, Kentucky, U. S. A. • Editor — E. A. Neal, W4ITC

G-E HAM NEWS is available free from authorized **G-E Tube** distributors. Some distributors mail copies locally to their customers.

A low-cost direct-mail subscription plan is available to persons residing in the United States and its possessions (including APO and FPO numbers).

Subscription rates are:

One Year (6 issues)	$1.00
Two Years (12 issues)	$2.00
Three Years (18 issues)	$3.00
Five Years (30 issues)	$4.00

Enclose check or money order for U. S. currency for the proper amount above made payable to "General Electric Company."

Residents of Canada may subscribe to G-E HAM NEWS for $1.00 per year from the Canadian General Electric Company, Ltd., Electronic Tube Marketing Section, 189 Dufferin Street, Toronto 3, Ontario, Canada. Enclose check or money order made payable to: "Canadian General Electric Company, Ltd."

Distribution of G-E HAM NEWS in more than 40 foreign countries is handled through the International General Electric Company. A listing of outlets is available from the G-E HAM NEWS office. Or, write to: Customer Inquiry Section, International General Electric Company, 150 East 42nd Street, 7th Floor, New York 17, New York, U. S. A.

NOTE: The disclosure of any information or arrangements herein conveys no license under any patents of General Electric Company or others. In the absence of an express written agreement to the contrary, the General Electric Company assumes no liability for patent infringement (or any other liability) arising from the use of such information by others.

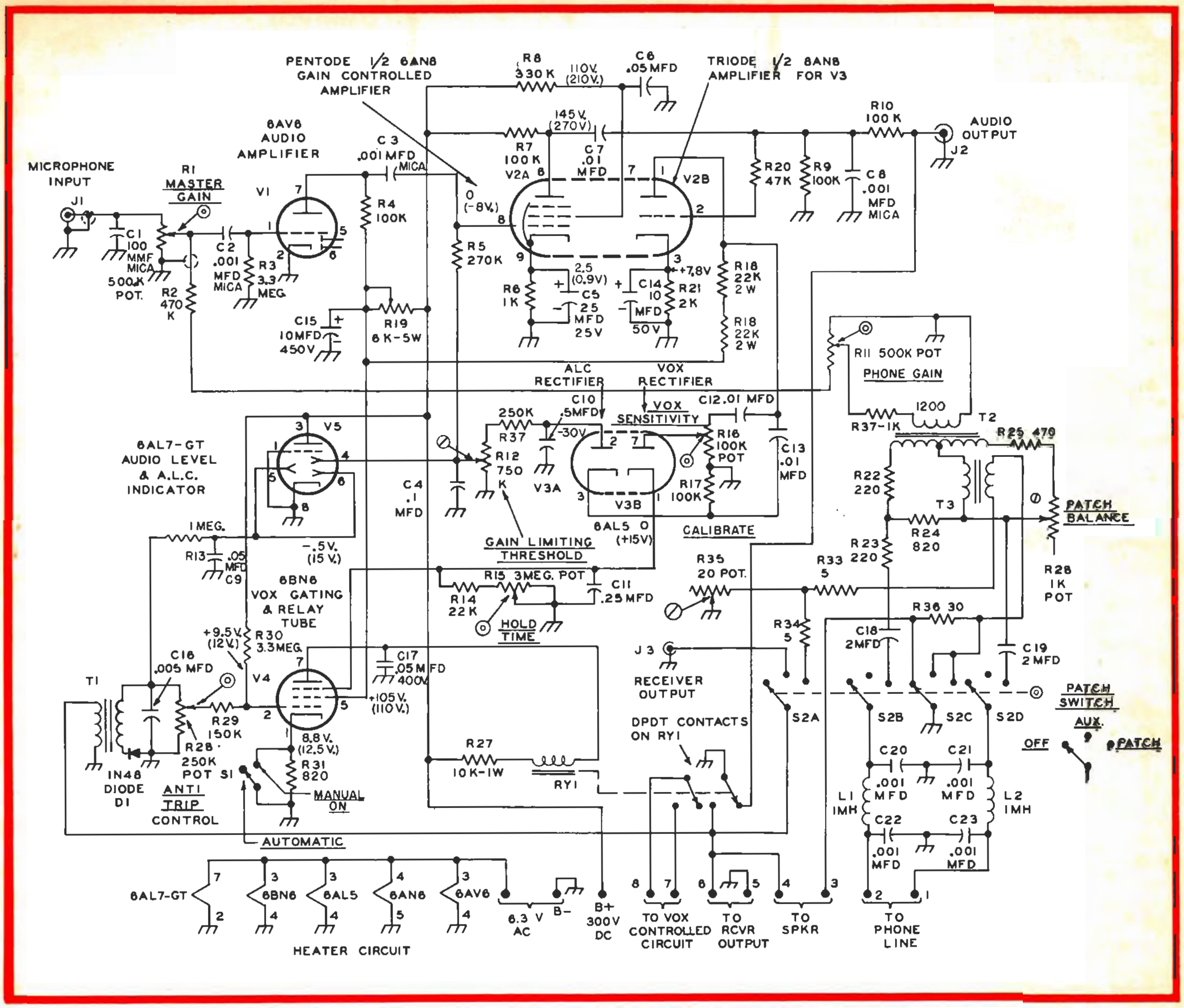

FIG. 2. COMPLETE SCHEMATIC DIAGRAM of the OMNIVOX. Only those parts which require additional identification are shown in TABLE I — PARTS LIST. Resistances are in ohms, ½ watt rating and ± 10 percent tolerance, unless otherwise marked. Capacitances are in microfarads (mfd), paper types of 600-volt DC rating, except where noted. Base pins of tube diagrams are numbered.

audio output. When this voltage is fed back through R_5 to the grid of V_{2A}, the operating point of this tube is shifted to reduce the gain of the stage. By adjusting the *Gain Limiting Threshold* control, the amount of audio limiting can be varied over a wide range.

The circuit is fast acting and has a control range of more than 20 decibels with a normal threshold setting about ⅓ open, as shown in Fig. 4. The control voltage is monitored by one section of V_5 and provides a relative indication of the output voltage from V_{2A}. Rectifier V_{3B} is driven from amplifier V_{2B} through C_{12} and the VOX *Sensitivity* control (R_{16}). The DC output of this circuit is developed across R_{14} and R_{15} and charges C_{11} to provide a positive gating voltage for control tube (V_4).

Output from the receiver is applied to the primary of T_1 (a

(continued on page 4)

TABLE I — PARTS LIST—OMNIVOX

C_5.....25 mfd, 25-volt electrolytic.
C_{14}....10 mfd, 25-volt electrolytic.
C_{15}....10 mfd, 450-volt electrolytic.
J_1......Chassis type microphone jack.
J_2, J_3....Chassis type 1-pin phono jacks, or phone jacks.
L_1, L_2....1-mh pi-wound r.f. chokes.
R_1, R_{11}....500,000-ohm potentiometer, linear taper.
R_{15}....3-Megohm potentiometer, linear taper.
R_{16}....100,000-ohm potentiometer, linear taper.
R_{19}....6,000-ohm, 5-watt adjustable wire wound resistor.
R_{20}....1,000-ohm potentiometer, linear taper.
R_{28}....250,000-ohm potentiometer, linear taper.
R_{35}....20-ohm wire wound potentiometer.
R_{Y1}....DPDT relay, 5,000-ohm 8 ma coil, 8-pin octal plug-in base (Potter-Brumfield KCP-11-5000 DC)
S_1.....SPST toggle switch.
S_2.....4-pole, 3-position rotary tap switch.
T_1.....4-watt universal audio output transformer, 10,000-ohm primary to 3.2-ohm secondary.
T_2.....matching transformer, 1200-ohm primary, 600-ohm secondary with precision electrical center tap.[1]
T_3.....matching transformer, 500-ohm primary, 4-ohm secondary.

[1] Transformer T_2 in the author's model was obtained from a Signal Corps RM-52 Remote Control Unit, part of field telephone equipment which is available from several war surplus electronics distributors. T_2 is labeled "UTC 83718-C-280A."

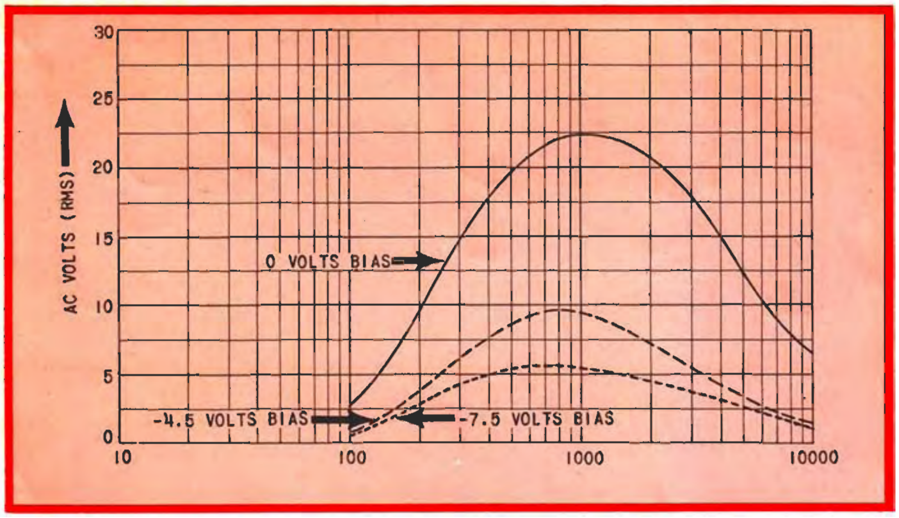

FIG. 3. AUDIO FREQUENCY response characteristic of the preamplifier. Curves show change in output level at constant input level with different values of ALC bias. When converted to decibel scale and normalized, all three curves nearly coincide. This indicates that the bandpass remains constant over wide gain variations.

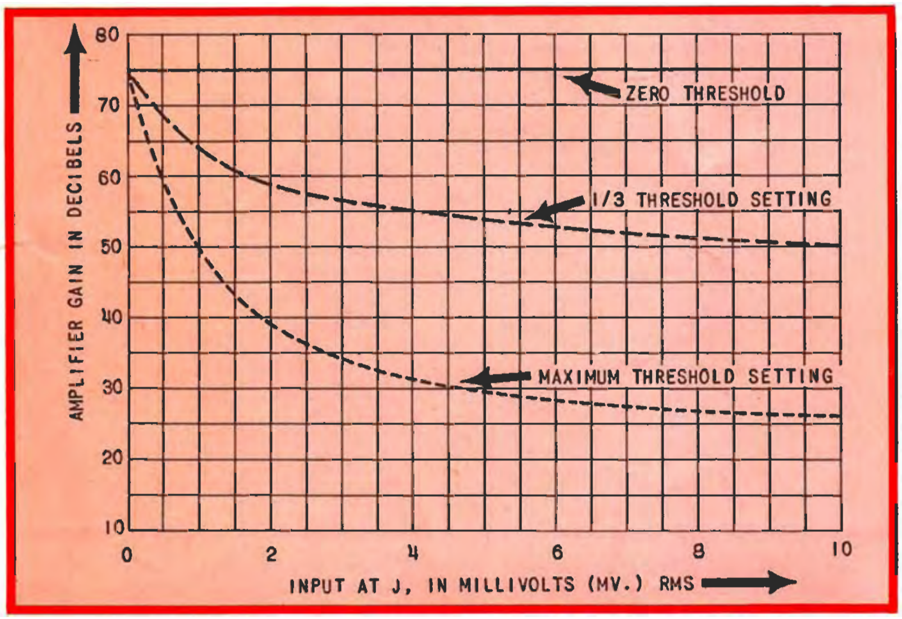

FIG. 4. GRAPH SHOWING range of control provided by ALC system over range of zero threshold voltage, to full threshold voltage.

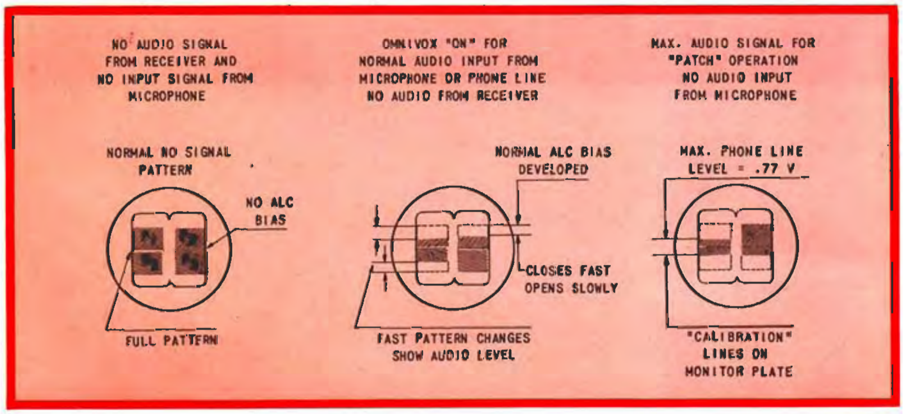

FIG. 5. PATTERN SHOWN on 6AL7-GT indicator tube (V_5) with (left) no audio signal; (middle) audio signal compressed normal amount, with left hand pattern changing at syllabic rate, and right hand pattern changing at slow rate with variations in ALC bias. Maximum phone line level of 0.77 volt is shown in pattern view at right.

OMNIVOX

(continued from page 3)

small output transformer operated backwards), where it is stepped up and rectified by a 1N48 diode.(D_1). The voltage developed across C_{16} and R_{23} provides negative going pulses of voltage which are superimposed on the positive DC voltage on the No. 1 grid of V_4 by adjusting the *Anti-Trip* control (R_{25}). An additional RC filter (R_{13} and C_9) provides a DC voltage to the deflection electrodes of V_5 which is proportional to the peak audio voltage delivered by the station receiver to the OMNIVOX. Thus the pattern of three sections of V_5 compresses as more audio voltage is fed from the receiver, as shown in Fig. 5.

HEART OF THE CONTROL SECTION of OMNIVOX is the 6BN6 gated beam tube (V_4). This tube is constructed in such a way that its plate receives current only when *both* of the grids are cut on. Thus an anti-trip voltage at the No. 1 grid can cut off the beam and, regardless of the amount of positive voltage on the second control grid, the plate cannot draw current. By this means, anti-trip action is not a matter of delicate balance between opposing voltages.

The 6BN6 (V_4) operates with nearly constant cathode current, developing 9.5 volts across R_{31}, and providing cut-off voltage for the second control grid. The first grid is connected to a voltage divider made up of R_{30}, R_{29} and R_{25} from plus 300 volts to ground, and is clamped at zero bias. Thus, in the absence of anti-trip voltage derived from receiver output, the input gate is open.

Since the second grid is cut off, no plate current flows until audio voltage applied to V_{3B} develops a positive gating bias at the 6BN6's second grid. This starts plate current flow in the 6BN6, causing R_{Y1} to close. Its DPDT contacts unground the audio output signal from V_{2A}, mute the speaker and close the external VOX control circuit on terminals 7 and 8.

The gating bias remains on the second control grid of V_4 as long as there is sufficient positive voltage across C_{11}. The *HOLD* control (R_{15}) adjusts the discharge time of C_{11}. Space charge effects in V_4 further modify the discharge characteristics so that the components specified give a range of *Hold* from milliseconds to continuously *on.* In the *Manual* position of S_1, the cutoff bias for the second gating grid is removed and closes R_{Y1}.

THE PHONE PATCH SECTION of OMNIVOX is a hybrid circuit made up of a pair of transformers, a balancing network, cou-

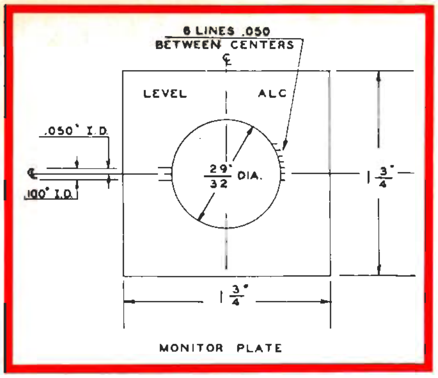

FIG. 6. DIMENSIONAL DIAGRAM of the escutcheon plate for the 6AL7-GT (V_5) indicator eye tube. Calibration marks at left are for maximum phone line level of 0.77 volt. Material used is $\frac{1}{16}$-inch thick black bakelite.

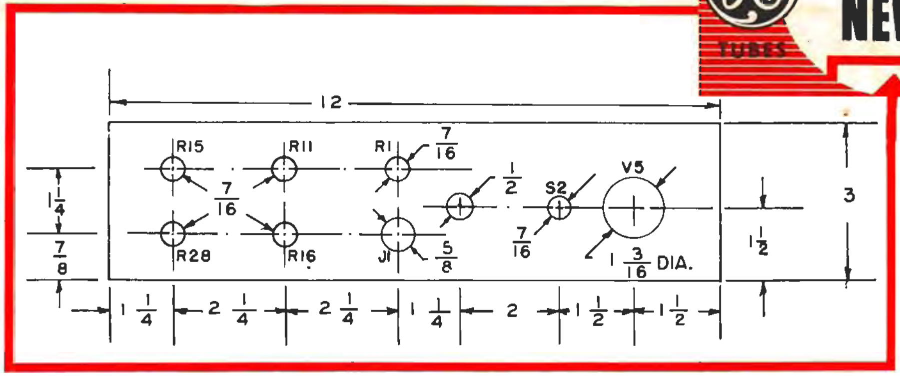

FIG. 7. DRILLING DIAGRAM for the chassis and front panel of the OMNIVOX. Dimensions can be changed to suit individual layout needs, but should follow the same pattern. Small holes for mounting hardware are not shown.

pling capacitors and a pi-section RF filter for the phone extension line. In the *OFF* position of S_2, the patch is off and is completely out of the circuit (with the exception of the RF filter which is left in at all times). In the *AUX.* position of S_2, the receiver output is switched to the *Receiver Output* jack (J_3). Simultaneously a 30 ohm resistor is connected in series with the speaker voice coil to attenuate the audio output about 10 decibels.

In the *PATCH* position of S_2, the hybrid transformers are connected to the telephone line through low-leakage paper coupling capacitors (C_{18} and C_{19}). In addition, while the speaker remains attenuated, a *Tee* network is connected between the receiver output and the primary of T_3, which couples audio from the receiver to the telephone line.

Earlier, it was explained that the 6AL7 (V_5) was driven by a negative voltage proportional to the peak receiver output voltage. In the PATCH-ON position of S_2, R_{35} (in the Tee network) can be adjusted so that the maximum audio voltage supplied to the 'phone line is equal to the maximum allowable line voltage (usually about 0.77 volts) for a specific amount of pattern compression on V_5. The escutcheon plate shown in Fig. 6 is marked for this purpose. Once this calibration has been accomplished, the 6AL7-GT eye tube monitor provides a direct means for checking the audio level to the line. This makes it possible for the operator to adjust the station receiver audio output to the proper patch operating level.

The *Balance* control (R_{26}) is used to adjust the current flow through the two sections of the primary of T_2 due to the presence of voltage across the secondary of T_3, so that receiver output is not coupled through T_2 to the audio amplifier section of OMNIVOX. To adjust R_{26}, the patch is switched on (after you have dialed an understanding friend on the land line) and the *Phone Gain* control (R_{11}) is opened to impress voltage from the secondary of T_2 on V_1. Receiver output is being fed into T_3 in this case and the circuit may tend to oscillate unless the *Sensitivity* control (R_{16}) is at minimum gain.

With the *Threshold* control (R_{12}) about mid-point, the *Patch Balance* control (R_{26}) may be adjusted slowly until the ALC monitoring section of V_5, indicating the amount of audio voltage out of V_{2A}, shows zero output voltage. The *Master Gain* control (R_1) may be opened further to increase the system gain for more precise balance. Although this adjustment is quite sensitive, the visual indication provided by V_5 makes this a simple operation. Following the balancing of the hybrid circuit, the calibration of phone line voltage versus V_5 pattern compression should be rechecked.

The OMNIVOX may now be operated from the phone line by adjusting the *Master Gain*, *Phone Gain* (R_{11}), and *Sensitivity* controls (R_{16}) appropriately. Slight compression of gain by ALC action from the voice input on the line should be indicated by V_5. When the microphone in the telephone is providing the audio signal, the ALC will reduce the gain of V_{2A} (depending on the setting of the *Threshold* control) so that the audio output is not excessive even though the output from the handset is many times greater than the usual 'phone line signal.

Note that the reduced speaker output in the *Patch-ON* position of S_2 helps prevent audio feedback from speaker to the telephone microphone. Changing S_2 from *"Patch-ON"* to

(continued on page 6)

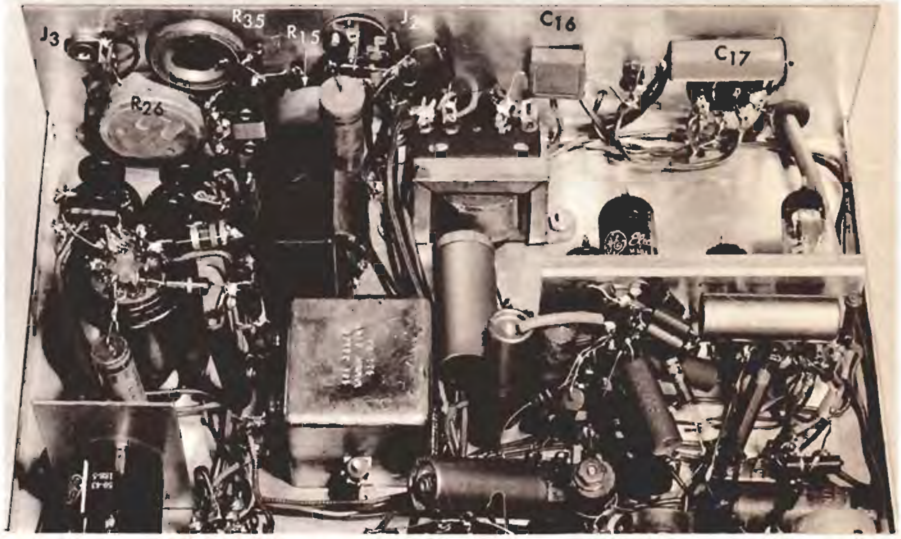

INSIDE VIEW of the OMNIVOX built in an 8 x 12 x 3-inch deep chassis box, looking toward rear side. Locations of major parts should follow the same general layout. Point-to-point wiring method was used, with terminal strips supporting clusters of small components near sub-chassis at right, and phone patch section at left.

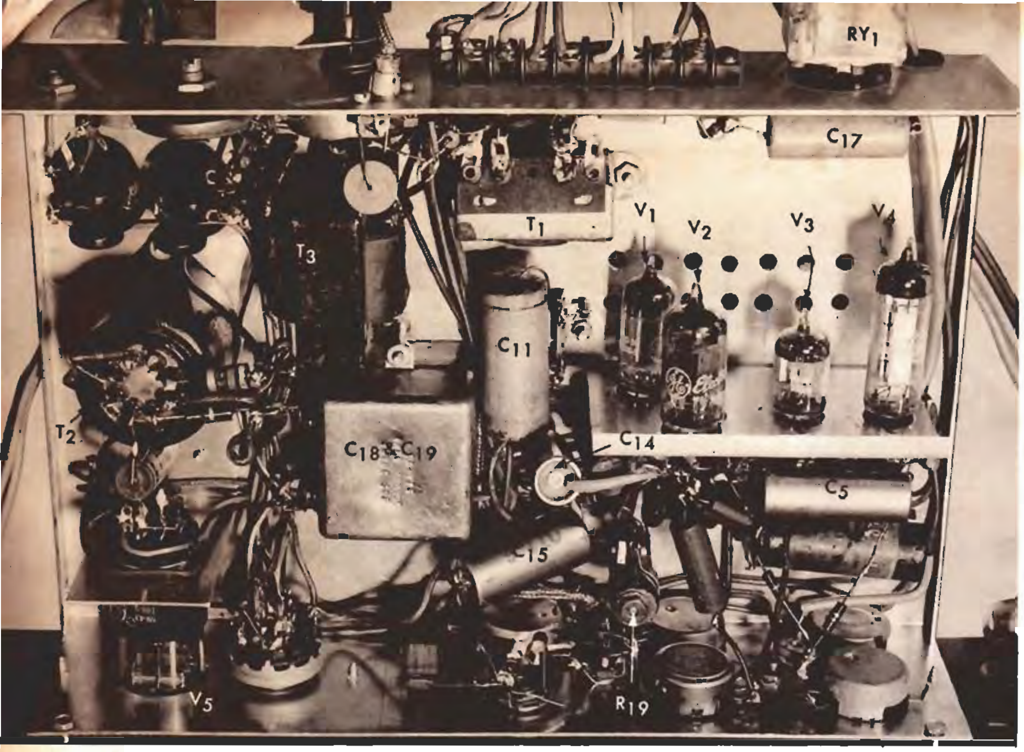

BEHIND-PANEL DETAILS are shown in this view. A small bracket made from $\frac{1}{16}$-inch thick sheet aluminum supports the socket for the 6AL7-GT indicator eye tube at left. The phone line isolating capacitors (C_{18} and C_{19}) are stacked and fastened with long machine screws at center of chassis.

OMNIVOX (continued from page 5)

"*Aux.*" provides an immediate disconnect between the phone line and the patch circuit without a blast from the speaker. When running a phone patch through the OMNIVOX, the positive gating action of the VOX control tube and the easy shift from automatic to manual control, provide sufficient flexibility to meet the variety of operating conditions and degree of familiarity with patch procedures likely to be encountered.

The 6AL7-GT monitoring indicator is also useful for frequency checking and zero-beating to net or roundtable frequencies. Since the indicator is DC-coupled to the 1N48 anti-trip diode, and the time constant of the filter is relatively short, the compressed pattern opens abruptly as zero-beat is approached between the received signal and the beating signal from a transmitter VFO, crystal calibrator, or interpolation oscillator.

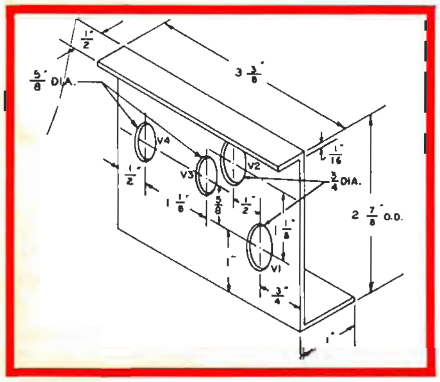

FIG. 8. LAYOUT DIAGRAM for the sub-chassis on which the four miniature tubes are mounted. A sheet of $\frac{1}{16}$-inch thick aluminum 4½ x 3⅜ inches is required.

It is possible to *see* the beat note down to about 2 cps with this system (this is usually close enough for most tuning). In order to use this feature on SSB it may be necessary to insert some carrier while setting the transmitter on frequency. For DSB (used by the author), or for AM, carrier is readily available at the operating frequency.

CONSTRUCTION of the author's model OMNIVOX was accomplished in an 8 x 12 x 3-inch chassis.

The pictures of the completed unit on pages 2, 5 and 6 show most of the pertinent constructional details. A smaller chassis size could be used if smaller parts than those from the author's junk box are available.

Controls which may be used during normal operation were mounted on the front side of the chassis in the locations shown in the drilling diagram, Fig. 7. The four control tubes (V_1 to V_4) were mounted internally on a small sub-chassis bracket running parallel to the front panel. Fabrication details of this bracket are shown in Fig. 8. The 6AL7-GT indicator tube (V_5) is mounted on another bracket made from $\frac{1}{16}$-inch thick sheet aluminum, located so that the tube protrudes through the $1\frac{7}{16}$-inch diameter hole in the chassis front (and panel, too).

An 8-terminal barrier strip for external signal connections, the *Gain Limiting Threshold* (R_{12}), *Patch Balance* (R_{26}) and *Calibrate* (R_{32}) controls, the *Receiver Output* (J_3) and *Audio Output* (J_2) jacks, and control relay (R_{Y1}), are mounted on the rear side of the chassis. Power for the heater and plate power come in on a 4-wire cable.

Almost all wiring is run with insulated hookup wire. Leads from J_1 to R_1, R_1 to the control grid of V_1, and to the *Phone Gain* control (R_{11}) are run with shielded single conductor wire. Small parts are mounted on lugs of components they connect with, and on terminal strips.

TESTING THE OMNIVOX, when completed consists of connecting it to a power supply furnishing 300 volts DC at 40 milliamperes, and 6.3 volts at 2 amperes. The audio section should be checked out first, and then bias voltage measurements in the ALC circuit are taken to check its operation.

The VOX circuit should then be tested, and calibration of the indicator eye tube is completed. Instructions for adjusting the various controls have been given heretofore in the description of the OMNIVOX circuits, and will not be repeated here. Balancing and testing of the *Phone Patch* circuit should be done last after the other adjustments have been completed.

Finally the chassis cover plate is installed with self-tapping screws, and the OMNIVOX is installed in the position it will occupy in the station. The package has been designed so that it can set under, or on top of, a receiver, speech amplifier, etc. Or, it can be stood on end between units on the operating desk. If the latter position is chosen, vent holes should be drilled in the chassis sides which form the bottom and top. Small rubber feet also should be secured to the bottom side.

Operation of OMNIVOX is pretty much automatic once the *Microphone Gain, Telephone Gain,* and *VOX Sensitivity* controls have been set. The *Anti-Trip* control should be adjusted so that speaker noise does not actuate the *VOX* circuit. The *Hold Time* control should be set to individual tastes, with sufficient hold in time so that R_{Y2} remains closed between spoken sentences.

Portions of the OMNIVOX circuitry may easily be adapted to existing transmitter audio equipment, if desired. The audio gain-controlled amplifier, with its speech frequency range emphasis, and the VOX circuits too, are superior to similar circuits found in some commercial transmitters.

Improve your amateur station by incorporating the complete OMNIVOX, or portions of the circuit, into your equipment.

VERSATILE POWER-CONTROL BOX

By Philip E. Hatfield, W9GFS

Few amateur stations today have equipment permanently wired to power lines through disconnect switches; rather, the trend toward tabletop units with simple power cord connections has sometimes brought about a tangle of extension cords and cube taps, necessary to connect a receiver, moderate power transmitter, and accessory equipment to the power line.

A useful accessory to lessen the power-line haywire may be easily constructed in the form of an AC outlet box — shown in the accompanying illustrations. The mechanical design can be tailored to fit individual installations. The box shown in use at W9GFS was intended for mounting on the side of a desk. A different layout would permit other mounting positions.

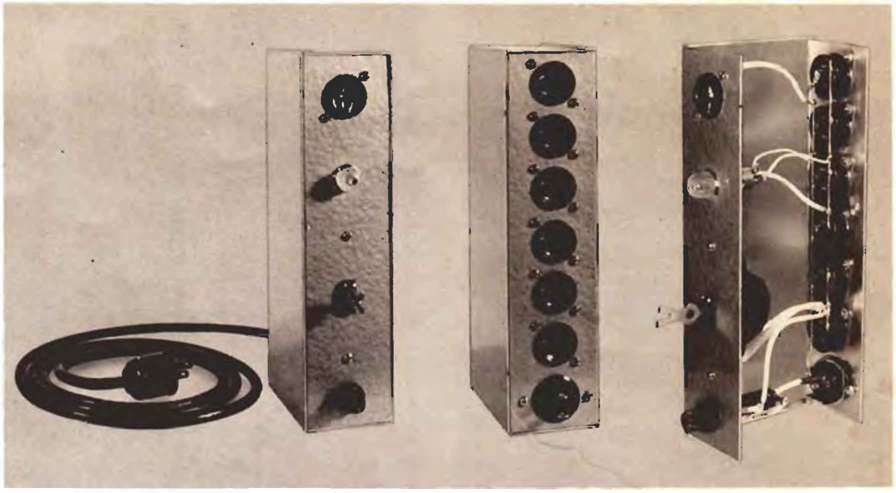

POWER CONTROL BOX constructed by W9GFS, showing (left to right) front, rear and inside views. Note tinned copper wire connections between outlet receptacles.

THE SCHEMATIC DIAGRAM, Fig. 1, shows the outlets split into groups: (1) those that remain on as long as the box is plugged in, intended for a desk lamp and clock; and (2) those controlled by a main switch (S_1) and intended for the receiver, transmitter, and accessories. A fuse is included in the circuit for all of the outlets.

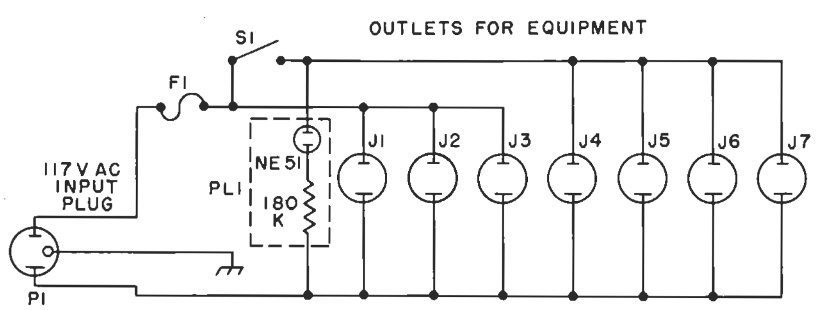

FIG. 1. SCHEMATIC DIAGRAM of the power control box. Wiring should be run with No. 14 or No. 12 wire. The three outlets at left (J_1, J_2, and J_3) have power on them continuously. Polarized receptacles and plugs may be used if available.

TABLE I — PARTS LIST — POWER CONTROL BOX

F_1	Fuse holder for 3AG fuse, and fuse rated at 5 or 10 amperes, depending on load drawn from box.
J_1 to J_7	2-prong female power receptacles for chassis mounting (Amphenol 61-MIP-61F)
P_1	2-prong male power connector for chassis mounting (Amphenol 61-MIP-1)
PL_1	Panel lamp assembly with dropping resistor for NE-51 Neon lamp.
S_1	Lock type flush tumbler switch (Bryant 5861-L, or equivalent).
Box	LMB No. 144 box chassis 10 x 4 x 2½ inches.

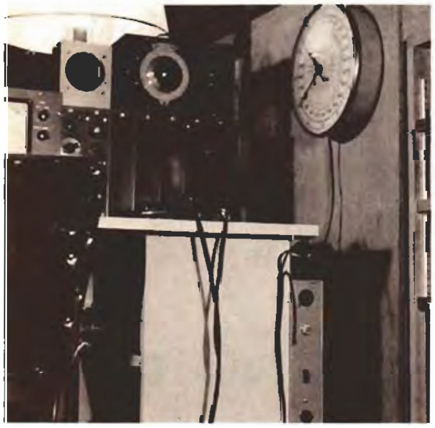

INSTALLATION of power control box at W9GFS fastened to the side of operating console.

The input plug and all of the outlets but one are mounted on the rear of the box, since constant accessibility is not necessary. One outlet in the group not controlled by the switch is mounted on the front to allow ready accessibility for a soldering gun. The neon lamp on the front of the box indicates when the *switched* group of outlets are on.

The switch allows all station units to be turned on or off without the use of the switches on the individual units. The switch on the model shown requires a key to turn it on; this prevents children from energizing the equipment. A conventional wall-switch which has the same dimensions may be substituted.

All of the outlets used are of the polarized type, and care should be taken in connecting the plugs on the attachment cord to preserve the polarity realtionship. If the box will be used within reach of a ground, a 3-wire safety type plug should be used to ground the box.

This control box usually will handle transmitters rated at up to 200 watts input. Higher power transmitters, especially those in the kilowatt class, should be powered from a separate circuit. However, all station equipment except a large transmitter can be controlled by the power control box.

Devote one or two evenings to eliminating your line cord haywire by constructing this handy box.

SCANNING THE SPECTRUM

A New Feature — MEET OUR AMATEUR TUBE DISTRIBUTORS —

Uncle Dave Marks, W2APF (center), visited the amateur radio station at Vatican City, HV1CN, on a trip to Europe recently. At left is Dr. Loris Castaldi, I1CL, who acted as interpreter and, at right, Domenico Petti, Chief Operator and Custodian of HV1CN.

W2APF is widely known as the operator of UNCLEDAVE'S Radio Shack in Albany, New York. During several foreign and globe-girdling tours, Dave has met thousands of radio amateurs, and may well have set a record for this feat.

CAPACITORS FOR HAMS — General Electric's new line of "application rated" Service-Designed Alumalytic® capacitors will replace more than 1,200 different types with only 275 twist-prong and tubular types. Amateurs will find them ideal for replacement, or for new home-built equipment. Ask for them at your G-E Tube distributor's.

MEET OUR AUTHORS —

W9GFS — Philip E. Hatfield, found a solution to the usual tangle of power cords and cube taps in the neat power control box for his station described on page 7.

Phil's previous contributions to G-E HAM NEWS have been the GADGET RACK and accessories in the September-October, 1958 issue, and "OPERATING G-E HI-FI TUBES AS MODULATORS" in the January-February, 1960 issue.

Vocationally, W9GFS is a technical data engineer with G.E.'s Receiving Tube Department here in Owensboro. He has authorized several articles for QST, Electronics World, and other publications.

W4PFQ — Allen (Al) P. Haase, needed a combination audio preamplifier, with automatic gain control, voice-controlled break-in circuit, and phone patch. The result, after many hours of construction and testing, is the OMNIVOX described in this issue on pages 1 to 6.

Al's fine station is shown on page 1. The transmitter is completely home constructed, including the exciter unit at the right.

W4PFQ is Manager of Advanced Development Engineering for General Electric's Receiving Tube Department in Owensboro. He and his staff are busily engaged in developing exotic new thermionic devices like TIMMS circuits, the tiny high-temperature, radiation-resistant packaged electronics circuits described on page 2 of the July-August, 1959 issue.

GE TUBES HAM NEWS

Available **FREE** from your G-E Tube Distributor

JANUARY-
FEBRUARY
1961
VOL. 16, NO. 1

MARCH-APRIL, 1961

TUBES

HAM NEWS

THE SSB-600

W8DLD and **W8WFH** (right) run the SSB-600 linear amplifier through power-output tests. Equipment includes SSB exciter (left), modified BC-453 Command Set receiver, SSB-600 amplifier, and commercially-made r.f. wattmeter and dummy antenna load. W8DLD is supervisor of the Electronics Laboratory at General Electric's Cuyahoga Lamp Plant; and W8WFH, William C. Louden, is technical counselor in Discharge Advance Engineering at G. E.'s Large Lamp Department, both at G. E.'s Nela Park in Cleveland, Ohio. W8DLD and W8WFH recently authored the **G-E HAM NEWS** series of articles on high-power Mobile Radio Systems, including Power Supply Ideas, Crystal Controlled Converters and a BC-453 Command Set receiver conversion, and a high-power Mobile Linear Amplifier with two GL-4D21/4-125-A's in parallel.

GROUNDED-GRID LINEAR AMPLIFIER

— 600 Watts DC Input in 600 Cubic Inches

By A. F. Prescott, W8DLD

FEATURES —

1. Efficient high frequency pi-network output circuit;
2. Complete metering of each tube;
3. Two GL-814 pentodes in zero-bias triode connection;
4. Rugged, compact construction for mobile service;
5. Covers 3.5 to 30 megacycles;
6. Only 6 x 10 x 10 inches in size.

You probably remember the old saying, "Do as I say, not as I do." W8DLD has been *saying* how to build this mobile SSB linear amplifier for years, after first constructing a model from *junk-box* parts. He recently has been *doing*, instead of saying, however, by constructing a new — and much prettier — model of his amplifier especially for this publication.

Over five years of testing in mobile and fixed service have been chalked up by the original model. It has several worthy electrical and mechanical features that make it stand out from being "just another linear amplifier."

THE GL-814 BEAM PENTODE was chosen for an amplifier tube because, when connected as a triode (control, screen and suppressor grids all connected together and returned to the filament) it exhibits zero bias characteristics and draws only 25 milliamperes of plate current with 2,000 plate volts applied. Since the rated plate dissipation of the GL-814 is 70 watts in ICAS[1] service, it was decided to connect two tubes in parallel to obtain about 600 watts DC input

---

[1] Intermittent Commercial and Amateur Service ratings.

(continued on page 2)

CLOSEUP FRONT VIEW of the SSB-600 amplifier. Note complete operating instructions at top of panel (see copy on page 7). Markings for panel controls were engraved on black plastic name plate material.

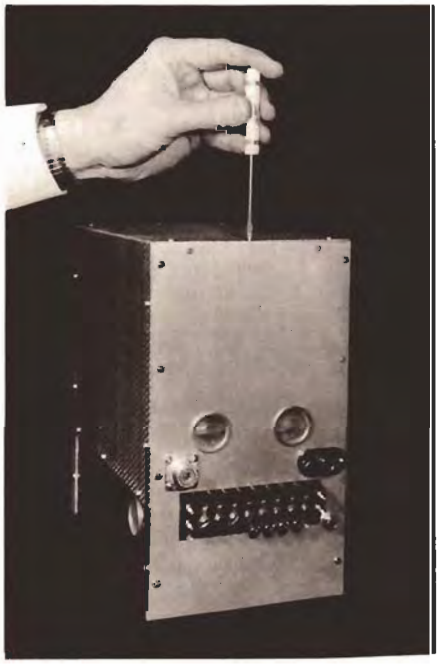

REAR VIEW of the amplifier. Locations for J_3, J_1, the high voltage connector, and terminal strip TS_1 can be determined from this view. Note ventilating snap-in buttons on sides and back.

IN THIS ISSUE

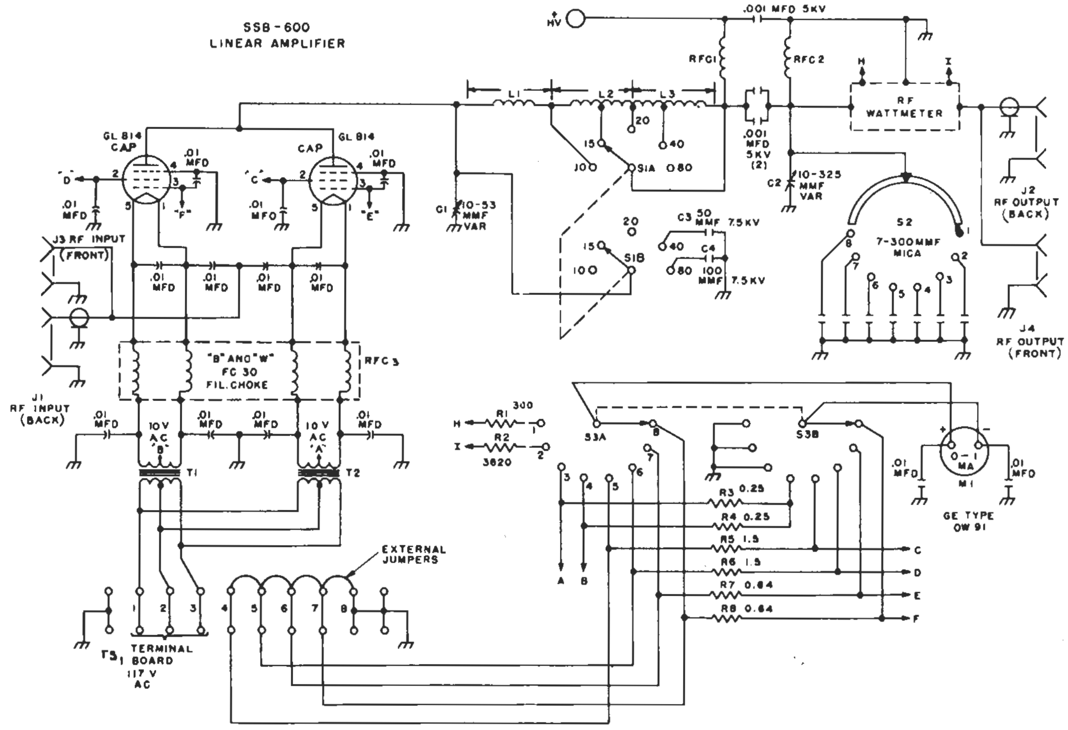

FIG. 1. SCHEMATIC DIAGRAM for the SSB-600 grounded-grid linear amplifier. Note the dual r.f. input (J_1 and J_3) and output (J_2 and J_4) jacks; one set of each is on the front and rear panels. The extra set is handy for picking up samples of the input and output signals for testing. The three 0.001-mfd. 5-KV capacitors in the plate circuit for DC blocking and bypassing are Centralab type 858S-1000 cylindrical ceramic capacitors. If separate metering of currents drawn by each tube is not necessary, a single 10-volt, 7-ampere filament transformer, and B & W FC-15 single filament r.f. choke can be used in place of the components shown. All bypass capacitors are 600-volt working disc ceramics, unless otherwise marked. Use terminals 1 and 2 on TS_1 for 105-volt AC input to the filament transformers.

SSB-600 (continued from page 1)

capability in the low duty-cycle SSB and CW classes of service.

The grounded-grid circuit was selected because it eliminates a tuned input circuit in the linear amplifier. Also, sufficient driving power was available — about 40 to 50 watts — to drive the two GL-814 tubes in a grounded-grid, triode connected circuit, to full output. Driving power is fed directly into each side of each GL-814 filament through 0.01-mfd. disc ceramic capacitors, as shown in the schematic diagram, Fig. 1. A commercially made filament choke isolates r.f. energy from the filament transformers, T_1 and T_2. Cathode input impedance is 100 to 200 ohms, depending on frequency.

The plate circuit is a pi network, with high voltage series fed through an r.f. choke (RFC_1). This permits more inductance to appear in the pi network on 28 megacycles. When parallel feed is used for plate voltage application the distributed capacitance of the r.f. choke and DC blocking capacitor appear as a part of the input capacitance across the pi network, which is very undesirable.

When the output capacitance of the amplifier tubes is added to this input capacitance, it often is impossible to realize a desirable tank circuit "Q" on 28, and sometimes even on 21 megacycles. The need for parasitic chokes in the tube plate leads also is eliminated.

This circuit also has been tested with four tubes connected in parallel without encountering parasitic oscillation. The only precaution was to use four tube plate leads of equal length to the common point of parallel connection.

Bandswitching of the pi-network circuit was achieved with a tap switch (S_{1A}) to short out sections of the inductance (L_1, L_2 and L_3) as required. The input tuning capacitor of the pi network (C_1) has only 50-mmf maximum capacitance, and is used alone for 14, 21 and 28 megacycles. Another section of the bandswitch (S_{1B}) adds a 50-mmf fixed vacuum capacitor (C_3) for 7 megacycles, and a 100-mmf vacuum capacitor (C_4) for 3.5 megacycles. This system permits selecting a tuning capacitor with low minimum capacitance and good ease of tuning for the higher frequencies, and still have sufficient capacitance for good circuit "Q" at 7 and 3.5 megacycles.

G-E TUBES HAM NEWS

presents HOW-TO-DO-IT IDEAS from the 999 radio amateurs at GENERAL ELECTRIC

A bi-monthly publication of the RECEIVING TUBE DEPARTMENT
Owensboro, Kentucky, U. S. A. • Editor — E. A. Neal, W4ITC

G-E HAM NEWS is available free from authorized G-E Tube distributors. Some distributors mail copies locally to their customers.

A low-cost direct-mail subscription plan is available to persons residing in the United States and its possessions (including APO and FPO numbers).

Subscription rates are:

One Year (6 issues)	$1.00
Two Years (12 issues)	$2.00
Three Years (18 issues)	$3.00
Five Years (30 issues)	$4.00

Enclose check or money order for U. S. currency for the proper amount above made payable to "General Electric Company."

Residents of Canada may subscribe to **G-E HAM NEWS** for $1.00 per year from the Canadian General Electric Company, Ltd., Electronic Tube Marketing Section, 189 Dufferin Street, Toronto 3, Ontario, Canada. Enclose check or money order made payable to: "Canadian General Electric Company, Ltd."

Distribution of **G-E HAM NEWS** in more than 40 foreign countries is handled through the International General Electric Company. A listing of outlets is available from the **G-E HAM NEWS** office. Or, write to: Customer Inquiry Section, International General Electric Company, 150 East 42nd Street, 7th Floor, New York 17, New York, U. S. A.

TABLE I — PARTS LIST

C_1.....10-53-mmf variable, 0.125-inch air gap (Johnson 50E45, Cat. No. 154-12).
C_2.....10-325-mmf variable, 0.025-inch air gap (Hammarlund MC-325-M, or equivalent).
C_3.....50-mmf, 7,500-volt fixed vacuum capacitor (G. E. 1L38, or equivalent).
C_4.....100-mmf, 7,500-volt fixed vacuum capacitor (G. E. 1L33, or equivalent).
J_1, J_2......midget one-pin phono type connectors.
J_3, J_4......chassis type coaxial jack. (SO-239).
L_1......0.65 uh., 5 turns, $\frac{3}{16}$-inch diameter copper tubing, 1¼ inches inside diameter, 1¾ inches long (28-Mc. coil).
L_2......2 uh., 5 turns, ⅛-inch diameter copper tubing or wire, 2¼ inches inside diameter, ¾ of an inch long, tapped at 2 turns from L_1 end (14 & 21-Mc. coil).
L_3......9 uh., 14 turns, No. 12 tinned copper wire, 2½ inches in diameter, 2⅜ inches long, tapped at 5 turns from L_2 end (7 & 3.5 megacycles) (B & W No. 3905-1 coil stock, or equivalent).
M_1....0—1-milliampere DC meter, 2½-inch square flange (G. E. DW-91).
R_1.....300 ohms, 1 watt total, precision type.
R_2.....3620 ohms, 1 watt, precision type.
R_3, R_4......0.25 ohms, 1 watt, precision type.
R_5, R_6......1.5 ohms, 1 watt, precision type.
R_7, R_8......0.64 ohms, 1 watt, precision type.
RFC_1..100-uh. solenoid type single layer r.f. choke; 140 turns of No. 26 enameled wire closewound 2½ inches long on ¾-inch diameter ceramic pillar 3 inches long.
RFC_2..2.5-mh, 250-milliampere pi-wound r.f. choke (National R-300, or equivalent).
RFC_3..Dual 15-ampere filament r.f. choke (B & W FC-30).
S_1..... 5-position, 2 pole, heavy-duty rotary tap switch (Shallcross type 12609[2] or Radio Switch Corp. No. 86 Standard).
S_2......10-position, 1 pole, progressive shorting rotary tap switch (Centralab No. 2042).
S_3......8-position, 2 pole rotary tap switch (Centralab No. 1413, 11 positions).
T_1 T_2......10-volt, 4-ampere filament transformer, 115-volt primary (Stancor P-5016, or P-6458; Thordarson T-21F18).

[2] Shallcross Manufacturing Co., Selma, North Carolina. See manufacturers' representatives listing in Electronics Buyers Guide for nearest distributor.

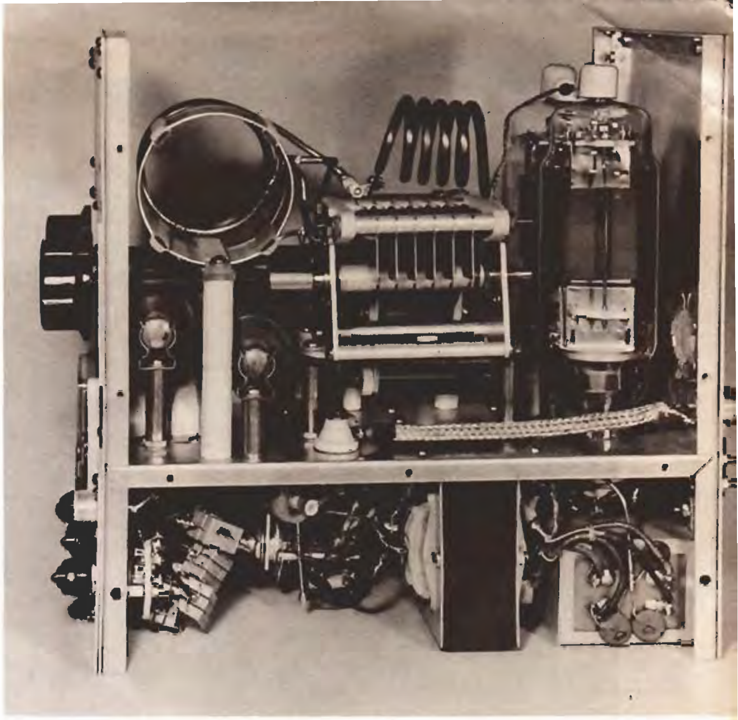

LEFT SIDE VIEW, showing how C_3, C_4, RFC_2 and S_1 are mounted on ceramic pillars. Coils L_2 and L_3 are cemented to plastic strips supported on ceramic pillars.

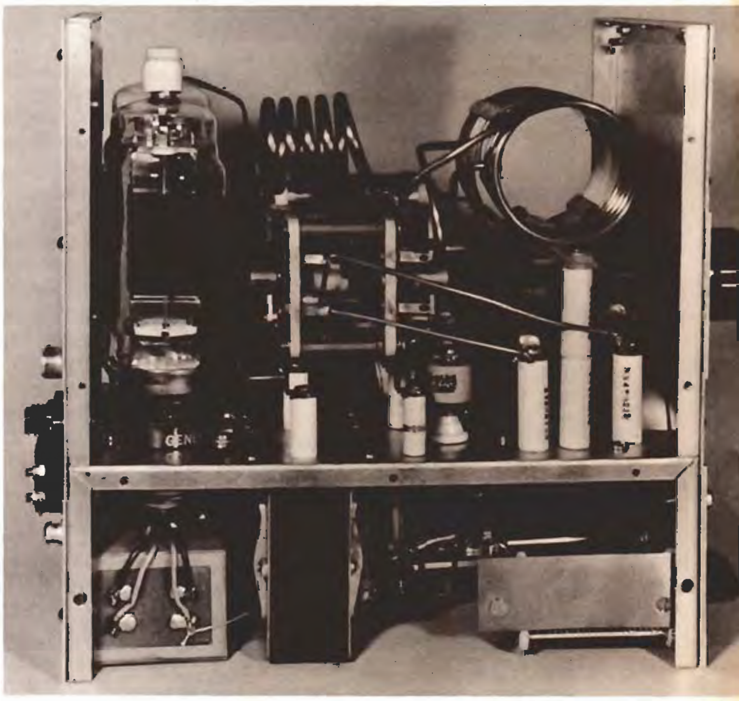

RIGHT SIDE VIEW, showing metal pillars for grounded ends of C_3 and C_4. Insulated shafts are used for C_4 and S_1 extensions to the panel knobs. GL-814 tube sockets are sub-mounted ½ inch on pillar insulators.

The same reasoning was applied to the loading capacitance (C_2). A 10 to 325-mmf variable is used for the higher frequencies, and additional capacitance, up to 2,100 mmf, is cut in by S_2 in steps of 300 mmf. RFC_2 is a safety choke.

THE METERING CIRCUIT provides for measuring control and screen grid, and cathode currents in each GL-814 individually. This permits selecting a matched pair of GL-814's (if you happen to have spares around), and is also handy for insuring that each tube is sharing the load.

It also allows you to catch a tube starting to go bad before it has a chance to wreck its mate. Many poor signals are caused by weak tubes, causing the other tubes in parallel to be overloaded or to work under improper loading conditions.

Control grid (No. 1 grid) current is normally considered of great importance. This amplifier also has number two grids metered independently. A "look-see" in this circuit is not only interesting but educational. This eliminates guessing as to the division of the drive between the control grid and screen grid.

The cathode circuits are metered in the filament center tap. Remember to subtract control grid and screen grid currents from this reading to determine true plate current. Normal cathode current may be read, but it may be abnormal grid current due to drive and loading that is responsible for this reading.

W8DLD also has built an r.f. wattmeter right into this amplifier. The circuit is described in the May-June, 1961 issue. (See LOW-COST RF WATTMETER, page 1.) Forward power up to 500 watts full scale is read in position 1 of S_3; and, reflected power up to 50 watts full scale is read in position 2. Thus, readings of nearly 500 watts forward and less than 50 watts reflected power indicate less than 10 per cent reflected power, and a VSWR of less than 2 to 1. The reflected power position can be precisely calibrated with a 50-ohm dummy load.

CONSTRUCTION OF THIS MODEL was accomplished in a 6 x 10 x 3½-inch deep chassis box (*Bud* CU-3010A Minibox, or equivalent). The parts layout shown in the accompanying pictures and chassis layout drawing, Fig. 2, provides very short r.f. circuit leads and good isolation of the input circuit. Nearly all of the 600 cubic inches of volume in the enclosure are occupied, as readers will note.

The complete enclosure should be constructed first. The 6 x 10-inch end

(continued on page 4)

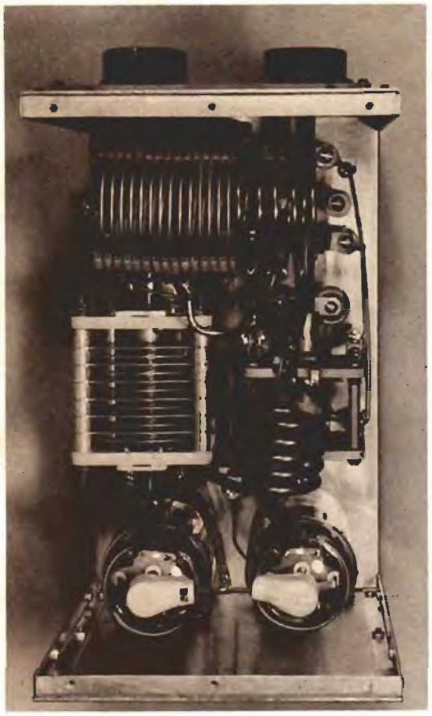

TOP VIEW of the SSB-600 amplifier. Details of tank coil mounting and connections are shown in this view. Allow enough slack in GL-814 plate lead to remove plate caps.

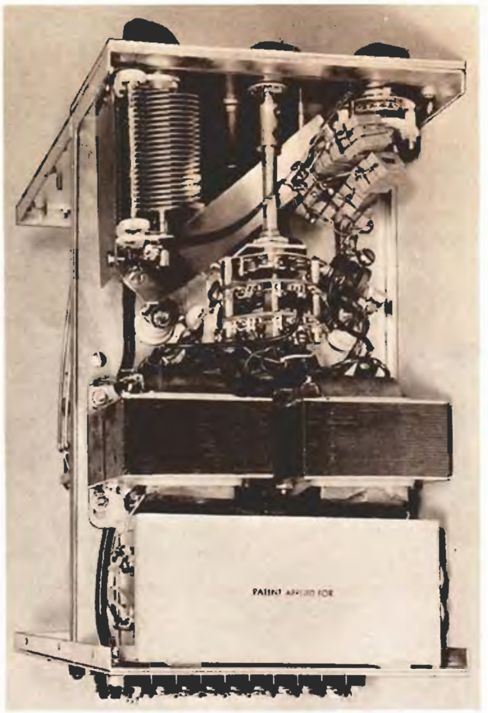

BOTTOM VIEW, showing heavy copper strip connections between C_2, S_2 and the seven 300-mmf. loading capacitors. The FC-30 filament r.f. choke mounts beneath the GL-814 sockets.

SSB-600

(continued from page 3)

plates were cut from 1/16-inch thick sheet aluminum. Pieces of ½ x ½ x 1/32-inch aluminum angle were then fitted to form a flange to which the shield is fastened. About 38 inches of angle stock is required. If sheet metal bending equipment is available, these flanges could be formed on the end plates.

Perforated sheet aluminum (Reynolds or equivalent) about 10⅛ x 20 inches is then folded to form the shield cover, as shown in the pictures. The complete enclosure becomes quite rigid when the shield and bottom cover are in place, despite its light weight. The enclosure is then disassembled, including removing front and back panels, to layout and drill holes for the components. Panel layout is shown in Fig. 3.

After punching and drilling holes for the major components, a shield for the meter (M_1) is fabricated as shown in the drawing, Fig. 4, and fastened over the cutout in the chassis to protect the meter from the r.f. field around the plate circuit.

The larger components should be mounted and wired into place. Note that pieces of thin sheet copper flashing have been placed under the chassis between the loading capacitor (C_2) and capacitor switch (S_2) to provide a low-resistance path for the high r.f. currents in this circuit. Copper strip ½ inch wide is used for connecting leads in this circuit. This pays off in higher efficiency at 21 and 28 megacycles. A copper-clad or solid copper chassis also would help the efficiency, if available.

Components for the r.f. wattmeter should be mounted underneath in the center of the chassis before the meter switch, S_3, is assembled. Bypass capacitors and other wiring around the tube sockets are installed before the filament r.f. choke is mounted. Return as many bypass capacitors as possible to a common chassis ground. A terminal strip (TS_1) was installed on this model for external power connections, but a suitable multiple-pin jack and plug can be used if desired.

Provision for remote measurement of control and screen grid currents is made by connecting the appropriate current meter between terminals 4 to 7, as follows:

4 to ground: G-2 (right) 50 ma.
5 to ground: G-2 (left) 50 ma.
6 to ground: G-1 (right) 100 ma.
7 to ground: G-1 (left) 100 ma.

ALL COMPONENTS in this amplifier have been chosen to handle higher power. Thus, a pair of GL-813 beam pentodes could be substituted for the GL-814's if the chassis is made larger; 7 x 12 x 4 inches (A *Bud* CU-3011A Minibox, or equivalent). However, this size chassis also will hold four type GL-814's in parallel, if anyone prefers to run four of these tubes. Larger filament transformers will be required, of course.

If a pair of GL-813's are used, a well regulated negative bias supply will be required to furnish the approximately minus 70 volts of control grid bias required to hold the plate current to a low value with the triode connection. For this your signal would be 3 DB louder at your friend's receiver. This is less than one S unit. It is frequently easier to gain 3 DB with a little antenna work than by many hours and dollars spent on the linear amplifier.

Some amateurs may want to construct this amplifier as a subassembly to go into a chassis that includes a power supply. This chassis may also include a driver amplifier for use with an exciter delivering less than 50 watts output. When built as an assembly to go into a chassis cabinet arrangement the "do it yourself" enclosure construction is not necessary.

The small package, complete amplifier described herein was constructed because it was meant to serve mainly for mobile operation.

ADJUSTMENT AND TUNEUP of this amplifier, after construction is completed, should be done carefully to avoid overloading the tubes for extended periods and thus damaging them. Connect 117 volts AC to terminals 1 and 3, and J_1 to an exciter capable of delivering about 50 watts; the output jack, J_2, to a 50-ohm dummy antenna load capable of dissipating 500 watts; and the "HV" terminal to a power supply delivering about 1,500 volts DC at 300 ma.

Turn on heater power, high voltage, and apply about 5 watts of driving power at 3.9 megacycles. Set S_1 to the 3.5-megacycle position and adjust the plate circuit tuning (C_1) and loading (C_2) capacitors for maximum output with S_3 in position 2 (RF output, forward).

Increase the driving power to about 25 watts and readjust the tuning for maximum output. Then increase the driving power so that 40 milliamperes of grid current is read for each GL-814 in positions 7 and 8 of S_3. Again adjust the tuning and loading controls for maximum output. If the amplifier is delivering about 300 watts output, then reduce the driving power a bit and readjust the tuning and loading controls. Output power should be close to the maximum value obtained above.

For test purposes, increase the plate voltage to about 2,400 volts DC and tune carefully for maximum output, running the amplifier for only a minute at a time. It should be possible to obtain 500 watts CW output on all bands from 3.5 to 28 megacycles at 2,400 plate volts, and with a maximum of 40 milliamperes of control grid current per tube. Cathode current will read about 200 milliamperes per tube. At 2,000 to 2,250 plate volts, the amplifier will deliver about 400 watts at 28 megacycles, and 450 watts below 21.5 megacycles.

Frequently it happens that an exciter capable of delivering 100 watts power output into a dummy load will not supply the necessary drive to the cathode circuit of a grounded-grid amplifier due to an impedance mismatch. A matching network or coupler should then be used between the exciter and amplifier to achieve a match.[3]

PERFORMANCE of the amplifier when constructed as illustrated will assure 60% efficiency at 28 megacycles, rising to 70% at 4 megacycles. This may sound high, but the driving power has not been subtracted from the efficiency figure. The amplifier shows a power gain in excess of 10 times. This means that 50 watts should be fed into the input jack if 500 watts output is desired. There is no way to cheat on these figures!

So far this testing has been done under CW conditions. Now the real test comes with an oscilloscope. Connect the scope to the amplifier test output jack, J_4. Note the two input and output jacks for easy access to a monitoring spot. Turn on the 500-watt output CW test and set the scope for a good sized CW display. The pattern should be a pure RF carrier. With a grease pencil or crayon, mark the height of this display on the scope screen.

Now switch to SSB and slowly advance the audio gain while speaking into the mike until peaks of the height marked for CW are reached. This indicates that the amplifier is delivering 500 watts peak output. Now adjust the scope for a slow sweep and look at the so called "Christmas tree pattern." Is there any flattening or distortion noticeable at this 500-watt level; or, can the audio level be increased?

If flattening is indicated, plug the scope into the input jack of the linear which will allow monitoring of the exciter. If the same flattening is present, it is coming from the driver. If a display with no flattening is seen, it must be in the linear stage. Try a slight increase in loading by decreasing the load capacitance (C_2). Did this cure the flattening? With 50 watts of linear drive, at least 500 watts output without distortion should be seen on the scope. It may be possible to further increase the drive without distortion. Remember that the scope is reading an instantaneous voltage. Also remember that the wattmeter will only read average power and so is of no value for this test.

The 500-watt peak output can be directly compared with any other

(continued on page 7)

---

[3] A suitable pi-network impedance matching coupler is described on page 4 of the November-December, 1959 (Vol. 14, No. 6) issue of G-E Ham News.

TABLE II — DRILL SIZE LEGEND

"A" drill—No. 31 clears 4-40 screw.
"B" drill—No. 26 clears 6-32 screw.
"C" drill—No. 17 clears 8-32 screw.
"D" drill—No. 9 clears 10-32 screw.
"E" drill—9/32-inch diameter.
"F" drill—3/8-inch diameter.
"G" drill—1/2-inch diameter.
"H" socket punch—5/8-inch diameter for 7-pin miniature tube socket.
"J" socket punch—3/4-inch diameter for 9-pin miniature tube socket.
"K" socket punch—1 1/8-inch diameter for small octal tube socket.
"L" socket punch—1 1/4-inch diameter for large receiving tube socket.

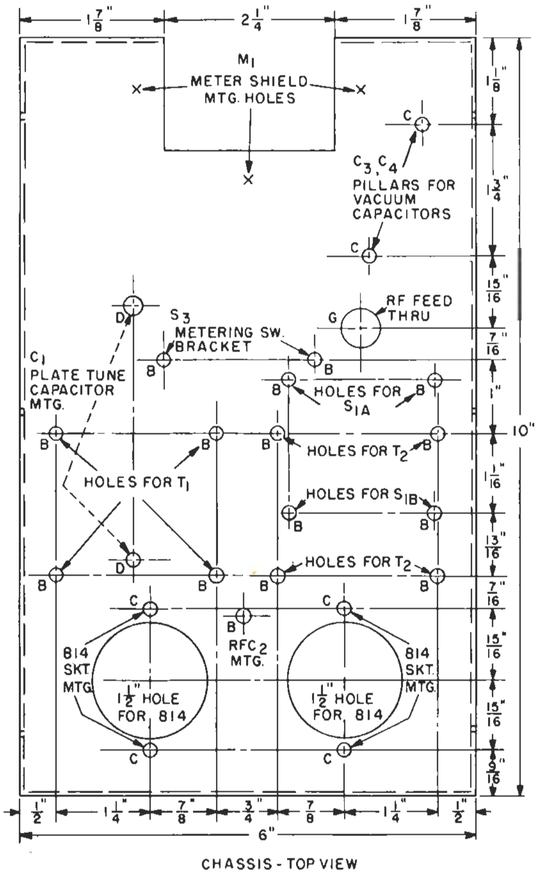

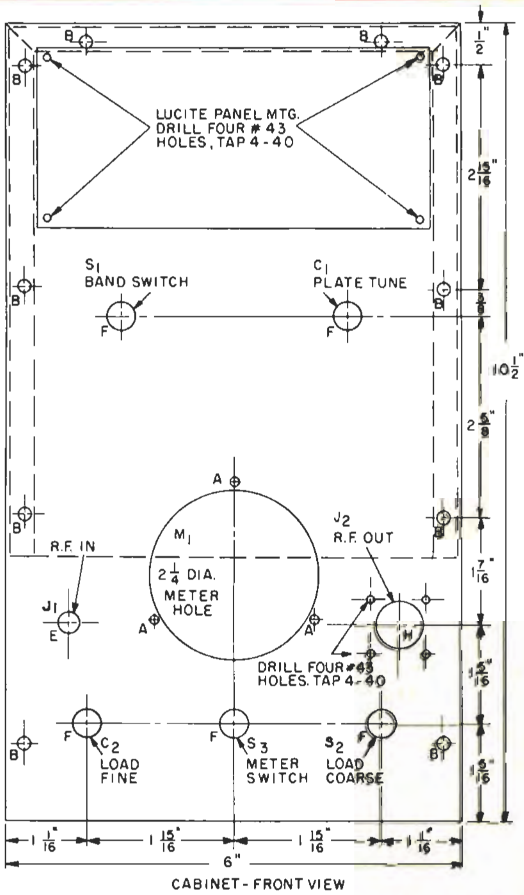

FIG. 2. CHASSIS LAYOUT DIAGRAM, showing the actual drilling for major parts on W8DLD's model amplifier with two GL-814 pentodes. See TABLE II for the sizes of holes keyed with letters. Locations of small holes marked C_1, C_3, C_4, RFC_2, S_1, T_1 and T_2 are for the components actually used, and should be moved to suit components having different mounting dimensions. The cutout for M_1 should clear the connecting terminals on the back of the meter.

FIG. 3. FRONT PANEL LAYOUT DIAGRAM for the amplifier. The front of the chassis also should be identically drilled, using the panel as a template. Locations for the shafts on C_1, C_2, S_1, S_2 and S_3 probably will be the same even if similar components are substituted for those specified in TABLE I. Meter mounting holes, marked "A," may differ and should be located from the meter actually used.

SIMPLIFIED SENSITIVE MULTIMETER

By Charles A. Starks, W2URP

A SENSITIVE DC MULTIMETER is always a handy instrument in the amateur radio station. However, complex instruments of this type can be expensive.

"But, they don't have to be," says Chuck, W2URP. "Look at my simple, sensitive DC voltmeter that the average amateur can duplicate in a single evening.

"I needed a DC voltmeter with very high resistance to check and precisely adjust the negative bias on the control grids of the output stage in the new SSB transmitter I added to my station recently. A conventional 1,000 ohms-per-volt meter would have loaded down the circuit excessively and given me a lower-than-actual reading.

"A quick scan through my junk box under the workbench turned up a 100-microampere DC current meter, a sloping panel meter box, and some miscellaneous banana plugs and jacks, terminal boards and hardware.

"A few minutes of figuring with a pencil — after referring to the 'Measurements' chapter of the *Radio Amateur's Handbook* — and I had the multiplier resistance values required for several popular DC voltage ranges. I used the following formula to calculate the multiplier values: $R = \frac{1000E}{I}$; where R is the resistance in ohms; E is the desired full-scale voltage; and I is the full-scale reading of the meter in milliamperes. The 100-microampere meter thus gave a sensitivity of 10,000 ohms per volt.

"Rather than switch in the various multipliers with a tap switch, I decided that each multiplier could be mounted on a terminal board that would plug into the back of the meter case. This provided for future needs by allowing additional ranges to be added at any time."

This is the philosophy with which the Simplified Sensitive Multimeter was designed.

THE CIRCUIT of the multimeter is extremely simple, as shown in the schematic, Fig. 1. Multipliers plug into J_4 and J_5, and the leads running to the circuit to be measured plug into J_1 and J_2. Provision can also be made to measure currents with this instrument by plugging in a shunting resistance of suitable value across the meter at J_3 and J_5.

W2URP adjusts the control grid bias in his SSB transmitter with his Simplified Sensitive Multimeter. Well-equipped station — and workshop too — includes kilowatt linear amplifier next to SSB transmitter, and matching receiver to right of amplifier. W2URP is an engineer in the Power Rectifier Engineering section of General Electric's Power Tube Department at Schenectady, N.Y. Chuck's favorite bands are 3.9 and 7-MC. SSB, and 7-MC. CW.

CLOSEUP VIEW of Simplified Sensitive Multimeter with boards containing multiplier resistors beside it. Shunt for measuring current also can be connected between feedthru terminals, as shown here. CAUTION: Exposed terminals and multiplier strip should be covered with insulation when high voltage circuits are being measured.

REAR VIEW of meter showing multiplier board plugged into J_4 and J_5 on rear of meter box. A multiplier with a single resistor can be made from a narrow strip of insulating board, with the resistor connected between soldering lugs on the plugs.

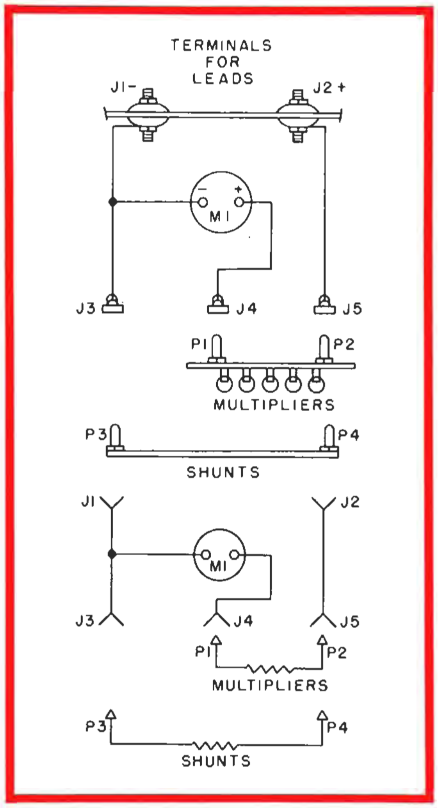

Fig. 1. Schematic diagram of the simple multimeter. Terminals J_1 and J_2 are feedthru insulators with either stud terminals or banana jacks. Jacks J_3, J_4 and J_5 are banana jacks for the multipliers and shunts. Plugs P_1 and P_2 are maunted on the insulating boards holding the multiplier resistors. Plugs P_3 and P_4 are on the shunting resistances.

TABLE I — METER MULTIPLIER CHART

Full Scale Meter Reading Desired	Multiplier for 20 ua meter	Multiplier for 50 ua meter	Multiplier for 100 ua meter	Multiplier for 250 ua meter	Multiplier for 500 ua meter
0.1 Volt	5,000 ohms	2,000 ohms	1,000 ohms	400 ohms	200 ohms
1.0 Volt	50,000 ohms	20,000 ohms	10,000 ohms	4,000 ohms	2,000 ohms
10.0 Volts	0.5 megohm	0.2 megohm	0.1 megohm	40,000 ohms	20,000 ohms
100 Volts	5 megohms	2.0 megohms	1.0 megohm	0.4 megohm	0.2 megohm
1,000 Volts	50 megohms	20.0 megohms	10.0 megohms	4.0 megohms	2.0 megohms

GROUNDED GRID — LINEAR AMPLIFIER — 500 WATTS OUTPUT CW

Parallel connected GL814 tubes — Design data: Min. EP 2000 Max. EP 2500, Optimum EP 2250. For SSB Linear operation load to 300 MA total IP, with 75MA total Igl.

Meter Switch Position	Reading	Position	Loading Capacity	Band
1 = watts reflected	X50	1 = fine	10 to 325	10
2 = watts forward	X500	2 = adds 300	325 to 625	15 to 20
3 = Ik MA right 814	X250	3 = adds 300	625 to 925	20
4 = Ik MA left 814	X250	4 = adds 300	925 to 1225	40
5 = Ig2 MA right 814	X50	5 = adds 300	1225 to 1525	
6 = Ig2 MA left 814	X50	6 = adds 300	1525 to 1825	75
7 = Ig1 MA right 814	X100	7 = adds 300	1825 to 2125	80
8 = Ig1 MA left 814	X100	8 = adds 300	2125 to 2425	

INFORMATION on operating conditions for the GL814 tubes in the SSB-600 grounded-grid linear amplifier. Loading capacitor data and readings obtained in various metering circuits also are given.

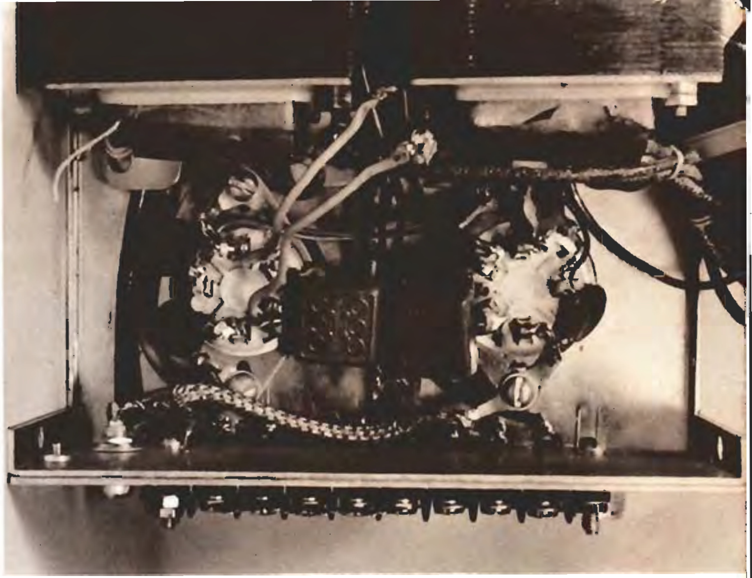

CLOSEUP VIEW of GL-814 tube sockets with filament r.f. choke removed. Shortest leads are used on bypass capacitors on tube sockets. Capacitors in middle are 0.01-mfd. for r.f. input coupling to tube filaments.

SSB-600 (continued from page 5)

peak seen on the scope by comparing the amplitude of the deflections in inches or some arbitrary units. Most scopes have translucent graphs permanently attached to the scope face. If yours does not, then attach a temporary one.

If 10 divisions on the scope face equals the 500-watt output calibration, turn up the gain until 12.2+ divisions of clean output is read. How many peak watts output is it? Remember $\frac{E^2}{R}$=watts output and the "R" in this case is a constant so the E^2 can be related directly to watts. If the first E reading equals 10, the first E^2 equals 100. Therefore, 100—500 watts. If the second E reading equals 12.2+, the second E^2 equals 150 in round numbers. Now by the simple proportion 100:150 equals 500:X, the 12.2+ scope reading represents 750 watts peak. If your scope shows a reading on this arbitrary scale of 14+, it will be indicating a nice 1-kilowatt peak power output. Remember that when using a scope, voltage is being measured. In a given circuit, when the voltage indication doubles, the power has quadrupled. When the power in an antenna is multiplied by four, it equals 6 decibels increase in signal strength, or one big "S" unit.

All things considered, the SSB-600 linear amplifier will do a man-size job if you build it right, tune it right, and most important, operate it right!

Meters having several different full-scale current ranges were tried in this circuit at W2URP. Values of the multiplier resistances required to obtain several popular full-scale voltage readings with meters rated at from 20 to 500 microamperes have been tabulated in TABLE I — METER MULTIPLIER CHART. Multipliers may be assembled from two or more resistances in series to obtain the required total resistance. Five such resistances were used for the multipliers in the model constructed by W2URP.

Precision 1-percent tolerance resistances assure the best accuracy, but inexpensive composition resistors may be combined in series to obtain the correct total resistance. By selecting values carefully, the tolerances in the inexpensive resistors can thus be made to cancel each other out, resulting in a precise total value of resistance.

Shunting resistances will range from a fraction of an ohm, to a few ohms, depending upon the full-scale current range desired. They can be made from either nichrome resistance wire, or copper wire.

The exact value of shunting resistance can be determined by plugging an insulated board into J_3 and J_5, and then connecting a short length of wire between P_3 and P_1. A current of the desired full-scale value is then passed through the meter, and the wire is shortened or lengthened until the meter shows a full-scale reading. Shunts having a few inches of wire may be wound on 47-ohm, 1-watt composition resistors.

CONSTRUCTION DETAILS are shown in the illustrations on this page. The meter cases usually have feedthru insulators already in place. Obtain a case with a hole to fit the size of meter that will be used.

All banana jacks on the rear of the case should be insulated with the fiber washers provided with the jacks. These washers are usually adequate for several hundred volts. Wiring inside the case is run with insulated hookup wire. Standard test prods are connected to J_1 and J_2 on top of the case.

Multipliers are mounted on insulated terminal boards, and fitted with banana plugs spaced to match the multiplier jacks on the meter case.

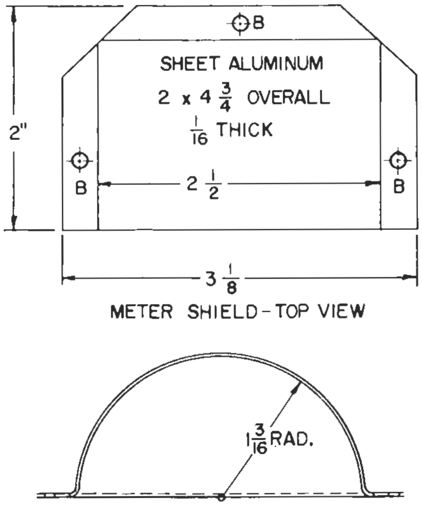

METER SHIELD-TOP VIEW

METER SHIELD - FRONT VIEW

FIG. 4. DETAIL VIEW of the metal shield which goes over the top of the meter to protect it from the plate circuit r.f. field.

A separate multiplier board is required for each voltage range.

The meter is used in the same manner as a regular multimeter. Polarity of the meter must be observed. Before checking an unknown voltage, be sure to plug in a multiplier for a full scale reading higher than the voltage is likely to be. When storing the meter, plug in a low-resistance shunt across the meter.

This simple multimeter will provide measurements of voltage accurate to within a few percent in circuits where the circuit resistance is up to 15 percent of the full-scale resistance of the multimeter. When constructed with a meter having a full-scale sensitivity of 100 microamperes or less, it will provide useful measurements of voltage in receiver and other low-level circuits.

SCANNING THE SPECTRUM

THE EDISON RADIO AMATEUR AWARD

. . . was established in 1952 by the General Electric Company to provide for public recognition of the many outstanding public services performed by radio amateurs. Many such commemorable events go unnoticed each year which otherwise could raise the stature and prestige of all radio amateurs.

The Award is presented annually to a licensed radio amateur who, while pursuing his or her hobby within the limits of the United States, has performed an outstanding meritorious service in behalf of an individual, group, or the general public.

These services range from providing vital emergency communications during emergencies, often in dangerous situations, to organizing compex communications systems, and unique services to an individual.

Candidates for the Award are nominated by letter from individuals, or clubs, associations and other groups familiar with the public service performed by their candidate.

The recipient is selected at the end of January by a panel of distinguished and impartial judges from among candidates nominated by persons familiar with the service each candidate has rendered.

Judging centers on the greatest benefit to an individual, group, or community, and the amount of ingenuity, devotedness and sacrifice the candidates display in performing their services.

The presentation of the Edison Radio Amateur Award trophy and a check for $500 to the recipient is made several weeks later at a ceremony in Washington, D. C., before prominent figures in military, government and civilian communications.

1960 EDISON RADIO AMATEUR AWARD


Ralph E. Thomas, KH6UK


John T. Chambers, W6NLZ

. . . whose trans-Pacific experiments have set distance records and opened new horizons in UHF communications, have been chosen jointly by the Judges to share the 1960 Edison Radio Amateur Award for outstanding service.

This year marks the first time the award has been granted for scientific achievement. Messrs. Thomas and Chambers have devoted four long years to patient and often fruitless experimentation with tropospheric ducting radio propagation phenomena, culminating in a one-way communications distance record of 2,540 miles on the 432 megacycle amateur band.

This and earlier two-way records set over the same California-to-Hawaii path on 220 and 144 megacycles confirmed the theory that UHF radio communications were not limited to line of sight. Their work has stimulated commercial and military interest and experimentation in communication via this phenomena.

The judging panel, in comparing their acomplishments to the first trans-Atlantic radio communications in the 1920's, noted that the work of Messrs. Thomas and Chambers further enhances the standing of amateur radio operators in the scientific world.

Judging the 1960 Edison Award —

E. ROLAND HARRIMAN
Chairman, American National Red Cross.

ROSEL H. HYDE
Commissioner, Federal Communications Commission.

GOODWIN L. DOSLAND
President, American Radio Relay League.

G-E TUBES HAM NEWS

Available FREE from your G-E Tube Distributor

MARCH-APRIL
1961
VOL. 16, No. 2

HAM NEWS
TUBES

MAY-JUNE, 1961

LOW-COST RF WATTMETER

By A. F. Prescott, W8DLD,
and W. C. Louden, W8WFH

THE RF WATTMETER is a highly useful item of test equipment for the amateur radio station, or the "library" of test equipment which many amateur radio clubs maintain. W8DLD and W8WFH give complete construction information here for a unit which offers a choice of meter current ranges.

A recent series of tests on new linear amplifiers for mobile SSB operation created the demand for an RF wattmeter with which to determine their power output capabilities. After running some of these tests with a commercially built wattmeter, it was decided to build a wattmeter, so that it would be available all of the time.

The RF wattmeter is simply an extension of the basic VSWR (voltage standing wave ratio) bridge, such as the Monimatch.[1] Actually, the wattmeter to be described is like having two separate wattmeters in one box, since, in addition to measuring RF watts in the forward direction, it also measures reflected power. It consists primarily of one current transformer and two capacitive voltage dividers, plus two diodes and their filter circuits for the indicating instrument.

Looking into published information on RF wattmeters, an excellent article was found in the April, 1959 issue of *QST*.[2] If this article is really studied, it gives almost the complete story on the subject. However, this article also assumed that the reader would "know all of the tricks" in constructing this type of instrument. Our article gives complete constructional information.

In designing and constructing an RF wattmeter, two important design objectives must be kept in mind in order to achieve an instrument capable of accurate and consistent measurements. These are:

1. The current transformer must be *inductively* coupled to the r.f. transmission line, and not a combination of inductive and capacitive coupling; and
2. The capacitive voltage divider must consist of the ratio of capacitance in the two divider capacitors, and not a conglomeration of stray capacitances, plus some inductive coupling from long leads, and lead dress.

The first objective is accomplished with a simple electrostatic shield in the current transformer which will be described in detail later. The second is realized by selecting miniature components, and placing them in the proper physical locations.

THE CIRCUIT for the complete RF wattmeter is shown in the schematic diagram, Fig. 1. A toriodal type current transformer was designed with an electrostatic shield between the primary (the coaxial cable center conductor running straight through the box) and the secondary (L_2, wound on the toroid form).

In the capacitive voltage dividers (C_1 — C_3, and C_2 — C_4), the smaller capacitances (C_1 and C_2) are adjust-

(continued on page 2)

W8DLD (left) and **W8WFH** put their RF wattmeter through its paces, checking it against the RF wattmeter built into the SSB-600 linear amplifier (center unit). Converted Command set receiver and crystal controlled converter at left of SSB-600 was described in the September-October, 1960 issue of **G-E HAM NEWS.**

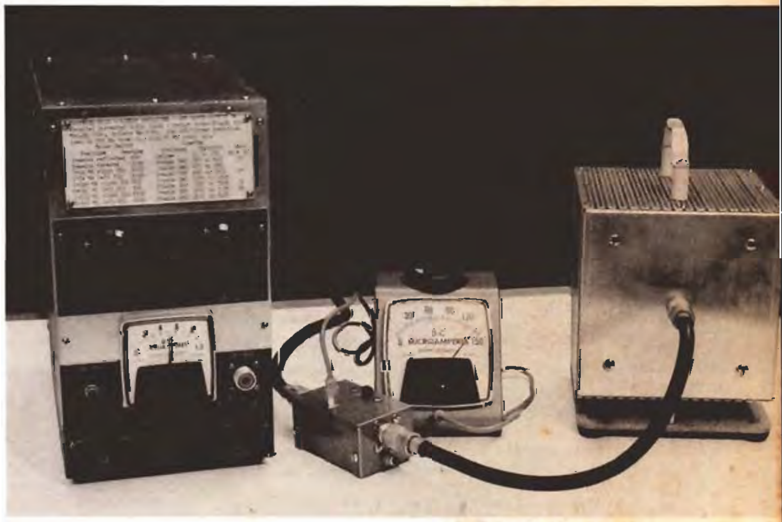

CLOSEUP VIEW of the test setup for the RF wattmeter. Pickup unit is connected into coaxial cable running between SSB-600 amplifier and 500-watt, 50-ohm dummy load (right), which will be described in a coming issue.

IN THIS ISSUE

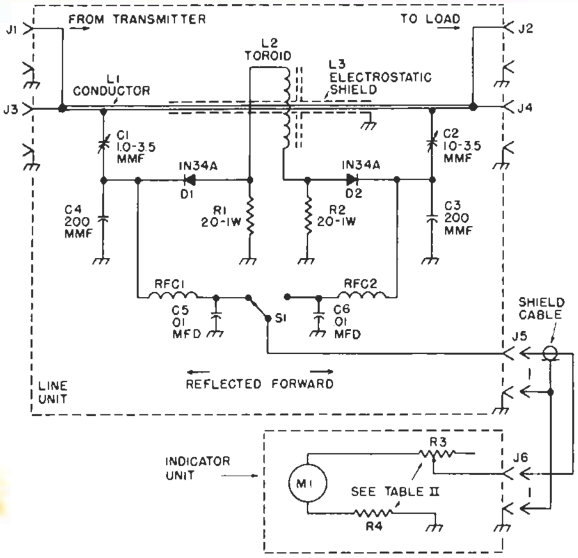

FIG. 1. SCHEMATIC DIAGRAM of the RF wattmeter. Parts with the same function in both sides of the circuit (C_1 and C_2, etc.) should be matched in actual value, as described in the text. This circuit was used in W8DLD's SSB-600 linear amplifier described in the March-April, 1961 issue.

TABLE I — PARTS LIST

C_1, C_2....1.0-3.5 mmf ceramic trimmers (Centralab 820-D, or equivalent).

C_3, C_4....200-mmf 600-volt miniature disc ceramic.

C_5, C_6....01-mfd. 600-volt disc ceramic.

D_1 D_2....general purpose diodes (1N34A, 1N48, etc.).

J_1, J_2, J_5, J_6....midget phono jacks.

J_3, J_4....chassis type coaxial cable jack (SO-239).

L_1......No. 10 or 12 bare copper wire, 3 inches long, covered with $\frac{3}{16}$-inch O.D. copper tubing 1½ inches long.

L_2......Approximately 48 turns of No. 22 enameled wire on toroid form; see footnote (3).

L_3......35 turns, No. 22 enameled wire over L_1; see text for details.

M_1....0 — 150-microampere DC meter; or, see TABLE II for other meter ranges (G. E. DW-91, 2½ inches; DO-91, 3½ inches, or equivalent).

R_1, R_2....20 ohms, 1 watt composition.

R_3.....linear taper potentiometer; see TABLE II for value.

R_4.....1-watt composition resistor; see TABLE II for value.

RFC_1, RFC_2....1 mh single pi-wound RF choke (Miller No. 72F103AP, or equivalent).

S_1.....single pole, double throw slide switch (H. H. Smith No. 516, or equivalent).

MECHANICAL PARTS NEEDED:
Box, wattmeter — Bud Minibox No. CU-2101A.
Box, meter — Bud sloping meter case No. CMA-2065 or CMA-2066.
Dial plate for R_3 — 0-10 markings, 300 degrees, Mallory No. 380.
8-connection terminal strip — Cinch-Jones No. 56A.

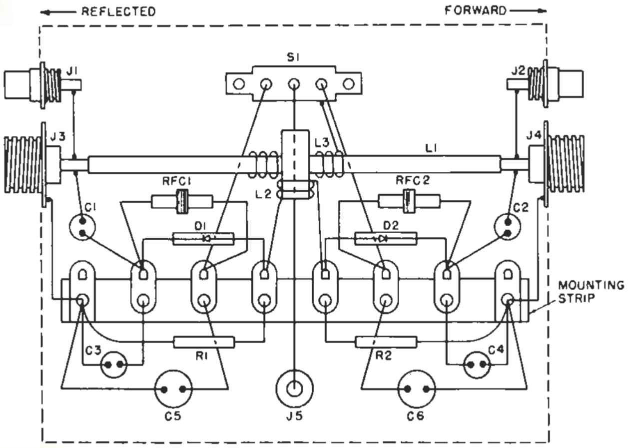

FIG. 2. PARTS LAYOUT for the RF wattmeter. This layout should be followed closely to achieve accurate reflected power readings. NOTE: Either end of the pickup unit may be connected to the transmitter or load, since the circuit is bilateral. The ends have been labelled here for discussion purposes.

LOW-COST RF WATTMETER (continued from page 1)

able. This makes possible physically small fixed larger capacitances for C_3 and C_4 to overcome the problem of stray RF voltage pickup by these capacitors.

It was previously mentioned that this device is really two wattmeters in one case. Obviously this suggests that any time two components with the same value are specified in TABLE I — PARTS LIST they should match each other closely in value. For example, the 20-ohm, 1-watt diode load resistors (R_1 and R_2) may measure from 15 to 30 ohms, but they must both read the same resistance. This also applies to the 200-mmf ceramic capacitors. From 150 to 250 mmf will work fine if the capacitances are matched. Although 1N34A diodes are specified, more important than the type of diode, they should *match* each other in forward and reverse characteristics. This will enable the RF wattmeter to read the same regardless of which direction it is connected in the coaxial line.

The toroid wound current transformer is a problem to shield by any ordinary method, so why not shield the primary of the transformer from its secondary? This is almost quicker done than said! Slip a piece of tubing or put some tape on the center conductor. Wind a tight winding of

HAM
NEWS

presents HOW-TO-DO-IT IDEAS
from the 999 radio amateurs at
GENERAL ELECTRIC

A bi-monthly publication of the RECEIVING TUBE DEPARTMENT
Owensboro, Kentucky, U. S. A. • Editor — E. A. Neal, W4ITC

G-E HAM NEWS is available free from authorized G-E Tube distributors. Some distributors mail copies locally to their customers.

A low-cost direct-mail subscription plan is available to persons residing in the United States and its possessions (including APO and FPO numbers). Subscription rates are:

One Year (6 issues)	$1.00
Two Years (12 issues)	$2.00
Three Years (18 issues)	$3.00
Five Years (30 issues)	$4.00

Enclose check or money order for U. S. currency for the proper amount above made payable to "General Electric Company."

Residents of Canada may subscribe to **G-E HAM NEWS** for $1.00 per year from the Canadian General Electric Company, Ltd., Electronic Tube Marketing Section, 189 Dufferin Street, Toronto 3, Ontario, Canada. Enclose check or money order made payable to: "Canadian General Electric Company, Ltd."

Distribution of **G-E HAM NEWS** in more than 40 foreign countries is handled through the International General Electric Company. A listing of outlets is available from the **G-E HAM NEWS** office. Or, write to: Customer Inquiry Section, International General Electric Company, 150 East 42nd Street, 7th Floor, New York 17, New York, U. S. A.

---

[1] "The Monimatch," by L. G. McCoy, W1ICP, QST, October, 1956, page 11. Also, "The Monimatch — Mark II," L. G. McCoy, QST, February, 1957, page 38.

[2] "An Inside Picture of Directional Wattmeters," by W. B. Bruene, W0TTK, QST, April, 1959, page 24.

[3] Part No. 57-1541, Radio Cores, Inc., 9540 South Tulley, Oak Lawn, Ill.

[4] "Not Just a Novelty," — by Davis A. Helton, W0PME, QST, January, 1961, pages 21 to 25.

TABLE II — METER SELECTION CHART

Minimum Watt Range Desired	Maximum Watt Range Desired	Meter Range	Potentiometer R_3 Ohms
0-3	1000	0-75 ua	*50,000 + R_4 Fixed
0-6	1000	0-150 ua	25,000 + R_4 Fixed
0-12	1000	0-300 ua	15,000
0-25	1000	0-500 ua	7,500
0-50	1000	0-1 MA	4,000

*Zero to three watts range is possible but it would be desirable to use the proper fixed resistance to limit this range for zero to seven and one half watts to go with the full scale marking on a 0 — 75 microammeter. When using this low range R_3 is set at zero resistance and R_4 is chosen to calibrate desired range.

TOP VIEW of the RF pickup unit. Compact size and complete shielding contribute to maintaining 50-ohm impedance through unit, minimizing disturbance in line. Box size is 3¼ x 2⅛ x 1⅝ inches.

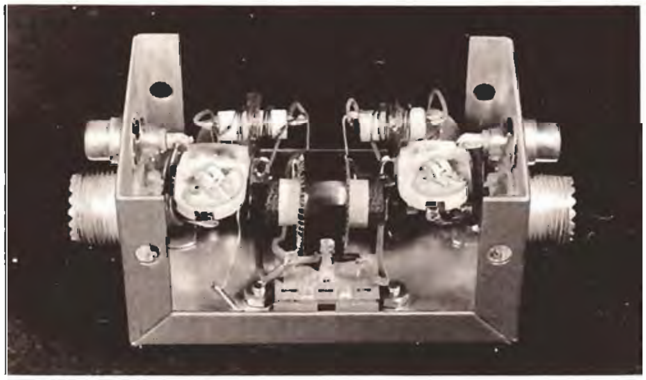

INTERIOR VIEW of the switch side of the pickup unit. Trimmer capacitors C_1 and C_2 are adjusted through ¼-inch diameter holes in the other half of the box, and then plugged with snap-in buttons.

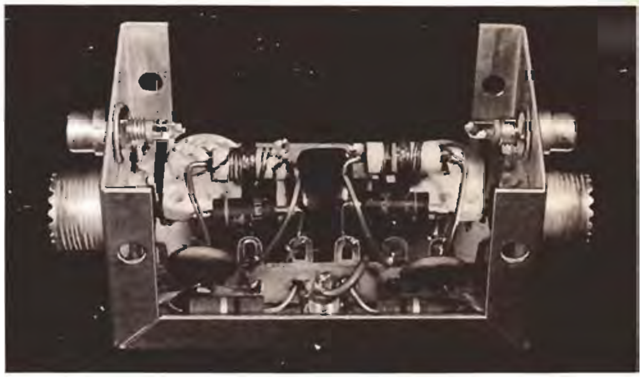

DETAIL VIEW of the terminal strip area of the pickup unit. Parts can be identified from the layout diagram, Fig. 2, which is drawn from the same position as this photo.

enameled wire over the tape. Ground one end of this winding and it forms a good electrostatic shield.

CONSTRUCTION of the RF wattmeter is not difficult, but to assure success, study the parts layout diagram, Fig. 2, and the interior illustrations carefully before starting assembly. Complete the drilling on the part, so put everything in its place please! Complete the drilling on the Minibox and mount the parts in this order: Switch S_1, coaxial cable chassis connectors (J_3 and J_4) and the phono jacks (J_1 and J_2).

Solder a short piece of No. 14 bare copper wire to each center conductor of J_3 and J_4. Connect this wire to the center contact on the adjacent phono jack. The parts mounting strip goes in next, with the outer lugs on each end soldered to an SO-239 connector mounting screw. This grounds the outer two terminals which will later be used as common grounds. This mounting strip may be 1/16″ too long, so file 1/32″ off each end to make it fit inside the Minibox.

Wire the switch and remaining phono jack (J_5) to the proper tie points (these connections are hard to reach later so don't forget). Now mount the two 20 ohm resistors (R_1 and R_2) and two 220 mmf capacitors (C_3 and C_4), followed by the two .01 mfd. bypass capacitors (C_5 and C_6). The IN34A diodes now go in, keeping their leads short. Hold each lead with longnose pliers, to act as a heat sink, while soldering. Put in the two RF chokes (RFC_1 and RFC_2) and the main work is done.

The current transformer should be built as a subassembly which will literally fall in place with five connections to be soldered. Here's how it is done: Cut to the exact length a piece of No. 10 or 12 copper wire that will connect the two center conductors in the SO-239 coaxial cable connectors. This wire is used to mount the entire transformer assembly, and forms the primary of the current transformer. This model has a piece of copper tubing 3/16″ I.D. x 1½″ long slipped over the No. 10 wire and soldered.

Then put on a layer of spaghetti tubing and wind the electrostatic shield (L_3). Put on more than 35 turns so it can later be pruned to length, and dope the wire with radio cement. When dry, adjust the turns to approximately 35 and clean one end of the wire. Cut off the other wire close to the coil. The cleaned wire will later be tied to ground.

A commercially available form[3] for the toroid coil (L_2) can be used; or, a suitable toroid form can be made from the iron tuning slug inside the amplifier plate coil in the Command Set transmitters, as described by W0PME in *QST*.[1]

Wind the toroid with a full winding, dope with radio cement, and allow to dry. Leave 1-inch leads on this coil for connections and clean the leads at this time. Wind enough tape over center of the shield winding so that the toroid fits snugly at the center of the shield. Cement the toroid in place and, when dry, solder this assembly in place.

Construct the indicator unit, using the desired range of meter and power level potentiometer shown in TABLE II — METER SELECTION CHART. A sloping front meter case (*Bud* CMA-2066, or equivalent) was used on the model pictured.

ADJUSTMENT of the completed RF wattmeter is simple, once the wiring has been given a final check. The test setup, pictured in the view on page 1, shows the RF power source, line pickup unit, indicator unit, and 50-ohm dummy antenna load. RG-8/U or other 50-ohm coaxial cable should be used for interconnections between units. Sufficient RF power output to give a full-scale forward reading for the meter range selected, should be available.

Set switch S_1 toward the load, set R_3 at maximum resistance, turn on the transmitter and tune it for opti-

(continued on page 6)

HAM NEWS

TWO-TUBE DIFFERENTIAL KEYER

By S. E. Johnson, Jr., W2FBS

A GOOD-SOUNDING CW SIGNAL usually results from a transmitter keying system that applies and removes the keying voltages with a smooth waveform, without sharp peaks that can result in key clicks and thumps; or chirps from too-slow application of these keying voltages.

W2FBS describes here a vacuum-tube screen grid keying system that will key tetrode or pentode power amplifier stages in 20 to 300-watt transmitters. It will provide the following functions:

1. Keyed screen grid voltage for a power amplifier, with adjustable keying waveform;
2. Negative screen grid voltage when the key is open to cut off amplifier plate current;
3. Adjustment of screen voltage to the power amplifier to set the r.f. power output of that stage to the optimum level;
4. Negative blocking bias voltage with which to cut off an oscillator or mixer when the screen grid keying function is idle;
5. Adjustable negative bias voltage for the r.f. power amplifier.

This keyer contains a series screen voltage keyer tube, a control triode tube for the keyer tube, a diode-connected tube section to apply the blocking bias, and a 200-volt negative bias power supply.

Function of the keyer timewise is shown in the waveform chart, Fig. 1. When keying starts, screen voltage rises from a negative value to the operating value for the amplifier tube each time the key is pressed. The negative blocking bias on the oscillator or mixer grid is removed at the instant the key is pressed, and remains off until keying stops. The blocking bias then returns gradually, cutting off the oscillator or mixer shortly after keying of the amplifier screen grid stops. The oscillator or mixer thus will continue to operate during normal sending, but stops when the operator stops sending briefly to listen for incoming signals.

A 6BL7-GT TWIN TRIODE is the screen grid keyer tube as shown in the schematic diagram, Fig. 2. Both sections are connected in parallel, thus reducing its internal resistance to less than 1,000 ohms at zero control grid bias. The screen voltage of one, two or three small transmitting pentode tubes (807, 1625, 6146, 6L6-GC, 7581, GL-829B, etc.) thus can be controlled. Screen grid current flows from the cathode to screen grid of this amplifier tube, then to the cathode of the keyer tube, through this tube to the plate, and to the high voltage supply of 400 volts.

Section one of a 12AU7-A twin triode serves as a control tube for the grid bias voltage applied to the 6BL7-GT. With the key open, grid pin 7 has minus 90 volts applied, but the cathode, pin 8, is at minus 110 volts. This 12AU7-A section thus draws plate current through the 100,000-ohm resistor and potentiometer, R_1. This holds the control grid in the 6BL7-GT sufficiently negative with respect to its cathode, so that no plate current (and r.f. amplifier screen grid current) flows.

About minus 100 volts is applied to the amplifier screen grid from the keyer bias supply through the 47,000-ohm, 2-watt resistor. At the same time, a minus 100 volts is applied to the oscillator or mixer control grid through the diode-connected section two of the 12AU7-A triode.

When the key is closed, cathode pin 8 of the 12AU7-A is grounded, and the minus 90 volts on control grid pin 7 cuts off plate current flow through this section. This causes the plate, pin 6, of this 12AU7-A section, and the control grids of the 6BL7-GT, pins 1 and 4, to rise to a positive voltage determined by the setting of R_3, the "Amplifier Screen Voltage Control." The 6BL7-GT then conducts, and the cathodes, pins 3 and 6, rise to a positive value approaching the positive voltage applied to pins 1 and 4.

Since closing the key also removes the negative voltage from the plate (pin 1) of the diode-connected 12AU7-A section, negative blocking bias no longer is presented to the grid circuit of the oscillator or mixer in the transmitter and it can operate. Capacitor C_4 in the cathode of the 12AU7-A diode-connected section prevents this bias from reappearing during the brief intervals the key is open between characters. But C_4 charges through R_4 and the blocking bias to returns in from ½ to 1½ seconds after keying stops.

The setting of potentiometer R_3 adjusts the positive voltage applied to the control grids of the 6BL7-GT, and thus the voltage drop through it. This permits setting the screen voltage applied to the r.f. power amplifier tube (or tubes), when the key is closed, to the positive value which results in the desired r.f. power output. This feature is most helpful when only a portion of the normal power output of the trans-

TOP VIEW showing keyer constructed by W2FBS in a Minibox. Heater voltage for the 6BL7-GT in this model was obtained from one of two 6.3-volt windings on filament transformer T_1, with 6.3 volts fed into other winding. Only 6 terminals were thus needed on strip TS_1 for external connections.

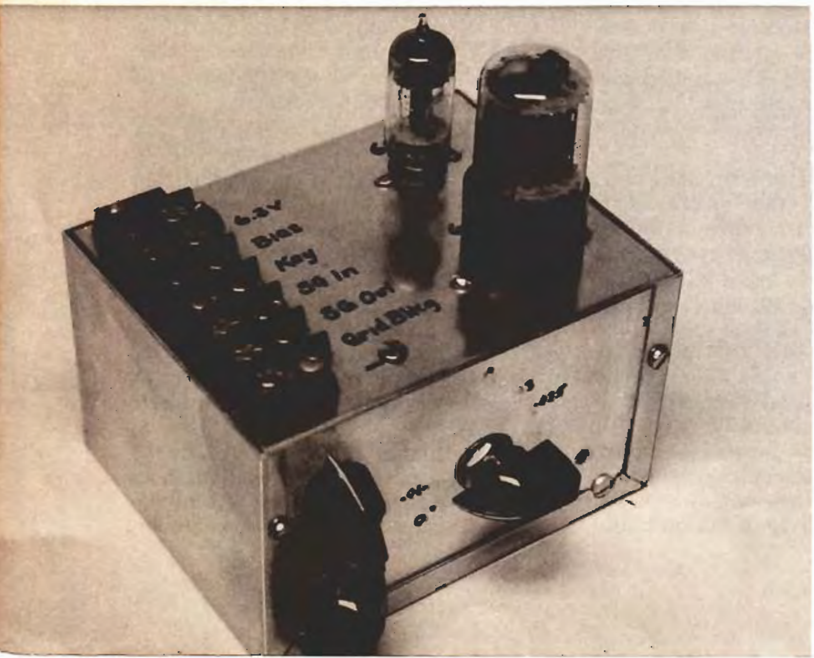

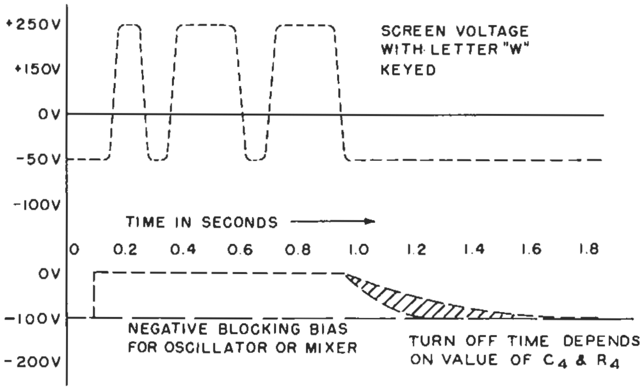

FIG. 1. **WAVEFORM GRAPH** showing (top) the screen voltage applied to the transmitter power amplifier when the letter "W" is keyed. Peak voltage will be from plus 25 to 300 volts, depending upon setting of R_3. Bottom graph shows sharp rise of negative blocking voltage for oscillator or mixer control grid from minus 100 to 0 volts, and slow decrease back to minus 100 volts after keying is stopped.

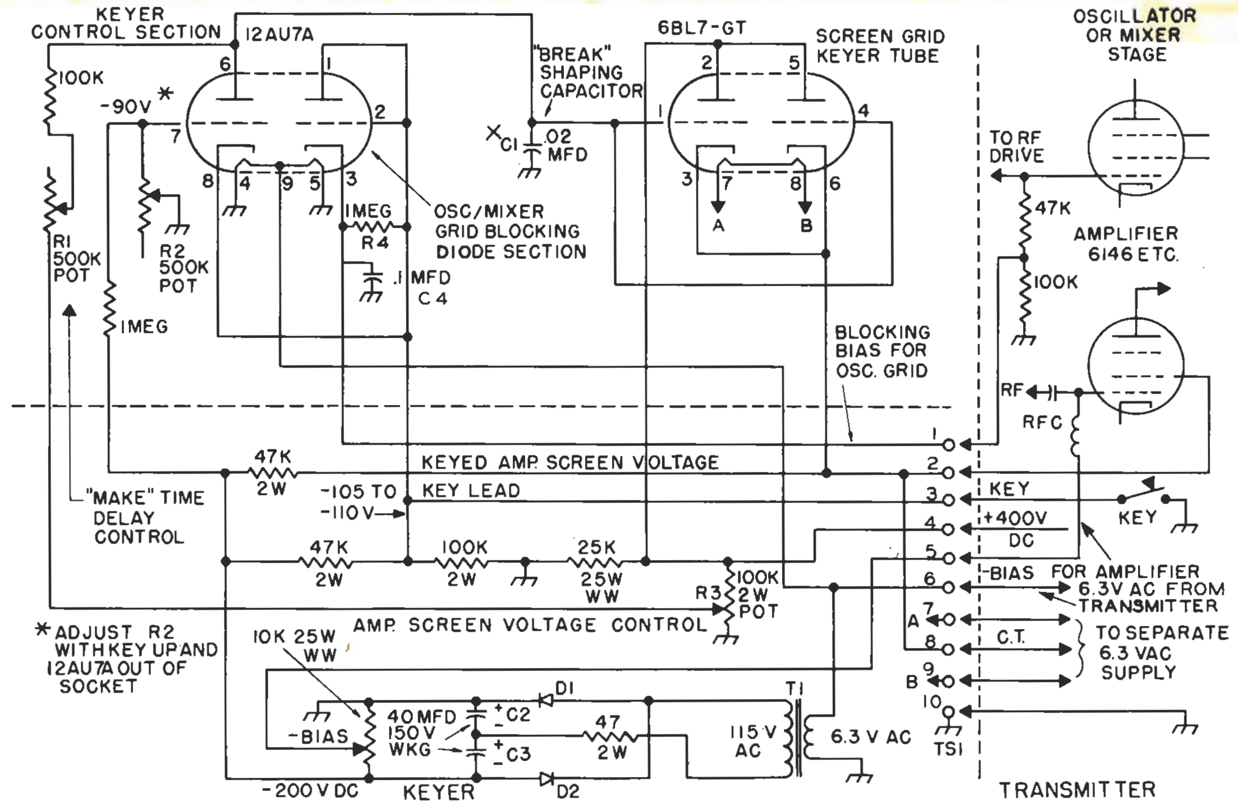

TABLE I — PARTS LIST DIFFERENTIAL KEYER

C_1.....Paper capacitor, .02 mfd, 400 V. DC working (try values from .01 to .05 mfd for fast or slow "break" in keying).
C_2, C_3....40 mfd, 150-volt working electrolytic capacitors.
C_4.....0.1-mfd, 400-volt paper, see text.
D_1, D_2....Selenium, Germanium or silicon diode recitfiers, 380-volt peak inverse rating, 50 milliampere DC current rating.
R_1, R_2....500,000-ohm, 2-watt potentiometer.
R_3......100,000 ohm, 2-watt potentiometer.
R_4......1 megohm, ½ watt, see text.
T_1......6.3-volt, 1 ampere filament transformer, 115-volt Primary (Thardarson T-21F08 or equivalent).

FIG. 2. SCHEMATIC DIAGRAM of complete keyer. Connections to typical oscillator or mixer control grid, negative bias for power amplifier control grid, and keyed screen grid voltage for power amplifier, are shown at right side of diagram. All resistances are in ohms, ½-watt rating, unless otherwise specified. All capacitances are in microfarads.

NOTE: A tap switch with several positions and a set of paper capacitors from .01 to .05 microfarads, can be inserted at point "X" in place of C_1. This provides adjustable sharpness of "break" characteristic of keyer.

mitter or exciter being controlled with this keyer is needed to drive a large r.f. power amplifier.

The rise of the amplifier screen grid voltage is delayed by C_1 charg- exponentially through R_1 and the 100,000 ohm resistor. The sharpness of the keying on the front of the keying characters is thus adjusted by the setting of R_1. Increased resistance increases the rise time and softens the keying.

The value of C_1 also shapes the tail of each keying character; more capacitance here softens the "break." Several values of capacitance can be cut in by a tap switch at this point to provide easy adjustment of both "make" and "break." Either a set of capacitors ranging from .01 to .05 microfarads, in steps of .005 microfarads; or, several .005 microfarad capacitors can be added to the circuit with a progressive shorting switch.

Negative bias for the keyer and r.f. amplifier is provided by connecting a 6.3-volt filament transformer (T_1) to the 6.3 volt supply for the 12AU7-A tube, and rectifying the 115-volt winding output. A voltage doubler provides about minus 200 volts bias. A lower bias voltage for the r.f. amplifier is obtained from the voltage divider. The 6BL7-GT keyer tube should be run from a separate 6.3-volt AC source, with the center tap connected to the amplifier screen voltage lead to keep the heater-cathode voltage of the 6BL7-GT within its rating.

CONSTRUCTION of W2FBS's keyer is in a 4 x 5 x 3-inch Minibox (*Bud* CU-3005, or *Premier* MC-1005). All parts except the terminal strip and tubes are inside the box, as shown in the photo on this page. Controls were mounted on one side, and the bias transformer was mounted inside on the opposite wall. This model has the tap switch added to select different values of C_1 for soft or sharp "break" characteristics.

W2FBS has constructed another model of this keyer for the hetrodyne exciter in his transmitter. All parts above the horizontal dotted line in the schematic diagram, Fig. 2, are inside a 2¼ x 2¼ x 5-inch Minibox (*Bud* CU-3004). The box is mounted on the main chassis of the exciter, with the other keyer parts located inside the main chassis below the Minibox. This complete exciter will be described in the July-August, 1961 (Vol. 16, No. 4) issue of *G-E HAM NEWS*.

ADJUSTMENT, after a check of the wiring, is simply a matter of applying 6.3 volts AC and measuring the output of the bias supply. With the 12AU7-A tube out of the socket and

(continued on page 6)

MODERN HETRODYNE EXCITER in W2FBS's attractive station console has the two-tube differential keyer unit built right into it. Exciter will be described in the July-August, 1961 issue. In addtion to four one-kilowatt power amplifiers for the DX bands, the station also has a **PI-NETWORK ANTENNA TUNER** at right (see G-E HAM NEWS, May-June, 1960, page 3). World map in background contains 260-odd pins representing the present DXCC score on CW at W2FBS.

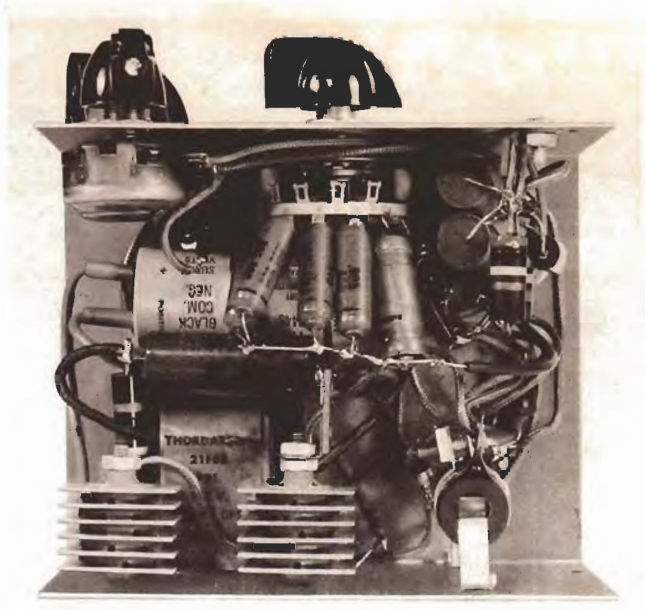

BOTTOM VIEW showing locations of major components: T_1, D_1 and D_2, and the bias voltage divider on rear wall; potentiometers R_1 and R_2, and tap switch for selecting different values of capacitance for C_2 on front wall; and other components in middle of Minibox type chassis.

TWO-TUBE DIFFERENTIAL KEYER

(continued from page 5)

the key open, adjust R_2 until minus 80 to 90 volts is measured at grid pin 7 of this socket. Use a voltmeter with a resistance of at least 5 megohms (scale of 250 volts or higher on a 20,000-ohm per volt meter, or vacuum tube voltmeter.

Plug in the 12AU7-A and 6BL7-GT tubes and, with the key still open, minus 105 to 110 volts should be read at cathode pin 3 on the 12AU7-A socket. The screen voltage to the power amplifier should be about minus 50 volts with the key open. With the keyer connected to the amplifier screen grid circuit in the transmitter (or with a 10,000-ohm, 10-watt resistor from the screen grid voltage terminal to ground), check the screen voltage with key up and key down. Adjust R_3 over its range with the key closed, and a screen voltage from about plus 25 to 300 volts should be read.

This keyer can be built into an existing exciter if desired. It is ideal for replacing less satisfactory keying systems in transmitters in the 20 to 300-watt power input class. A keyer of this type has been operated with excellent results on the 150-watt SINGLE BANDER transmitter models (See *G-E HAM NEWS*, November-December, 1957; and January-February, 1958, Vols. 12, No. 6, and 13, No. 1 issues).

If you've been having keying problems — chirps, clicks, thumps, backwave, etc. — try this easy-to-construct packaged keyer unit in your transmitter. Or, add it in place of a less satisfactory keying system for improved CW performance. The 6BL7-GT twin triode will pass sufficient current to key the screen grid voltage of two, three, or even four transmitter stages which require about the same screen grid voltage.

LOW-COST RF WATTMETER

(continued from page 3)

mum power output. Then set R_3 for full-scale deflection of the meter. Throw S_1 toward the RF source to read reflected power. Adjust capacitor C_1 until a definite null is observed on the meter. A false null may be indicated at minimum capacitance, so check C_1 to see that the null occurs with C_1 at greater than minimum capacitance.

Reverse the connections to the wattmeter and repeat the adjustment just described with C_2. This will set the reflected power null for the other half of the instrument. Run through it a couple of times to be sure of the settings. A carefully built wattmeter will show almost true zero reflected for a full scale forward reading. This assumes that a 50-ohm non-reactive load and 50-ohm coaxial cable are used.

ACCURATE CALIBRATION of the RF wattmeter is not difficult, even though the authors were able to check their results against a commercially made RF wattmeter. If a good 50-ohm dummy load with low reactance is available, an RF ammeter and Ohms Law can be used to calibrate the RF wattmeter. Either a 0 — 1 (for transmitters with up to 50 watts output), 0 — 3 (for up to 450 watts), 0 — 4 (for up to 800 watts) or 0 — 5-ampere (for up to 1,250 watts) RF ammeter can be used.

There is a trick to connecting an RF ammeter into a coaxial cable. Be careful not to disturb the 50-ohm surge impedance and this takes a bit of doing! For frequencies in the range of 3-30 megacycles a wide strip of thin copper sheet or flat copper braid can be used to connect the outside braid together at the point where you open the cable to insert the meter. Insulate the meter terminals with tape and then bend the copper strip tight against the terminals and meter case. The thermocouple is usually between the two meter terminals just inside the case, so bending the copper strip tight against the case helps preserve the 50-ohm configuration. The acid test is to insert the meter in a line and see if the VSWR changes noticeably.

If you are suspicious of the accuracy of any RF ammeter used to calibrate the RF wattmeter, check the result as follows: Measure the true input to the RF amplifier connected to the load; be sure to check the plate current and plate voltage. From these figures calculate the DC watts input. If possible operate the amplifier under Class C conditions. Be sure the coupling is adjusted for maximum efficiency. Assume 70% efficiency when the foregoing conditions have been met. If the watts (I^2R) in the load check about 70% of the DC input, the cross check is reasonably close.

Other methods of calibration are also practical. Calibrate an oscilloscope from a 60 cycle AC voltage fed directly into the deflection plates. Then use it to measure the RF voltage across the 50-ohm dummy load. Use the measured voltage in the formula $\frac{E^2}{R} = W$ to find the RF output in watts. A VTVM with an RF probe, if its calibration is checked, can also be used in the same manner. Try checking power output several ways and take an average of the readings.

A good frequency to use for calibrating the RF wattmeter is 14 megacycles. It will probably then read 5% low on 4 megacycles and 5% high on 28 megacycles.

The calibration curves are attached to the back of the meter case and covered by a piece of $\frac{1}{16}$" thick lucite sheet. The two curves can be drawn in different colors or in different type lines, as shown in the sample chart, Fig. 3. The dashed curve reads 0 to 15 watts. Set R_3 at *zero* resistance for this range. Read the actual meter deflection and then find this reading on the curve, move over to the other axis and read the power output in watts. The solid curve is the 15 to 1000-watt range. Always set R_3 for a full scale reading and accurately note the dial reading on R_3. Use this figure to read watts from the 15 to 1000 watt scale on the calibration chart.

One word of caution: Always set R_3 fully clockwise, which automatically puts it on the highest range, when it is connected to an amplifier of unknown output. Obviously R_3 can be set for 500 watts ahead of time if the power output is known to be less than 500 watts. This device will stand a 100% overload for a few minutes, but don't be the first to prove this statement.

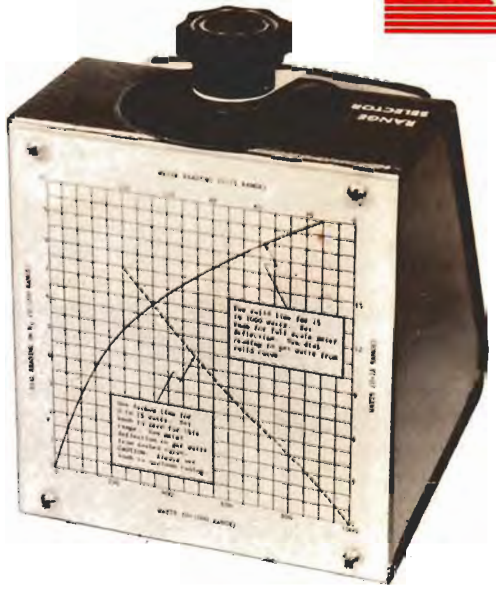

REAR VIEW of the indicator unit, showing the calibration curves fastened to the box and covered with $\frac{1}{16}$-inch thick clear plastic. Curve is shown in Fig. 3.

When constructed as described, we're sure you'll find the Low-Cost RF Wattmeter an almost essential addition to your amateur radio station. In fact, you're likely to wonder how you ever got along without it.

FIG. 3. CALIBRATION CHART for the wattmeter described, for use with a 0 — 150-microampere meter (G. E. type DO-91) and 25,000-ohm potentiometer at R_3. The solid line and figures at the left and bottom are for 15 to 1,000 watts; the dashed line and figures at the top and right are for the 0 to 15-watt range. Chart is shown actual size, so that it may be cut out and fastened to rear of meter box.

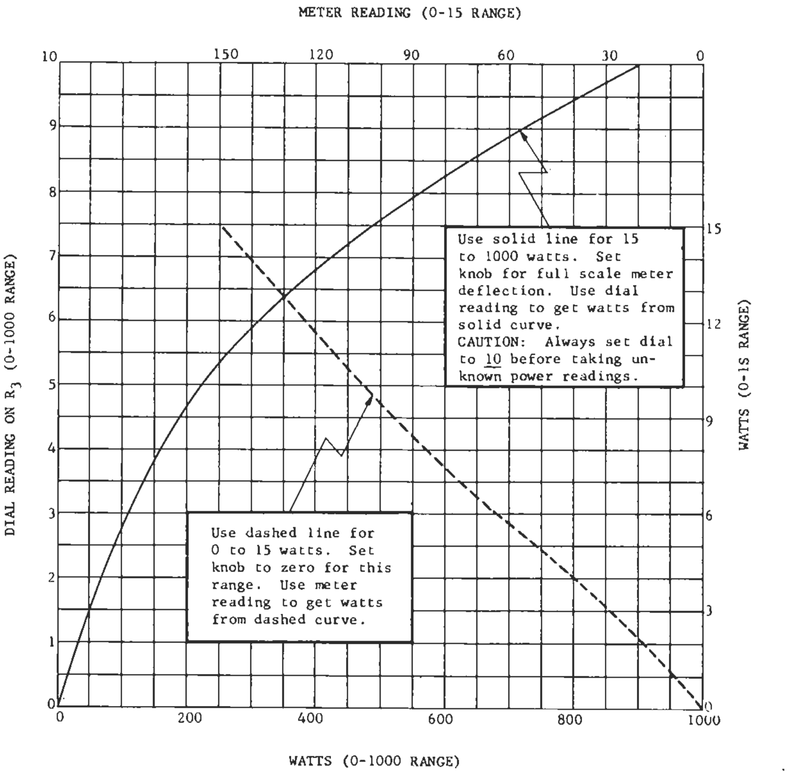

Use solid line for 15 to 1000 watts. Set knob for full scale meter deflection. Use dial reading to get watts from solid curve.
CAUTION: Always set dial to 10 before taking unknown power readings.

Use dashed line for 0 to 15 watts. Set knob to zero for this range. Use meter reading to get watts from dashed curve.

SCANNING THE SPECTRUM

NEW G. E. "PACER" TWO-WAY RADIO FEATURES SIMPLIFIED TUBE CIRCUITS, 15-WATT OUTPUT, LOW BATTERY DRAIN

GENERAL ELECTRIC has engineered a new line of low-priced, lightweight, compact, two-way radios using vacuum tubes and simplified circuits to achieve lower battery drain than previously attained in tube-type equipment. Radio amateurs will find the new "PACER" a veritable "gold mine" of features.

The new G. E. "PACER" line has models covering both the low band (25–50 Mc.) and high band (150–174 Mc.). Smallest in G. E.'s entire line of two-way radios, the 15-tube unit has a panel only 4¼ x 7¾ inches, and is 12½ inches deep, a total of only 412 cubic inches. However, the cabinet provides ample space for optional accessories — two-channel operation, and G. E.'s "Channel Guard" device to protect against interference.

The miniaturized unit was designed to fit under the dash of even new compact cars without cramping passengers. Lightweight aluminum construction has reduced weight to only 10 pounds, including a newly designed microphone and elliptical speaker built into front of the unit.

The G. E. "Pacer" is completely American made and features the new General Electric line of 13.6-volt heater communication tubes in the 7000 series. A power pentode–high gain triode tube serves as microphone preamplifier and limiter for the transmitter, and as noise amplifier and audio output in the receiver.

One-case construction and universal mounting brackets simplify installation. A drawer-type pull-out chassis eases servicing and routine maintenance. Only one relay is used in the entire unit. There are plug-in connections to circuit boards, and plug in 0–3 volt DC metering for all critical circuits.

Look over the new G. E. "Pacer" two-way radio. You'll find it a prime example of how your new mobile should be built.

"KING-SIZE" COMMENTS —

Yes, we've received considerable "fan mail" on our increasing the page size of *G-E HAM NEWS* up to 8½ x 11 inches this year, and 99.9 percent of it has been favorable. Most readers like the larger size of diagrams and photos. I'm also sure you'll like the additional articles we have room for, such as the LOW-COST RF WATTMETER and TWO-TUBE DIFFERENTIAL KEYER articles in this issue. Either of these would have occupied nearly an entire issue in the smaller page size.

OMNIVOX PATCH TRANSFORMERS

Again from the mail basket, readers have asked some questions about the transformers used in the phone patch section of the OMNIVOX (See *G-E HAM NEWS*, January-February, 1961, page 1). The winding on T_2 marked as 1,200 ohms in the schematic diagram, Fig. 1, page 3, actually has a 4,000-ohm impedance. However, this winding is loaded by R_{37} (1,000 ohms), in combination with the primary load through R_{25} (470 ohms) and R_{26} (1,000-ohm potentiometer), and thus provides a good impedance match to the average phone line.

This 4,000-ohm winding is terminals 1 and 3 on the T_2 transformer obtained from the Signal Corps RM-52 Remote Control Unit. Although the RM-52 has been advertised by a number of surplus outlets, I notice that it has been listed regularly in flyers from Fair Radio Sales Co., P. O. Box 1105, Lima, Ohio, both as "used" and "new."

The following is a bibliography of articles that author W4PFQ referred to in designing his OMNIVOX.

BIBLIOGRAPHY OF ARTICLES ON VOX AND PHONE PATCH CIRCUITS

"Audio Preamplifier/Limiter/Patch," by R. V. Kinney, G-E HAM NEWS, November-December, 1958, Page 6.

"The Patchmaster," by J. J. O'Brien, CQ, December, 1958, Page 32.

"Sure-Fire Voice Break-In," by James L. Tonne, CQ, June, 1958, Page 38.

"Hybrid Husbandry," by Sidney S. Rexford, CQ, November, 1957, Page 52.

"The Macy's Special Patch," by Will A. Connelly, CQ, October, 1958, Page 46.

"Audio Peak Limiting," by Howard S. Holzer, CQ, February, 1960, Page 48.

HAM NEWS

Available **FREE** from your G-E Tube Distributor

MAY-JUNE
1961
VOL. 16 NO. 3

G-E TUBES

HAM NEWS

JULY-AUGUST, 1961

MODERN HET'RODYNE EXCITER

By S. E. Johnson, Jr., W2FBS

COMPLETE CONSTRUCTION INFORMATION on a modern hetrodyne-type transmitter exciter covering 3.5 to 30 megacycles is given in this feature article by a well-known G-E HAM NEWS *author. The exciter as described has been designed especially for CW operation, but the circuit is easily adapted to single sideband operation with the addition of a direct-frequency-type SSB generator.*

DESIGN OF AMATEUR TRANSMITTERS has changed rapidly during the past few years. The hetrodyne principle — featured in better communications receivers for thirty years — is now found in many advanced-design transmitters as well. The result has been new standards of performance at no increase in complexity over older transmitters of several years ago.

The advantages of the hetrodyne-type exciter have been well demonstrated in the many commercially made SSB transmitters on the market. However, the many new features in these equipments create an aura of greater complexity. But the basic hetrodyne-type RF circuit need not be complex; it compares favorably with multiplier-type exciters that are well designed to achieve reasonable frequency stability.

The lineup of a typical multiplier-type exciter is shown in the simplified block diagram of Fig. 1. Note that it has six stages, including isolating stages for the oscillator, frequency multipliers, and power amplifier. The isolation is needed to prevent reaction of the following stages on the oscillator frequency during keying or modulation. Frequency multipliers are needed to place the oscillator at a fraction of the output frequency. Six bandswitch sections are needed to cut the multiplier stages in and out, as well as change coils. The oscillator frequency determining constants also must be switched to provide full dial coverage on all bands.

The hetrodyne exciter, as shown in the simplified block diagram of Fig. 2, has two oscillators, one tunable and covering a single frequency range, and a crystal oscillator on a different frequency for each band. Since neither oscillator frequency is usually harmonically related to the exciter output frequency, they both can operate continuously without putting annoying signals into the station receiver.

The sum or difference of these two oscillator signal frequencies then becomes a third signal in the mixer stage,

(continued on page 2)

W2FBS TUNES THE POWER AMPLIFIER on his hetrodyne exciter before going after another "rare one." A confirmed DX-er for many years, W2FBS (Sam) is continuously improving his fine station layout and equipment. Map at upper right has pins indicating the 270-odd countries contacted by W2FBS for DX Century Club credit. Trophies at upper left attest to his bowling prowess. Four separate one-kilowatt power amplifiers, and their power supplies, are housed in two cabinets out of sight at left. Indicator above exciter shows heading of 3-element wide-spaced beam for 14 megacycles.

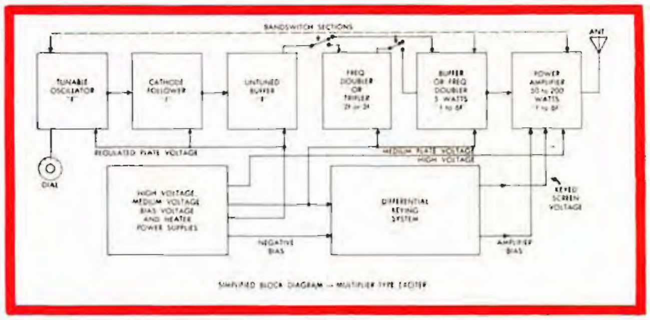

FIG. 1. SIMPLIFIED BLOCK DIAGRAM of a typical bandswitching multiplier-type amateur transmitter/exciter unit. In addition to bandswitches for the coils to cover different bands, switch sections usually are required to change the oscillator frequency coverage for full-dial tuning of each band; and to insert or remove frequency multiplier stages into or out of the circuit, as required.

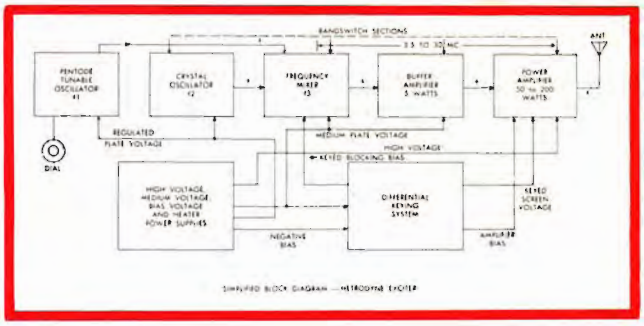

FIG. 2. HETRODYNE-TYPE EXCITER block diagram with tunable oscillator covering a single range, and crystal oscillator both driving mixer stage from which either sum or difference of two mixer input signals is derived in output. Tuning rate of dial is same on all bands.

IN THIS ISSUE

TABLE I — EXCITER COMPARISON CHART

FEATURE	HETRODYNE EXCITER	MULTIPLIER-TYPE EXCITER
OSCILLATOR TUNING RATE	Same Tuning rate on all bands (Kc. per revolution of Tuning Knob).	Tuning rate increases with order of frequency multiplication between oscillator and output frequencies.
TUNABLE OSCILLATOR FREQUENCY DRIFT	Same drift in Kc. on all bands.	Drift increases with order of frequency multiplication (often 8 times higher on 28 Mc. than on 3.5 Mc.).
DIAL CALIBRATION	Good reset accuracy on all bands because of constant tuning rate.	Reset accuracy in Kc. decreases with order of frequency multiplication on higher frequency bands.
ADAPTABILITY TO SSB OPERATION	Excellent—SSB generator can be placed on single fixed frequency for operation on all bands.	SSB generator must be bandswitched to the output frequency, requiring readjustment with each band change.
CHIRPLESS KEYING ON CW	Excellent—Both oscillators can run continuously, and mixer and following stages can be keyed.	Oscillator usually must be keyed for break-in operation, making chirps hard to eliminate. Or, oscillator must have complex shielding to reduce signal in station receiver during break-in keying.
SPURIOUS SIGNAL OUTPUT	Crystal and tunable oscillator frequencies must be chosen carefully to avoid "birdies" in output signal from exciter, resulting from harmonics of oscillators crossing output frequency of exciter.	Harmonics of oscillator can be radiated through mis-tuning of frequency multiplier stages. Harmonics of oscillator are at output frequency and cannot cause "Birdie" problem.

FRONT PANEL VIEW of the hetrodyne exciter. Pilot lamps have since been moved to left side of panel to make room for "zero-in" pushbutton switch and signal level control below tuning dial. Another good quality type of dial also can be used on the exciter, if available, such as the Eddystone type 898 dial.

(continued from page 1)

this third signal being the exciter output frequency. Simple amplifying stages then build up the level of this signal to the desired output power.

The principal precaution that must be taken in the design of a hetrodyne exciter is to select frequencies — or frequency ranges — for both oscillators so that low-order harmonics (2nd, 3rd, 4th, 5th, 6th and 7th) from either one do not cross output frequency. These considerations were explained in detail in a previous issue of *G-E HAM NEWS.*[1]

A comparison of the principal features, advantages, and disadvantages of both multiplier and hetrodyne-type exciters has been compiled in TABLE I, which gives information that could take several columns of text to cover.

CIRCUITRY IN W2FBS's exciter is straightforward, with no trick circuits. Starting with the tunable oscillator, as shown in the schematic diagram, Fig. 3, the high-C Colpitts circuit was chosen. A detailed description of this oscillator was given in a previous issue of *G-E HAM NEWS.*[2] Component values were chosen to cover 6.0 to 6.25 megacycles in the grid circuit, and 12.0 to 12.5 in the plate circuit, tuned to the second harmonic. Parts are coded with the last digit the same as in the original article.

The crystal oscillator is a simple triode, with appropriate crystals switched into the grid circuit, and tuned circuits for each crystal in the plate circuit. An untuned type crystal oscillator also could be used, such as those recommended by several crystal manufacturers for their fundamental type crystals. This would eliminate four coils (L_1 to L_4) and one section of the bandswitch (S_{1B}).

Four positions of the main crystal selector section of the bandswitch (S_{1A}) select proper crystals for 3.5 to 21.45-megacycle coverage. The "28" megacycle position of S_{1A} connects a second crystal switch which selects any of the four crystals required for complete coverage of the 28 to 29.7-megacycle band.

Both oscillators are lightly coupled (through 10-mmf. capacitors) to the control grid of a 12BY7-A high-transconductance pentode which serves as the mixer stage. The small coupling capacitors prevent overdriving the mixer stage and reduce the generation of harmonics of either oscillator in the mixer output. Five separate bandpass type L/C tuned circuits (L_7 and C_3), one for each band from 3.5 to 28 megacycles, select the sum or difference frequencies in the mixer plate circuit. The tabulation in TABLE III — COIL TABLE AND ALIGNMENT CHART shows how the two oscillator frequencies become the output frequency for each band.

A second 12BY7-A pentode operates as an intermediate class A amplifier, building up the mixer output signal to sufficient power to drive the power amplifier stage. Bandpass tuned circuits (L_8 and C_4) similar to those in the mixer plate circuit are also in this stage. Specifications for these coils are in TABLE III — COIL TABLE. A detailed connection diagram of these coils is shown in Fig. 4.

The G. E. type 6146 beam pentode is recommended for the power amplifier stage. However, W2FBS has been operating experimentally a G. E. type 7581 beam power pentode in his model with excellent results; thus the text refers to the 7581. It is similar to the popular 6L6-GC audio power pentode and has a low-loss micanol base. While the 7581 is not specifically rated for RF service, it operates with voltages and currents normally applied to the similar 807, but with a maximum of 500 plate volts. No neutralization was necessary in this circuit for either the 6146 or 7581.

The amplifier plate tuned circuit is commercially made, a Harrington GP-50 multi-band circuit. It has two coils, one (L_{10}) covering 3.5 and 7 megacycles, and the other (L_9) for 14, 21 and 28 megacycles, selected by a section of the bandswitch (S_{1F}). Output link coils

HAM NEWS
TUBES

presents HOW-TO-DO-IT IDEAS
from the 999 radio amateurs at
GENERAL ELECTRIC

A bi-monthly publication of the RECEIVING TUBE DEPARTMENT
Owensboro, Kentucky, U. S. A. • Editor — E. A. Neal, W4ITC

G-E HAM NEWS is available free from authorized G-E Tube distributors. Some distributors mail copies locally to their customers.

A low-cost direct-mail subscription plan is available to persons residing in the United States and its possessions (including APO and FPO numbers). Subscription rates are:

One Year (6 issues)	$1.00
Two Years (12 issues)	$2.00
Three Years (18 issues)	$3.00
Five Years (30 issues)	$4.00

Enclose check or money order for U. S. currency for the proper amount above made payable to "General Electric Company."

Residents of Canada may subscribe to **G-E HAM NEWS** for $1.00 per year from the Canadian General Electric Company, Ltd., Electronic Tube Marketing Section, 189 Dufferin Street, Toronto 3, Ontario, Canada. Enclose check or money order made payable to: "Canadian General Electric Company, Ltd."

Distribution of **G-E HAM NEWS** in more than 40 foreign countries is handled through the International General Electric Company. A listing of outlets is available from the **G-E HAM NEWS** office. Or, write to: Customer Inquiry Section, International General Electric Company, 150 East 42nd Street, 7th Floor, New York 17, New York, U. S. A.

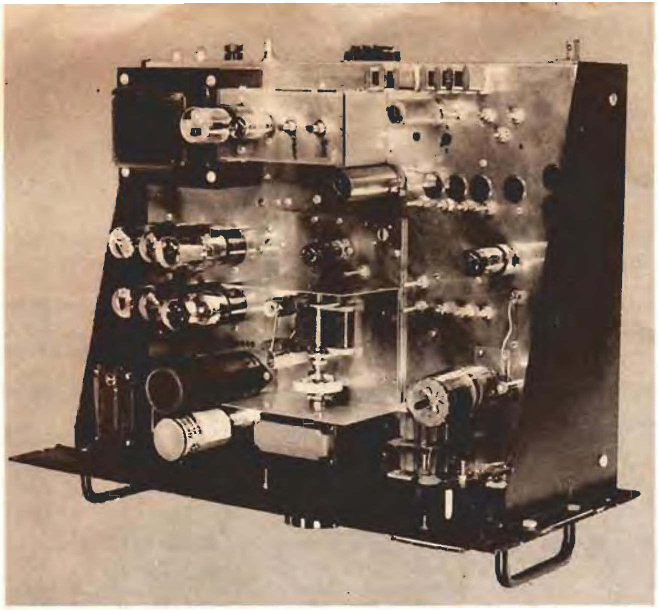

TOP VIEW of the hetrodyne exciter chassis with the cover over VFO frequency determining components removed. The socket for the 7581 power amplifier sits above chassis on ½-inch high pillars. 7581 control grid lead from 12BY7-A runs above chassis fram feedthrough bushing. Hole plugs near rear of RF section resulting from experiments with another type of coil and bandswitch assembly, and are not needed in the exciter as described. **CAUTION:** High voltage appears an the terminals of M_1 and S_3. Cover with insulating tape.

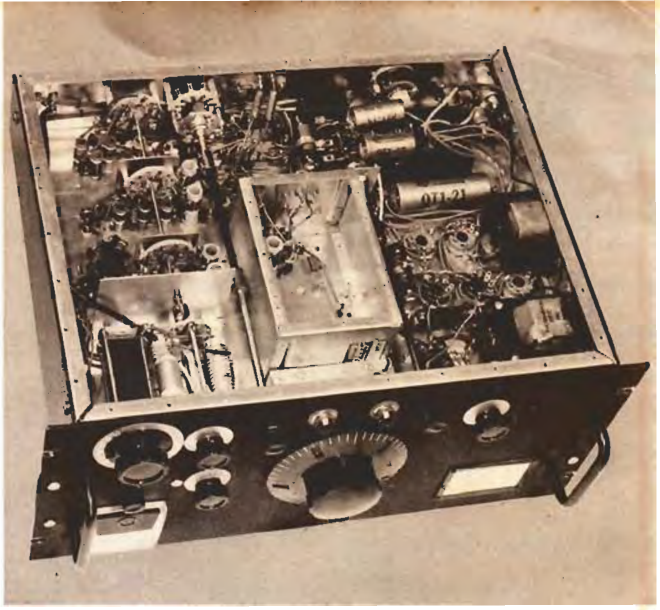

UNDER-CHASSIS VIEW of the exciter, showing placement of the smaller components in the power supply and keyer sections. Over-all bottom plate, and bottom cover on the packaged VFO unit, have been removed. Crystal oscillator plate coils. (L_1 to L_4) are at rear. Mixer plate coils (L_7) are just in front of the bandswitch section on the rear angle bracket, with the 28-megacycle coil at left, and 3.5-megacycle coil next to switch wafer. Plate coils for the 12BY7-A amplifier (L_8), hidden behind interstage shield, are in same order, left to right.

are selected by S_{1E}. A variable capacitor (C_6) in series with one side of these link coils serves as a loading adjustment for the amplifier stage.

METERING of the amplifier control and screen grid currents, plate current, high voltage, and RF output voltage at J_2, is provided for by a single 0 to 1-milliameter (M_1) with appropriate shunts, multiplier and RF rectifier circuitry. Positions of S_3, and meter full-scale ranges are:

Position	*Circuit*	*Max. Range*
A	7581 control grid. Curr.	10 ma.
B	7581 screen grid Curr.	50 ma.
C	7581 plate Curr.	250 ma.
D	High voltage	1000 volts
E	Relative RF output in volts	

Since W2FBS designed his exciter primarily for CW operation, a differential type keying system has been built into it. This keyer was described in the previous issue of *G-E HAM NEWS*.[3] A 12AU7-A twin triode functions as the mixer, grid blocking bias diode, and control tube for the 6BL7-GT twin triode which keys screen grid voltage to the 7581 power amplifier.

Both oscillators operate continuously, of course, but when the key is open, the 12BY7-A mixer and 12BY7-A buffer are cut off by a blocking negative bias applied through the 12AU7-A diode-connected section. The circuit also applies a negative voltage to the screen grid of the 7581, and it draws no plate current. Closing the key removes the blocking bias instantaneously, and the mixer and buffer start operating before the screen grid voltage to the 7581 rises to a positive value on the first keying digit.

The mixer and buffer stages continue to operate between keying characters, but when keying stops for a second, the negative bias slowly returns and cuts off both tubes. This minimizes the change in loading on the two oscillators during keying and virtually eliminates "chirp," or shifting of the tunable oscillator frequency during keying. A "zeroing in" signal is provided by pressing S_{301}, a push-button switch, with R_{304} as a signal level adjustment.

The keying waveform is also adjustable with this circuit, as outlined in the original article. Another feature — screen grid voltage on the 7581 may be adjusted with potentiometer R_{303} to the value which results in optimum RF power output from the 7581 stage to drive a succeeding, and larger, power amplifier.

The high voltage power supply is a dual-voltage type[4] with four single diode tube rectifiers in a bridge circuit. The transformer center tap delivers 60 percent of the full output voltage. The 6AX4-GTA or 6DE4 single diode tubes, while rated only for TV damping diode service, have operated experimentally in a number of similar power supplies for amateur gear with good results.

Neither side of the heater circuit should be grounded to avoid exceeding the maximum heater-to-cathode voltage rating of these tubes.

A separate bias voltage supply provides negative voltage for proper operation of the differential keyer; and, negative protective control grid bias for the 7581, adjusted to about minus 50 volts with 700 plate volts and 250 screen volts applied. A 3-position main power switch (S_{201}) permits turning on the tube heaters before the separate high voltage power transformer is energized.

All standard components were used throughout this exciter, and values within standard tolerances should work. The make and types of coil forms in TABLE III — COIL TABLE should be used, unless the constructor is willing to experiment and find the proper numbers of turns required for other types of coil forms which may be in the "Junk Box."

A LARGE SINGLE CHASSIS of aluminum houses W2FBS's exciter, and is 17 x 13 x 3 inches in over-all size (*Bud* AC-420, or equivalent). A standard 8¾ x 19 x ⅛-inch thick relay rack panel was used on this model, but a 17 or 18-inch wide panel from a table cabinet could be used instead, if one of the table-type cabinets on the market will house your exciter.

The packaged tunable oscillator (SOLID HIGH-C VFO) with its National-type NPW-0 500-division tuning dial is in the center of the chassis, with the rest of the RF section at the right, the power supply on the left, and the keyer behind the VFO. Most of the parts locations and general constructional details can be seen in the various views of the exciter on these pages.

Under the chassis, use of small-diameter coils, complete shielding of the tunable oscillator, and a shield between the 12BY7-A buffer and the 7581 power amplifier, are adequate precautions to guard against unwanted interaction between circuits. A ganged bandswitch is assembled from the Harrington GP-50 multi-band tuner, with Centralab 2500 series switch wafers coupled to it, to select the crystals, and coils L_1 through L_8.

FOOTNOTES:

[1] "Hetrodyning Mix-Selector Charts," **G-E HAM NEWS,** November-December, 1956 (Vol. 11, No. 6) issue.

[2] "SOLID HIGH-C VFO," by W2FBS, **G-E HAM NEWS,** July-August, 1959 (Vol. 14, No. 4) issue.

[3] "TWO-TUBE DIFFERENTIAL KEYER," by W2FBS, **G-E HAM NEWS,** May-June, 1961 (Vol. 16, Na. 3) issue.

[4] "DUAL-VOLTAGE POWER SUPPLIES," **G-E HAM NEWS,** September-October, 1957 (Vol. 12 Na. 5) issue.

[5] The Harrington GP-50 bandswitching tuned circuit is made by Harrington Electronics, Box 189, Topsfield, Mass.

Note: The November-December, 1956, and September-October, 1957 issues of **G-E HAM NEWS** are no longer available, but a reprint of the articles in these issues is being made in the new **G-E HAM NEWS SSB Package. See page 8 in the November–December,** 1961 issue for details.

A limited supply of both the July-August, 1959, and May-June, 1961 issues is available. Write to the **G-E HAM NEWS** office for copies; or see your local G-E Tube distributar.

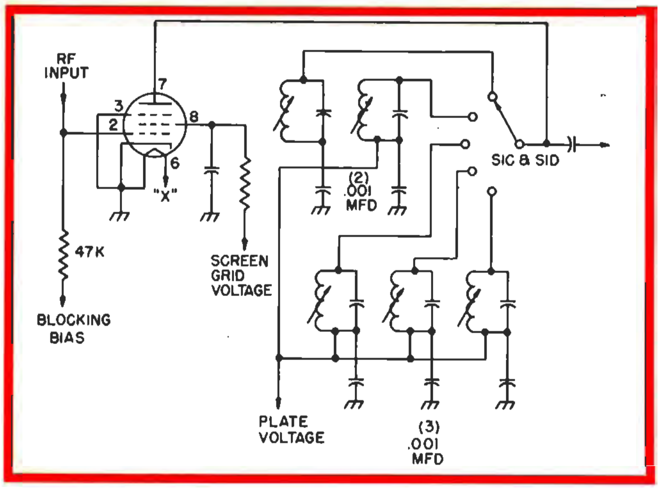

FIG. 4. DETAIL DIAGRAM for the 12BY7-A mixer plate, (L_7 — C_3) and 12BY7-A buffer/amplifier plate (L_8 — C_4) bandswitching tuned circuits. The lower end of each coil is bypassed separately to the chassis with a 0.001-mfd. disc ceramic capacitor.

TABLE II . . .

CRYSTAL OSCILLATOR & RF SECTION:

C_1.....100-mmf. silvered mica.

C_2.....20-mmf. silvered mica.

C_3.....Silvered mica, 5 required, see TABLE III for values.

C_4.....Silvered mica, 5 required, see TABLE III for values.

C_5.....10—140-mmf. variable, 0.030-inch air gap, ceramic insulation (part of Harrington GP-50[5]).

C_6.....20—730-mmf. variable, 2-section broadcast receiver type (Miller 2112, or equivalent).

D_1.....General purpose diode (G.E. 1N48).

J_1.....Chassis type coaxial cable connector (SO-239).

L_1 to L_4.....Crystal oscillator plate coils, all wound on Cambion CTC type LS-3 ready-wound coils with red-dot iron tuning slug; except L_4, which is wound on blank LS-3 form, as follows:

L_1.....5—10 Uh., CTC LS-3 — 10 Mc. coil.

L_2, L_3.....30—70 Uh., CTC LS-3 — 5 Mc. coil.

L_4.....4.6 Uh., 17 turns, No. 24 enameled wire closewound.

L_5, L_6.....7581 plate coils (part of Harrington GP-50).

L_7, L_8.....Five each, mixer and buffer plate coils, wound on CTC (Cambion) iron-slug tuned forms; see TABLE III for winding data.

L_9.....6 turns, No. 14 enameled wire on 100-ohm, 2-watt resistor.

M_1....0 to 1 milliameter, 2½-inch square (General Electric DW-91).

S_{1A} to S_{1D}.....5-position, 2-pole shorting type ceramic rotary tap switch wafers (three Centralab type "R" sections); use shaft and spacers from Centralab P-123 Index ossembly on S_2.

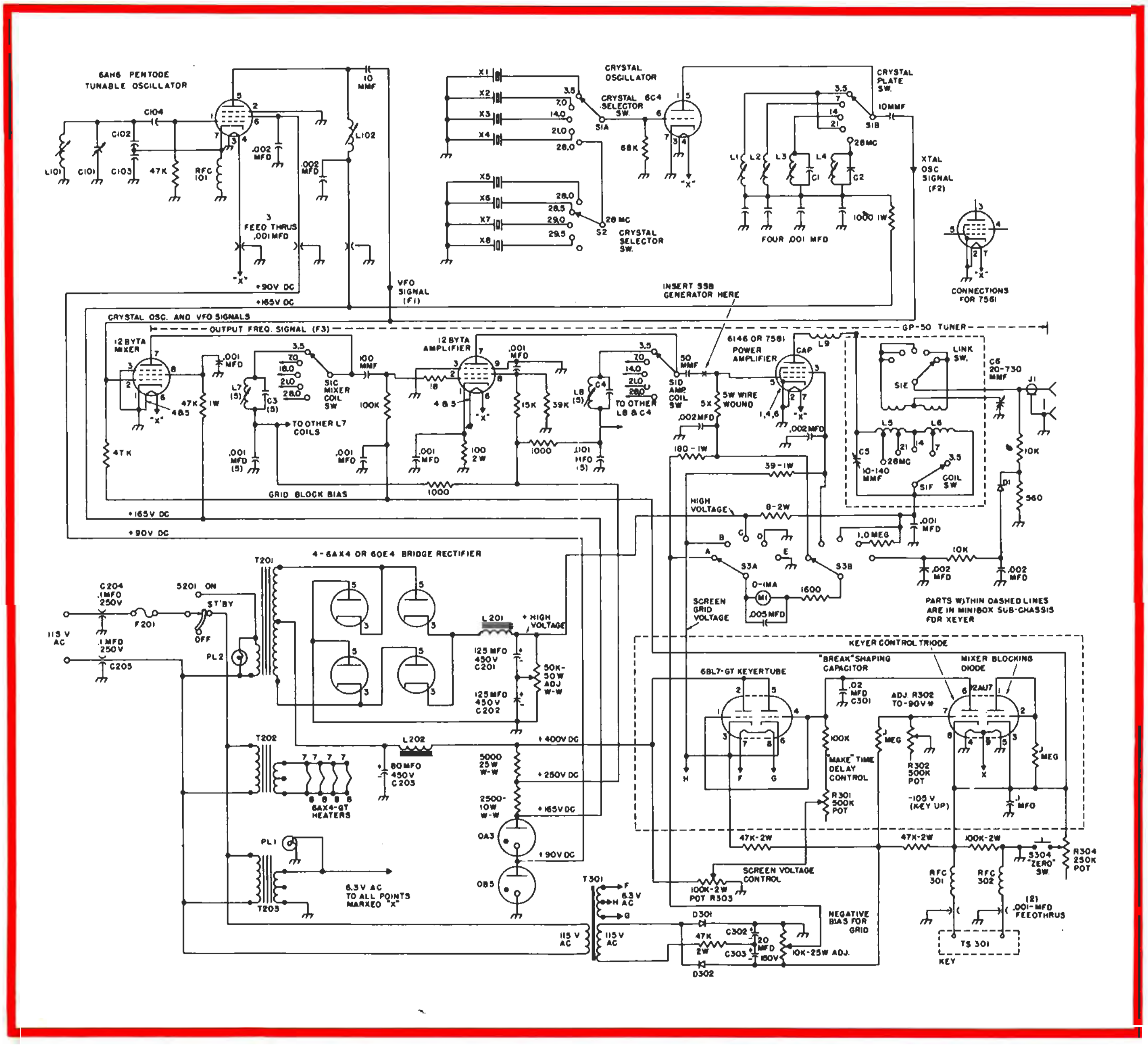

PARTS LIST — HETRODYNE EXCITER

S_{1E}, S_{1F}......5-position, 1-pole ceramic rotary tap switch wafers (Part of GP-50 bandswitching tuned circuit).

S_2......5-position, 1-pole non-shorting type ceramic rotary tap switch wafer (Centralab type "X" section) and 30-degree index assembly (Centralab P-123).

S_3......5-position, 2-pole 1-section rotary tap switch (Mallory 3226J).

X_1 to X_8......Quartz frequency control crystals; see TABLE III for exact frequencies.

TUNABLE OSCILLATOR: (for 12 Mc. output):

C_{101}...10 — 140-mmf varioble, double bearing type (Hammarlund MC-140-S).

C_{102}, C_{103}....0.0025-mfd. silvered micas.

C_{104}...100-mmf. silvered mica.

L_{101}....0.5 uh., 7 turns, No. 18 enameled wire, spacewound 1 inch long on ½-inch diameter iron slug-tuned ceramic coil form (CTC LS-7).

L_{102}....5 to 9 uh., 22 turns, No. 18 enameled wire, closewound 1 inch long on same type form as L_{101}.

RFC_{101}1.0-mh. 3-pi wound RF choke (National R-50, or equivalent).

POWER SUPPLY:

C_{201}, C_{202}....125-mfd., 450-volt DC can type electrolytic (G. E. XC1-15).

C_{203}...80-mfd., 450-volt DC tubular type electrolytic (G. E. QT1-21).

C_{204}, C_{205}......0.1-mfd., 250-volt AC working feedthrough type paper capacitors with screw terminals.

F_{201}....5-ampere, 125-volt 3AG fuse and chassis type fuse holder.

L_{201}....9-henry, 150-ma., smoothing choke.

L_{202}....17-henry, 60-ma., smoothing choke.

PL_1....½-inch green jeweled pilot lamp bracket, with miniature socket for 6.3-volt lamp.

PL_2....½-inch red jeweled pilot lamp bracket with candelabra socket for 115-volt lamp.

S_{201}....3-position, 1-pole progressive shorting tap switch (Centralab PS-1 wafer and P-121 index assembly).

T_{201}....High voltage transformer, 400 volts each side of center top at 200 ma., 115-volt primary.

T_{202}....6.3-volt, 4 ampere filament transformers, 115-volt primary.

T_{203}....6.3-volt, 5-ampere filament transformer, 115-volt primary.

KEYER SECTION:

C_{301}...0.02-mfd., 400-volt paper.

C_{302}, C_{303}......20-mfd., 150-volt DC tubular type electrolytic (G. E. QT1-13).

D_{301}, D_{302}....400-volt peak inverse, 100-ma. silicon rectifiers.

R_{301}, R_{302}....500,000-ohm linear-taper composition type potentiometer.

R_{303}....100,000-ohm linear-taper 2-watt composition type potentiometer.

R_{304}....250,000-ohm linear-taper composition type potentiometer.

RFC_{301}, RFC_{302}....7 uh. midget RF chokes (Ohmite Z-50, or similar).

S_{301}...SPST push-button switch.

T_{301}... Power transformer, 125-volt, 50 ma., winding, 6.3-volt 1.5-ampere heater winding, 115-volt primary (Stancor PA-8421).

TABLE III — COIL TABLE AND ALIGNMENT CHART

OUTPUT BAND MC. (F_3)	TUNABLE OSC. RANGE, MC. (F_1)	CRYSTAL FREQ., MC. (F_2)	FREQ. CONV. IN MIXER	CAP C_3 & C_4 (mmf.)	L_7 & L_8 IND. TURNS, WIRE SIZE, SPACING & FORM	ALIGNMENT FREQS., MC.	
						L_7	L_8
3.5 — 4.0	12.0 — 12.5	X_1 = 8.5	$F_3 = F_1 - F_2$	50	26 Uh., 63 T., No. 28 En. C.W. on PLS-7 form	3.65	3.85
7.0 — 7.3	12.0 — 12.3	X_2 = 5.0	$F_3 = F_1 - F_2$	30	10 Uh., 28 T., No. 28 En. C.W. on PLS-7 form	7.1	7.2
14.0 — 14.35	12.1 — 12.45	X_3 = 1.9	$F_3 = F_1 + F_2$	30	2.5 Uh., 14 T., No. 24 En. C.W. on PLS-5 form	14.1	14.25
21.0 — 21.45	12.0 — 12.45	X_4 = 9.0	$F_3 = F_1 + F_2$	20	1.8 Uh., 12 T., No. 24 En. C.W. on PLS-5 form	21.15	21.3
28.0 — 28.5	12.0 — 12.5	X_5 = 16.0	$F_3 = F_1 + F_2$	None	1.5 Uh., 11 T., No. 24 En. C.W. on PLS-5 form	28.5	——
28.5 — 29.0	12.0 — 12.5	X_6 = 16.5	$F_3 = F_1 + F_2$	None	Same as 28.0 Mc.	——	——
29.0 — 29.5	12.0 — 12.5	X_7 = 17.0	$F_3 = F_1 + F_2$	None	Same as 28.0 Mc.	——	29.2
29.5 — 29.7	12.0 — 12.2	X_8 = 17.5	$F_3 = F_1 + F_2$	None	Same as 28.0 Mc.	——	——

See block diagram (Fig. 2), and schematic diagram (Fig. 3) for F_1, F_2 and F_3. Uh. = Microhenries; T. = Turns; En. = Enameled Wire; C.W. = Close Wound; PLS-5 = CTC type ⅜-inch diameter ceramic coil form with red dot iron tuning slug. PLS-7 = CTC type PLS-7. ½-inch diameter ceramic coil form with red dot tuning slug.

FIG. 3. COMPLETE SCHEMATIC DIAGRAM of the hetrodyne exciter constructed by W2FBS. Only five tubes are required for RF section, including two oscillators, mixer, and two amplifier stages. A direct frequency type SSB generator (B & W Model 51-SB, or Heathkit SB-10) can be inserted between the 12BY7-A amplifier and the 7581 power amplifier, using short leads. Only one each of the mixer plate and buffer amplifier plate tuned circuits have been shown; see the detail Fig. 4, for complete coil wiring diagram. Resistances are in ohms, ½ watt unless otherwise specified. Capacitances are in mmf., or mfd., as marked near each capacitor. Critical capacitance values are given in TABLE II — PARTS LIST. Metering of circuits through switch S_3 is given in the text. High voltage on meter (M_1) and meter switch (S_3) can be eliminated by moving 8-ohm resistor and connections to position "C" on S_3 to cathode circuit (pin 8) of 7581 amplifier stage.

The chassis top deck should be laid out and drilled first, including the 4¼ x 8-inch cutout for the VFO unit. Locations for all major components on W2FBS's model are given in the chassis layout diagram, Fig. 5. Next, cut and drill all holes in the front panel; use the panel layout diagram, Fig. 6, as a guide, unless a different panel layout is desired. Then use the panel as a template to drill matching holes in the front of the chassis.

Make two small angle brackets from 1/16-inch thick sheet aluminum 2 x 2 inches (plus a ½-inch wide mounting flange), also the interstage shield 4 inches wide and 2½ inches high (plus a ½-inch wide mounting flange). Drill holes for the bandswitch in each plate. Temporarily assemble the GP-50 tuner and the switch wafer on the rear of the chassis (S_{1A} and S_{1B}), with these plates slipped onto the ¼ x 1/16-inch thick bandswitch shaft, and drill mounting holes for the angle brackets into the chassis.

Next, carefully center the two switch wafers over the switch shaft holes in the angle brackets (S_{1C} and S_{1D}) and drill mounting holes for them in the brackets. It's a good idea to elongate these mounting holes, so that each wafer can be rotated slightly to insure that *all* switch rotor contacts are fully engaged in the *same* contact position on each wafer when the detent on the GP-50 tuner switch is in position.

A ¼-inch diameter brass rod about 2 inches long is slotted 1/16-inch wide at one end, and the flat switch shaft is soldered into this slot. The flat shaft, and the ½ and ¾-inch long spacers which space the switch wafers from the angle brackets and chassis rear

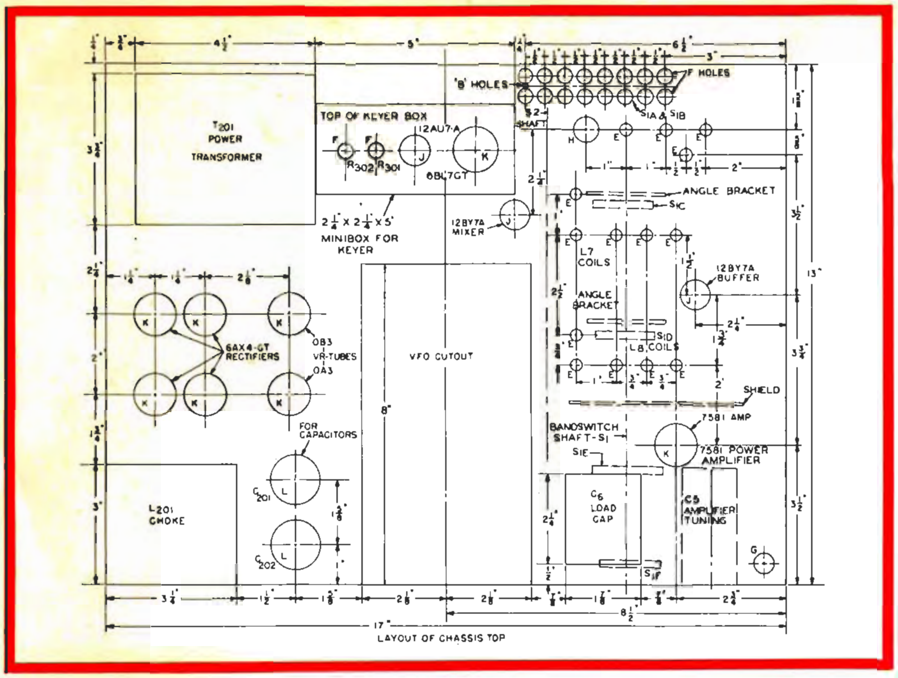

FIG. 5. CHASSIS DRILLING DIAGRAM for the hetrodyne exciter. Hole locations and sizes are those for the parts used in W2FBS's model. All parts should be carefully checked to determine hole sizes and locations actually required before drilling the chassis. Approximate locations for the angle brackets for the bandswitch, and interstage shield are illustrated. Outlines showing the space allotted to the power transformer (T_{201}), filter choke (L_{201}) and packaged VFO unit are approximate and indicate the space needed for the largest such parts apt to be used in constructing this exciter unit.

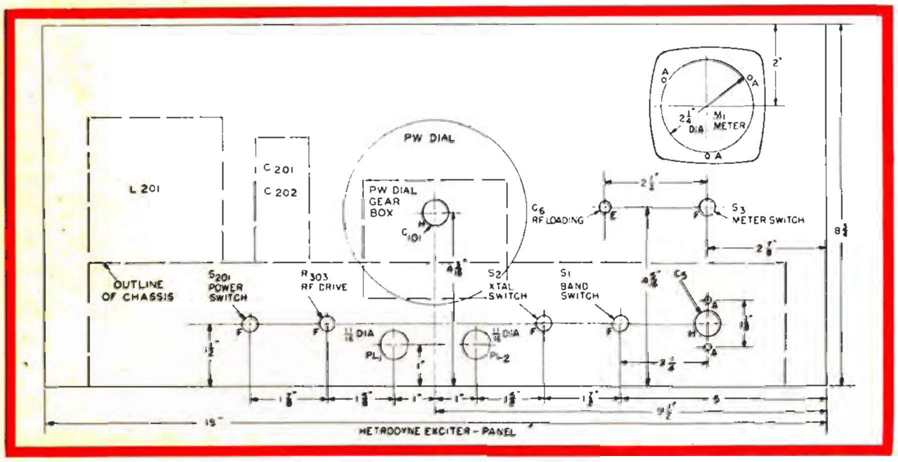

FIG. 6. PANEL LAYOUT DIAGRAM for the hetrodyne exciter. Locations shown for parts match those in the chassis drilling diagram, Fig. 5. The meter may be moved to suit the constructor's requirements. W2FBS has since added a "zero" switch (S_{304}), and zeroing signal level potentiometer (R_{304}), where PL_1 and PL_2 are shown on this diagram. The pilot light brackets were then moved to the blank section of the panel left of the POWER SWITCH (S_{201}), and below L_{201}.

TABLE IV HOLE SIZE CHART

"A"	drill—No. 31 clears 4-40 screw.
"B"	drill—No. 26 clears 6-32 screw.
"C"	drill—No. 17 clears 8-32 screw.
"D"	drill—No. 9 clears 10-32 screw.
"E"	drill—9/32-inch diameter.
"F"	drill—⅜-inch diameter.
"G"	drill—½-inch diameter.
"H"	socket punch—⅝-inch diameter for 7-pin miniature tube socket.
"J"	socket punch—¾-inch diameter for 9-pin miniature tube socket.
"K"	socket punch—1 1/8-inch diameter for small octal tube socket.
"L"	socket punch—1¼-inch diameter for large receiving tube socket.

wall, are obtained from the index assembly kit for S_2 (Centralab P-123 index).

Make sure the whole bandswitch assembly turns smoothly before disassembling it from the chassis. Then the tube and crystal sockets, and other smaller components in the RF section — but not the coils — can be mounted. Wire in the bypass capacitors, resistors, and power wiring in this section of the chassis. Then add the tube sockets and other small components in the power supply and portion of the keyer below the chassis, and wire them.

The keyer unit subchassis — a 2¼ x 2¼ x 5-inch Minibox (*Bud* CU-2104A, or equivalent) — can also be assembled and mounted on the chassis. All components and wiring shown inside the dashed box at the lower right-hand corner of the schematic diagram, Fig. 3, should be included in this box.

Wind all of the coils, using the specifications given in TABLE III — COIL TABLE. Note that there is a total of 16 small slug-tuned coils; one each of L_1 to L_4, L_{101} and L_{102}, plus five each of L_7 and L_8. It's a good idea to check each of the coils with a grid-dip oscillator to see that they tune about 10 percent higher than the alignment frequencies specified for each in TABLE III. Connect the proper capacitances across them (connect 10-mmf capacitors temporarily across L_1, L_2 and L_{102} to represent circuit capacitance), with the tuning slugs at mid-position. Cover the windings with good quality coil dope after checking the tuning range.

Mount the switch wafers on the rear of the chassis (S_{1A} and S_{1B}, and S_2) and wire the leads to the crystal sockets with No. 18 tinned copper wire. Then the four crystal oscillator coils (L_1 to L_4) can be mounted and wired. Wire leads which run from the RF tube sockets to the bandswitch and coils should be soldered to the socket before the angle brackets, switch wafers, and other RF coils are assembled. The interstage shield, and GP-50 tuner should be mounted after all other parts and wiring are in the front portion of the RF section.

Resistors for the 7581 tube current metering circuits are wired in close to this tube socket, and wire leads (preferably color coded) are run up through a ½-inch rubber grommet at the right front corner of the chassis and connected to the meter selector switch (S_3). This switch and the meter (M_1) may be fastened to the chassis temporarily with a scrap piece of hardboard or sheet metal.

It's a good idea to hook up a temporary external power supply to the RF section and try it out before the chassis gets too full of the keyer and power supply components (especially the heavy power transformer), and the VFO unit. Tuneup is described later in this article, but this procedure may be followed initially now, and a recheck made later.

After the RF section has been checked and found to be working properly, the power transformer, filament transformers and other heavier components may be mounted and wired into place. The VFO unit is fastened to the chassis, and the panel and meter assembled. If the National NPW-0 dial is used, follow the manufacturer's assembly instructions closely to avoid getting the dial out of adjustment (we speak from experience on this — ed.).

A matched set of panel control knobs should be added to the exciter to achieve an integrated appearance, and decal type lettering can be used to identify all of the controls. W2FBS made up a chart of tuning dial settings for the 7581 plate tuning and loading controls for his model.

THE ALIGNMENT PROCEDURE should be quite simple if the coils have been checked for proper frequency coverage ahead of time (this is much easier than having to remove a coil to add or remove turns once it has been assembled).

Plug in the tubes as needed to activate each stage in turn for alignment.

Heater and plate power may be temporarily applied, as previously mentioned, to tune up the RF section before the power supply and keyer unit construction is finished. About 100 plate volts is required for the oscillators, 200 volts for the mixer and buffer plates, and amplifier screen grid, and about 300 to 400 volts for the 7581 plate. About 20 volts of negative bias is adequate for the 7581 control grid.

The tunable oscillator should be adjusted to cover 6.0 to 6.25 megacycles in the grid circuit before it is mounted in the exciter. With a straight-line capacitance unit for C_{101}, tuning was nearly linear, and an output frequency of exactly 12.0 to 12.5 megacycles was covered from maximum to minimum capacitance in W2FBS's model. Thus, the dial read one kilocycle per division, and frequency was direct reading to within a few divisions across the tuning range. Check the frequency coverage at 12 megacycles with a receiver. Adjust L_{102} for maximum signal at 12.25 megacycles.

The crystal oscillator should be tuned up by listening for the oscillator signal with a receiver which tunes to each of the crystal frequencies. One tuned circuit (L_1) is adjusted so that both the 8.5 and 9.0-megacycle crystals oscillate at one setting. The four crystals from 16.0 to 17.5 megacycles should oscillate with a single setting of the slug in coil L_1. Rotate the bandswitch, S_1, to the proper positions for these adjustments.

To tune the mixer plate circuits, set the bandswitch to the 3.5 megacycle position, and the tunable oscillator to an output frequency of 12.15 megacycles. Tune a receiver to 3.65 megacycles and listen for a signal. Tune the slug in the proper L_7 coil for maximum signal. Repeat the adjustment of the slugs in the L_7 coils for the other bands, setting the tunable oscillator to deliver the proper mixer output signal frequencies for L_7 as listed in TABLE III. Use the "29.0" megacycle setting of S_2 to align the 28-megacycle L_7 coil.

Next, align the plate circuits (L_8 and C_4) of the 12BY7-A amplifier by plugging in the 7581 power amplifier tube with the heater energized, but without screen grid or plate voltage applied. Set S_1 at the 3.5-megacycle position and, with the tunable oscillator set for a 3.85-megacycle *exciter output* frequency, adjust the 3.5-megacycle L_8 coil for maximum grid current in the 7581 with S_3 in position "A." Repeat this adjustment at each position of S_1 using the *exciter* output frequencies for L_8 in TABLE IV. Use the "29.0" megacycle position of S_2, align the 28-megacycle L_8 coil.

CAUTION: When aligning the mixer plate (C_3—L_7) and buffer plate (C_4—L_8) tuned circuits in this exciter, check *carefully* — and then *recheck* each circuit with a well-calibrated grid-dip oscillator. This will insure that the circuits are aligned to the frequencies specified in TABLE III, and not to a spurious signal frequency, such as a harmonic of either oscillator.

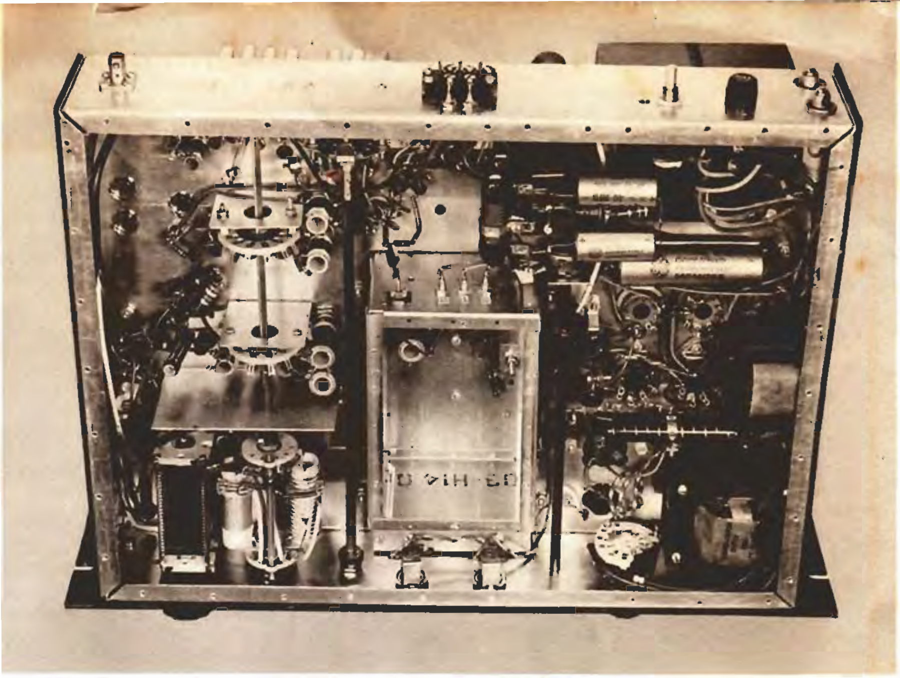

REAR VIEW of underside of exciter, showing more constructional detoils. Long extension shafts each side of VFO unit run to crystal switch (S_2) and screen grid voltage control (R_{303}) for the 7581 amplifier. Components on rear wall of chassis are (left to right) RF output connector (J_1), terminal strip for key connections, negative bias adjustment potentiometer for the 7581, power fuse (F_{201}), and power line feedthrough bypass capacitors (C_{204} and C_{205}).

Then, go back and realign the mixer plate circuit coils (L_7) for each band, setting the VFO to obtain the *exciter output* frequencies specified for L_7, and using maximum control grid current of the 7581 tube as an indication of resonance. The alignment frequencies given in TABLE III provide for stagger-tuning of the L_7 and L_8 circuits on each band to achieve relatively constant control grid current in the 7581 power amplifier as the VFO is tuned over its range.

Finally, connect a 50 or 70-ohm dummy antenna load — one capable of dissipating about 50 watts — to J_2 and apply screen and plate voltage to the 7581 stage. Test this stage on every band, tuning C_5 for minimum plate current, and loading to about 60 milliamperes plate current with C_6. Then check to see if maximum RF output, as indicated on position "E" of S_3, occurs at the same setting of C_5 as minimum plate current. Any tendency toward self-oscillation in the 7581 stage can usually be corrected by inserting an 18-ohm resistor in series with control grid socket connection, as is shown for the 12BY7-A buffer stage.

If you are satisfied with the performance of the RF section, remove power (and the tubes from their sockets, if you value them) and continue construction of the power supply and keyer unit. Once construction has been completed, test the power supply circuit first before plugging in the other tubes. Leave out the 12AU7-A and 6BL7-GT keyer tubes, but insert a 10,000-ohm, 2-watt resistor into pins 5 and 8 of the 6BL7-GT socket. Give the RF section a thorough recheck, following the whole alignment procedure again, as outlined above.

Adjust R_{302} in the keyer so that minus 90 volts is measured at pin 7 of the 12AU7-A. Plug in the 6BL7-GT and 12AU7-A tubes and check the operation of the keyer unit. Adjust R_{301} to obtain your preferred degree of sharpness in the keying "make" characteristic. The value of C_{301}, 0.02 mfd., gives a medium "break" characteristic. Reduce this value for a sharper "break," or increase it for a longer "break."

The length of time that the blocking bias holds the mixer cut off can be varied by changing the values of C_{304} and R_{304}. Increase these values for a longer "hold" time. All this adjustment of keying characteristics is done with the dummy antenna load still connected.

Connect the exciter to your station's antenna changeover system and hammer out a good snappy "CQ." If the band you are on (and the other ham operators) is "alive," you should hear at least one answer. And — during the course of this first QSO, don't be too surprised to hear the other fellow say, "Say, OM, that's a mighty fine-sounding CW signal you have there — no chirps, thumps or key clicks — real smooth."

This one comment should make the 100 or more hours of construction time, that this exciter probably will require, well worth the effort. W2FBS felt this way on his first contact with his model exciter, and he's sure you will too.

SIDE VIEW of the packaged VFO unit which fits into the center of the main chassis. Complete constructional details were described in a previous issue.[2]

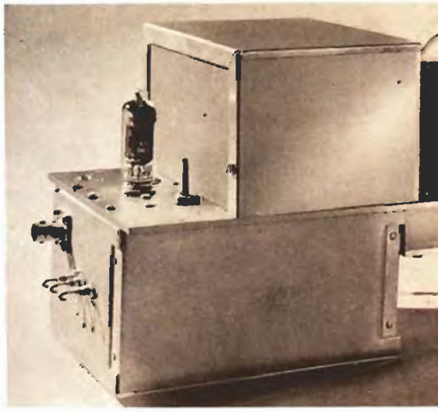

SCANNING THE SPECTRUM

MEET AMATEURS AMONG G-E TUBE DISTRIBUTORS —

Ward J. Hinkle, W2FEU, owner of **Adirondack Radio Supply** in Amsterdam, N.Y., examines one of General Electric's tiny TIMM (Thermionic Integrated Micro Module) circuits during the electronic parts distributors show in Chicago. These micro-miniature circuits operate in hot environment of 580 degrees, C. Each stack contains, in addition to heaterless thermionic diode and triode tubes, resistors, capacitors and inductors required for the specific circuit application for which the module is designed. A complete descriptive brochure on TIMM circuits is available from the *G-E HAM NEWS* office.

Ward's profile is well-known to readers of his advertisements in the amateur radio journals. He is active on all bands, both fixed and mobile. Adirondack Radio Supply is currently celebrating its 25th year.

NEW MINIATURE TUBES FOR MOBILE COMMUNICATIONS —

Four new miniature G.E. receiving tubes designed especially for two-way mobile radio communications equipment are in production at General Electric's Receiving Tube Department in Owensboro, Ky. Radio amateurs should find many applications for these versatile new tubes in home-constructed radio gear.

The four tube types, and their functions, are:

7701 Class CRF Beam Power Pentode;

7716 High-mu Triode/Sharp Cutoff Pentode;

7717 High-gm VHF Tetrode RF Amplifier;

7724 Duplex Diode/High-mu Triode.

All the above tubes, as well as the twenty-two other Communications types in the G-E line, have heaters designed to withstand appreciable on-off cycling, and the normal variations in supply voltage encountered in automotive electrical systems. In addition, these tubes are constructed to withstand the shock and vibration of mobile radio service.

Complete technical data on these tubes may be obtained from the *G-E HAM NEWS* office.

COMING NEXT ISSUE:

TRANSMITTER PROTECTIVE CIRCUITRY

is the subject of a discussion by Norman L. Morgan, W7KCS/9, which will appear in the September-October, 1961 issue. Norm is shown here measuring a voltage to check the effectiveness of the protective circuits in his home-built transmitter. Inexpensive relays are used to guard costly transmitting tubes and other components against accidental overloads.

Also in this issue is an article, "INDUCTIVE TUNING FOR HIGH-C OSCILLATORS," by **Jack Najork,** K9ODE, a long-time author of amateur radio articles. An avid home constructor, Jack reports the results of extensive experiments with stable tunable RF oscillators, and describes the construction of an unusual bandswitching VFO in his article.

Be sure to pick up this issue in September from your nearest franchised G-E Tube distributor.

AMATEUR BAND COVERAGE BY TWO-WAY MOBILE RADIO —

Speaking of mobile radio, we're sometimes asked why the frequency coverage specifications of two-way mobile radio equipment for the commercial 25—50 and 150—174-megacycle bands often includes the adjacent amateur bands, 50—54 and 144—148 megacycles.

Manufacturers have not extended these frequency ratings to encourage the sale of this equipment to radio amateurs; but this amateur band coverage *is* included to qualify the equipment under Radio Amateur Civil Emergency Service (RACES) regulations.

Thus, the many civil defense organizations which establish radio communications networks in the RACES segments of the 50 and 144-megacycle amateur bands can obtain this high-grade commercial equipment for these networks. And most commercial two-way mobile radio — such as General Electric's "Progress Line" — easily meets these rigid RACES requirements.

Two-way radio manufacturers do not want these amateur-band frequency ratings to be misconstrued as a move to extend commercial two-way radio into the VHF amateur bands. Amateur activity there is increasing by leaps and bounds, of course, thanks to the availability at low cost of simple, but efficient transceivers with from five to ten tubes.

HAM NEWS
TUBES

Available **FREE** from your G-E Tube Distributor

JULY-AUGUST
1961
VOL. 16, NO. 4

G.E. TUBES

HAM NEWS

SEPTEMBER-OCTOBER, 1961

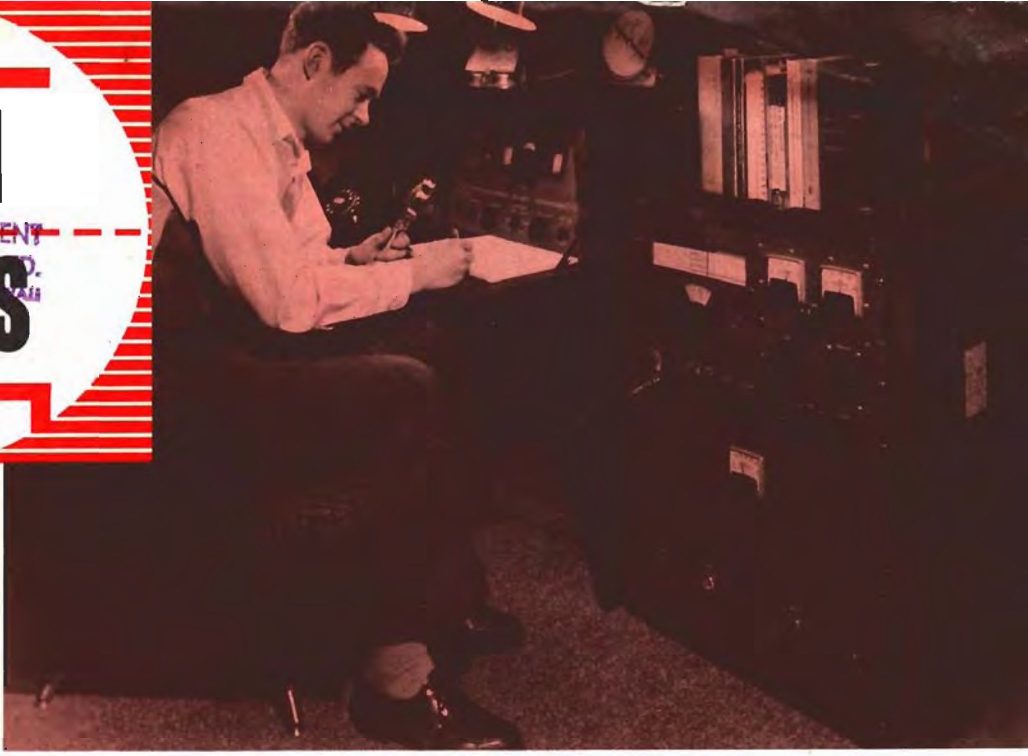

NEAT STATION AT W7KCS/9, including the compact 250-watt CW and AM transmitter in which the protective circuits described in this article are installed. Transmitter covers 3.5 to 29.7 megacycles, and, except for commercial VFO and dial, is completely home made. Norm Morgan operates his transmitter mainly on the 21 and 28-megacycles bands. He is an Application Engineer with General Electric's Specialty Motor Department in Fort Wayne, Indiana. Norm has also authored several articles on electronic control circuits in trade magazines.

TRANSMITTER PROTECTIVE CIRCUITRY

By Norman L. Morgan, W7KCS/9

***EVERY TRANSMITTER** should have circuits designed into it to protect valuable components — and especially the transmitting tubes — against failure due to accidental overloads. Be safe — not sorry — with these low-cost circuits by W7KCS/9.*

Adequate protection of transmitting tubes is like taking out fire insurance for your home — it's pretty inexpensive compared with the cost of power components. Often power tube failures happen during initial testing when the builder is busily checking the transmitter operation and fails to notice damaging currents in expensive tubes.

Ideally the philosophy of protection should be that the tube can survive on only its own protective circuits, as shown in Fig. 1. With this idea as the objective in designing power supplies, only the usual precautions are needed to prevent extensive tube and component damage.

Electrical failures are caused by excessive element heating or element overvoltage. Excessive dissipation is generally a result of (1) loss of excitation, (2) failure of plate or bias supplies, or (3) excessive loading. Overvoltage is mainly a result of low voltage drop in series resistors when power is correctly applied to the tube.

Loss of excitation in unprotected circuits can cause damaging screen and plate currents. Protection is generally supplied by clamp tubes or fixed bias to cut off these currents. Although clamp tube operation is quite popular and is extensively used by many amateur designers, it must be realized that screen grid voltage variation is built in with these circuits. Clamp tubes usually operate with a dropping resistor which results in undesirable screen voltage changes so detrimental to good SSB operation of a linear amplifier.

On the other hand, the high reliability and positive protection of fixed bias to cut off currents allows the screen grid to be operated directly from a stiff power source to achieve the good voltage regulation necessary for class AB (triodes in class B) operation of the power amplifier.

Loss of plate voltage in tetrode or pentode tube essentially transfers plate current to the screen if it is separately powered, which generally results in excessive screen grid current and rapid failure.

Actual failure of the plate power supply is a rare phenomenon, but its effect is the same as when the high voltage power supply switch is accidentally switched off during operation. This is especially true during initial tune-up and neutralizing when the plate power supply may not be energized, although screen voltage may be accidentally applied along with power to exciter stages.

(continued on page 2)

REAR VIEW of transmitter at W7KCS/9, with complete power supplies and modulator in lower unit, and RF exciter and power amplifier, and audio preamplifier in upper unit.

4A-4589 Chrysler

IN THIS ISSUE

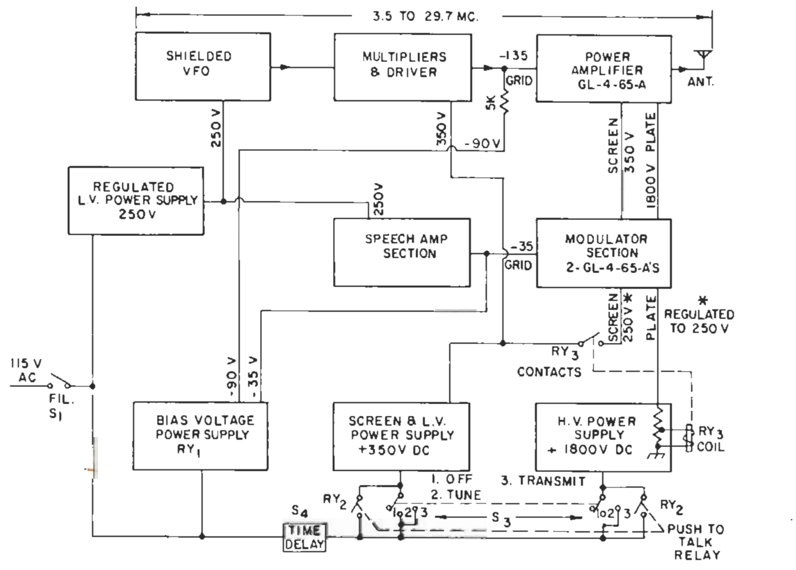

FIG. 1. BLOCK DIAGRAM of W7KCS/9's home-built transmitter, showing where protective circuits have been incorporated to protect the RF power amplifier and modulator tubes. Details are given in the text and subsequent diagrams.

TRANSMITTER PROTECTIVE CIRCUITRY

(continued from page 1)

The two most used methods of preventing screen damage due to these circumstances are (1) screen dropping resistors or screen wattage limiting resistors, and (2) various current relays. The dropping resistor alone can cause screen grid failure through overvoltage resulting from low screen current.

The undesirable effects of poor screen grid voltage regulation through a dropping resistor can be partially offset by connecting a voltage regulator VR tube as shown in Figure 2. The wattage limiting resistor is chosen so that the screen grids cannot draw more than rated dissipation no matter what current they demand. The voltage regulating tubes maintain the 255 volt screen voltage for all normal values of screen current.

Should the screen grid begin excessive current the limiting resistor drops the voltage, extinguishing the VR tubes and limiting the total dissipation of the screen grid to a safe level. Note that the screen grid should be operated somewhat less than maximum allowable wattage in order to leave some reserve for this action.

SCREEN GRID OVER-CURRENT RELAYS

or plate voltage sensing screen relays allow the screen voltage to be supplied by a *stiff* power source. The screen grid current sensitive relay is probably the most positive method of preventing failure. It will disconnect screen voltage when the screen grid current is excessive.

However, a less expensive method, the plate voltage sensing relay, protects the screen grid when plate voltage is not present and can be connected from the high voltage bleeder resistor to ground, as shown in Figure 2. The plate voltage will thus approach its full value before the screen power supply is connected to the tube screen grid. Unless there is plate voltage present, no screen voltage can be applied to the power amplifier or modulator tubes.

Failure of the negative control grid bias supply when it is used, is fortunately a rare occurrence. However, protection against this failure can be accomplished by installing relays in the plate and screen circuits which turn on these voltages only when bias voltage is present.

A push-to-talk switch can be connected in series with a voltage sensing relay which energizes the AC side of both the high voltage power supply and the screen power supplies. Notice in the schematic diagram of Fig. 2 that the voltage sensing relay is operated directly from the power amplifier grid bias source. Thus, plate and screen power cannot be applied unless grid bias is present. This relay in turn actuates the power relay which actually closes the primary AC circuits.

Since the coil current of the power relay is generally rather high it is advisable to use a small, low current relay in the push-to-talk circuit to actuate the power relay. Also, the power relay should be rated considerably higher than the normal primary current, since this current is largely inductive and may cause arcing and pitting of contacts on lower rated relays. Ideally, AC motor starting relays should be used to minimize these difficulties.

Damage to expensive power amplifier tubes can result from excessive plate loading, and can be pre-

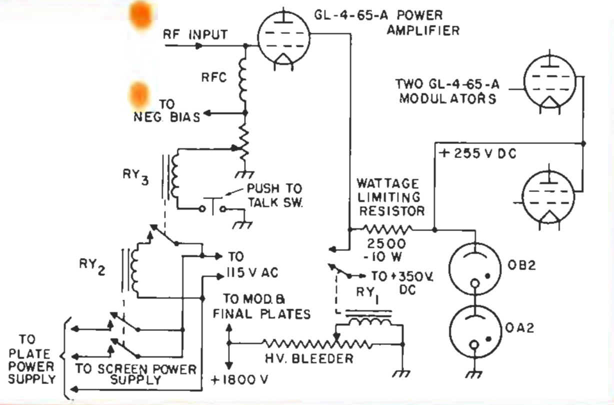

FIG. 2. SIMPLIFIED SCHEMATIC DIAGRAM of the basic protective circuits in the W7KCS/9 transmitter. High voltage plate supply cannot be turned on by RY_2 unless RY_3 is energized by the negative bias supply. Screen voltage is off until sufficient plate voltage energizes RY_1.

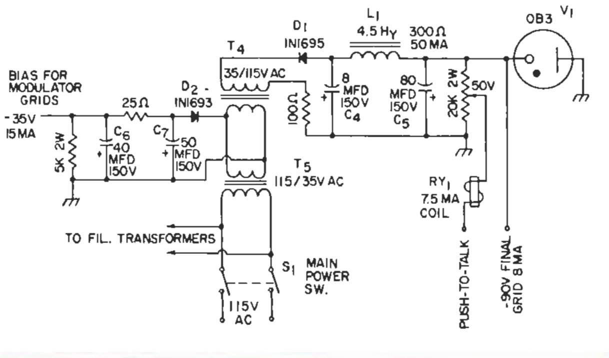

FIG. 3. SCHEMATIC DIAGRAM of the dual bias voltage supplies. Transformer T_5 and rectifier D_2 supply 35 volts negative bias for modulator control grids. T_5 also supplies primary voltage for T_4, a 90-volt regulated bias supply for RF power amplifier.

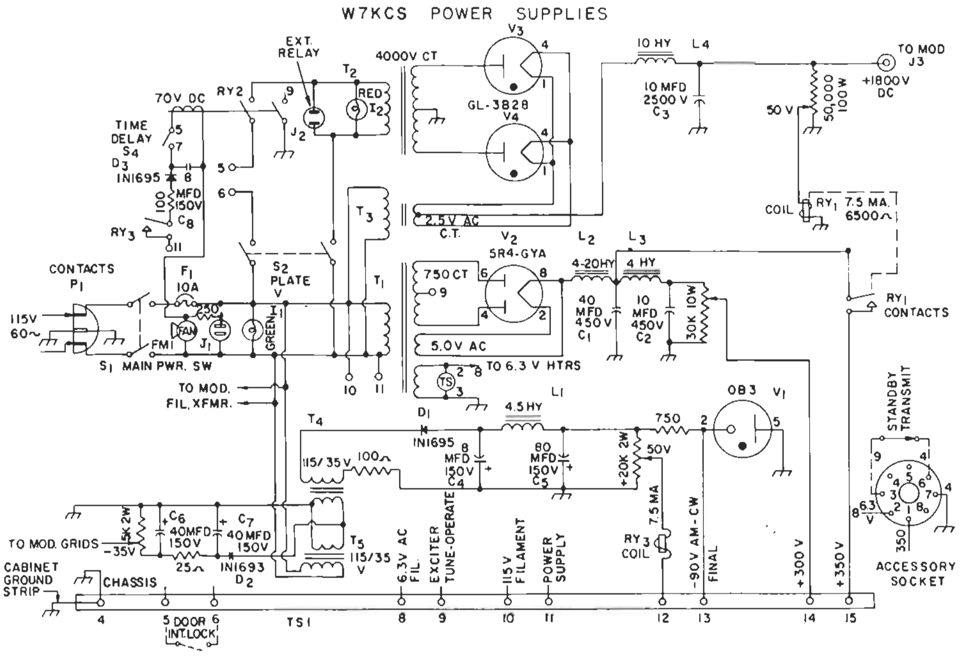

FIG. 4. COMPLETE SCHEMATIC DIAGRAM of protective circuits in the power supplies of the W7KCS/9 transmitter. Diagram includes the basic protective circuits shown in Fig. 3. Descriptions of components are given in TABLE I — PARTS LIST. Capacitances are in microfarads (MFD); resistances are in ohms, with wattage ratings given for resistors over ½ watt. Reloys RY$_1$, RY$_2$ and RY$_3$ can have 5,000-ohm, 6-ma. coils; RY$_1$ and RY$_3$ have SPST contacts, RY$_2$ has DPST contacts.

TABLE I — PARTS LIST

C$_1$.....40-mfd., 450-volt working tubular electrolytic (G.E. QT1-14).
C$_2$.....10-mfd., 450-volt working tubular electrolytic (G. E. QT1-6).
C$_3$.....10-mfd., 2500-volt working Pyranol metal cased capacitor.
C$_4$, C$_8$—8-mfd, 150-volt working electrolytic (G. E. QT1-5).
C$_5$.....80-mfd., 150-volt working tubular electrolytic (G. E. QT1-20).
C$_6$, C$_7$....40-mfd., 150-volt working electrolytic (G. E. QT1-13).
D$_1$, D$_3$—400-peak volt, 100-ma. silicon rectifier (G. E. 1N1695).
D$_2$.....200-peak volt, 100-ma. silicon rectifier (G. E. 1N1693).
F$_1$......10-ampere fuse and 3AG type fuse holder.
FM$_1$...115-volt; 60-cycle, shaded-pole motor (G. E. KSB-33).
I$_1$......pilot lamp with 115-volt Canadelabra socket, green jewel.
I$_2$......same as I$_1$ with red jewel.
J$_1$, J$_2$....2-pin female chassis type power receptacle.
J$_3$......high-voltage insulated connector.
L$_1$..... 4.5-henry, 50-ma. filter choke.
L$_2$......4 — 20-henry, 150-ma. swinging type choke.
L$_3$..... 4-henry, 150-ma. filter choke.
L$_4$......10-henry, 300-ma. high-voltage insulated filter choke.
P$_1$.....3-pin grounding type male power plug.
S$_1$ S$_2$....DPST 10-ampere power toggle switch.
S$_3$..... 3-position, 2-pole single section tap switch.
S$_4$.....115-v thermal switch; 60-second delay (Amperite 115NO60).
T$_1$......power transformer, 750 volts, center tapped at 150 ma., 5-volt, 2-ampere, and 6.3-volt 6-ampere heated windings; 115-volt primary.
T$_2$......high voltage transformer, 4000 volts, center tapped, at 300 ma., 115-volt primary.
T$_3$......filament transformer, 2.5-volt, 10-ampere secondary, 10,000-volt insulation; 115-volt primary.
T$_4$, T$_5$....35-volt, 100-ma. secondary, 115-volt primary.
TS$_1$....terminal strip, 15 terminals.
V$_1$.....G. E. type 0B3 90-volt, octal-base voltage regulator tube.
V$_2$.....G. E. type 5R4-GYA full wave high-yacuum rectifier.
V$_3$, V$_4$....GL-3B28, Xenon-filled high voltage rectifiers.

vented by plate over-current relays, other element relays, or by careful tune-up procedure. Normally, during initial tune-up a wary eye is kept on the plate currents so that excessive loading of these circuits is generally only a result of careless procedure. At first glance these schematic diagrams (Figs. 2 and 3) appear to contain several electro-mechanical elements; however, it is surprising how inexpensively voltage-sensitive relays can be obtained. The two voltage-sensitive relays used in the W7KCS transmitter were less than $1.00 each.

Low-cost silicon diodes have greatly simplified the construction of grid bias supplies because they provide extremely low resistance in the forward direction. This is important in bias supplies since the over-all equivalent resistance of the supply adds to the grid leak resistance to determine the total grid bias under excitation.

In the W7KCS transmitter it is necessary to provide two values of bias voltage; namely, minus 135 volts power amplifier, and minus 35 volts for the modulator. Ninety of the 135 volts are obtained across the OB3 90-volt regulator tube in the circuit of the dual bias supply, Fig. 3.

The AC side of the circuit is two 110/35 volt transformers connected primary to secondary and secondary to primary. With the low current drain on the bias supply it is possible to maintain a DC voltage nearly the same as the input AC RMS voltage — or, the output voltage can be greater than the AC input voltage by using input filter capacitance. In addition, the high capacitance improves the normally poor regulation of half-wave rectifier supplies. Current limiting resistors are used (the 100 ohm resistor in the 90 volt supply) in order to reduce the transient currents during the first on-cycle of the rectifier. These small rectifiers cannot handle an extremely high current for an extended length of time; consequently, the impedance looking toward the source must sometimes be artificially made higher. In the low voltage (35 volts) supply the in-rush current was well within the approximately 20 ampere one cycle limit on these rectifiers.

(continued on page 7)

INDUCTIVE TUNING FOR HIGH-C RF OSCILLATORS

By Jack Najork — K9ODE

K9ODE TUNES UP HIS VFO EXCITER after completing construction. Exciter is housed in perforated metal cabinet under Jack's left elbow. Corner of home-built transmitter appears on shelf above station receiver at right. Jack Najork was first licensed as W2HNH in 1934 and became K9ODE in 1958. He operates mostly on CW, with some voice operating on double sideband and 144 megacycles.

K9ODE is District Sales Manager in Chicago for General Electric's Communication Products Department, which manufactures and sells G. E.'s famous Progress Line two-way mobile radio. He formerly was located in Syracuse, N. Y., where he was an engineer on electronic test equipment, and later a field engineer for the radio and television receiver department. Jack has written a number of articles describing his home-built equipment for amateur radio and other electronics publications.

THE ADVANTAGES of inductive tuning in high stability oscillators (VFO's) have long been recognized by manufacturers of radio equipment. Unfortunately, the construction of a precision, high stability variable inductance is beyond the capabilities of the average radio amateur, and he has had to be content with capacitive tuning for his home built VFO. These VFO's are capable of excellent stability, but such stability is achieved only through meticulous attention to mechanical as well as electrical construction.

The pros and cons of the most popular types of capacitance-tuned oscillators — the Clapp and the high "C" Colpitts — have been exhaustively discussed in the amateur journals in recent years. The Clapp circuit is capable of excellent stability but mechanical problems of anchoring down the large, high "Q" inductance, together with variations in output over wide frequency changes remain bugaboos.

The high "C" Colpitts does away with the inductance mounting problem because the required coil is small and can be made mechanically sturdy. Large values of voltage divider capacities are required, however, and these, in turn, call for the use of extremely large values of tuning capacitances to cover the lower frequency bands. Such tuning capacitors are generally available only as replacement two or three section broadcast types, which are not designed for precision tuning. The flimsy construction and large mass of such units again lead to mechanical stability problems.

In addition, this large amount of capacity is extremely sensitive to humidity changes because the major portion of the dielectric is air. A gentle breath into the tuning capacitor of the high "C" VFO can cause a frequency shift of several hundred cycles. While the average ham doesn't make a practice of breathing into his VFO, changes in the humidity content of the shack can cause short-term instability, particularly on "muggy" summer days.

The majority of high stability VFO's require some degree of temperature compensation and here again, the capacitively tuned oscillator is at a disadvantage because perfect compensation can be obtained at only one setting of the tuning capacitor. This problem is minimized in the inductively tuned circuit because the amount of capacity in the circuit remains fixed.

Most of the above mentioned problems are licked in this VFO exciter through use of an inductively tuned high "C" Colpitts oscillator tuned with a Mallory "Inductuner."

Amateurs with a background in television will recognize the Inductuner as the front-end tuning device used in many TV receivers manufactured ten years or so back. The tuner was manufactured in two, three and four section units and was used to provide continuous tuning of the TV and FM spectrum from 54 to 220 Mc. Each section of the tuner consists of a spirally wound, silver plated inductance firmly imbedded in low-loss plastic.

A silver plated slider driven by the tuning shaft rides along the inductance under tension. The excellent high frequency electrical and mechanical characteristics of this tuner make it ideal for use in a VFO and enable relatively simple construction of a tuned circuit which results in superb stability.

At first glance it would seem this VHF tuner could not possibly have enough inductive range to be useful at the lower frequencies at which VFO's generally operate. The high "C" Colpitts circuit, however, requires very little inductance, even in the two megacycle range. Each section of the Inductuner has a maximum inductance of approximately .8 microhenries and in the circuit shown one section of the tuner is used in conjunction with a fixed inductance and fixed capacitors to cover the 1.75-2.0 Mc. range. By properly proportioning the fixed inductance and capacitors the desired range is made to occupy almost the complete six turn tuning spread of the Inductuner as shown in Fig. 1.

Some form of turn counting type dial is required for the Inductuner. The dial shown in the photographs is a Model 1320 series Microdial manufactured by Borg Corporation, Janesville, Wisconsin. This dial has provisions for ten turns broken down into 100 divisions per turn, and while it was designed for *Micropots*, it works fine in this application.

The two section Inductuner in the unit shown in the pictures was salvaged from an old TV booster. Most TV receivers employing this unit were equipped with the three section unit and some scrounging in the back rooms and basements of TV service shops should turn up this little gem. It may also be available on the surplus market. While only one section is used in this particular design there is no reason why two or more sections cannot be connected in series or parallel to provide more

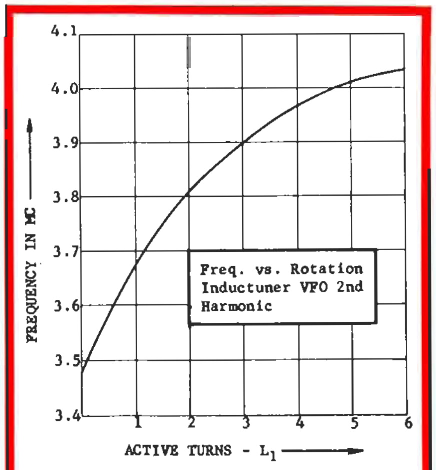

FIG. 1. TUNING CURVE for the inductive-tuned oscillator as constructed by K9ODE.

FIG. 2. SCHEMATIC DIAGRAM of the bandswitching exciter designed and built by K9ODE. The inductive-tuned oscillator circuit is shown at the left. Description of components is given in TABLE I — PARTS LIST, at the right. Capacitances are in micro-microfarads (MMF), or in microfarads (MFD), as marked. All bypass capacitors are disc ceramic or mica, 600 volts working. Resistances are in ohms, ½-watt rating, unless otherwise marked. **CAUTION:** Do not apply 150 volts to terminal 5 before 300 volts are applied to terminal 6.

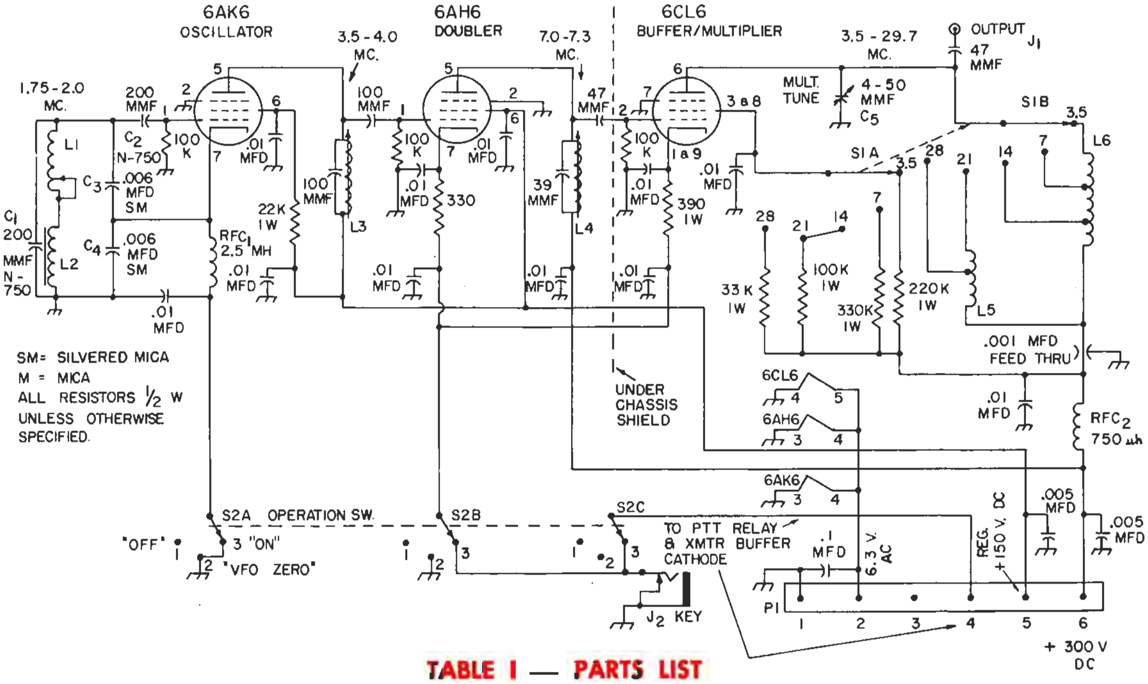

TABLE I — PARTS LIST

C1, C2	200-mmf. ceramic temperature compensating capacitor, negative 750 parts per million (Centralab type TCN).
C3, C4	0.006-mfd. mica, made from three 0.002-mfd. mica capacitors connected in parallel; see text.
C5	4 — 50-mmf variable.
J1	chassis type coaxial cable jack.
J2	closed circuit type phone jack.
J3	6-pin male chassis-type power connector (Jones P-306-AB).
L1	One section of Mallory spiral type 6-turn VHF Inductuner.
L2	14 turns, No. 22 enameled wire on toroid form cut from Command Set transmitter plate coil tuning slug;[1] see Fig. 3.
L3	20-uh. slug-tuned coil (Miller No. 4407, or CTC X2060-5).
L4	12-uh. slug-tuned coil (Miller No. 4406, or CTC X2060-4).
L5	27-microhenry coil, 58 turns, No. 22 enameled wire ¾ of an inch in diameter, closewound 1⅝ inches long, tapped at 22 and 7 turns from bypassed end.
L6	0.8 microhenry coil, 11 turns, No. 18 enameled wire ½ inch in diameter, spacewound diameter of wire 1 inch long, tapped at 6 turns from bypassed end.
RFC1	2.5-millihenry 3-pi RF choke.
RFC2	750-microhenry 1-pi RF choke.
S1	Five-position, two-pole rotary tap switch with ceramic insulation (Centralab type 2002, or equivalent).
S2	Three-position, three-pole rotary tap switch (Mallory type 3243J, or equivalent).

or less tuning range or bandspread for different bands. For mobile applications and others where space is a problem it is possible to cut away all but the first section of the tuner.

THE SCHEMATIC DIAGRAM for the inductive-tuned VFO is shown in Fig. 2. The tube line-up consists of a 6AK6 pentode oscillator with the grid circuit tuning 1.75 — 2.0 megacycles, and plate circuit doubling to 3.5 — 4.0 megacycles. This drives a 6AH6 doubler on 7 megacycles which in turn drives the 6CL6 multiplier. Although drive to the 6CL6 is at 7 megacycles, enough 3.5 megacycle energy sneaks through to permit the 6CL6 to deliver plenty of output on this band. The 6CL6 operates straight through on 7 megacycles and multiplies as required to hit 14, 21, and 28 megacycles. To equalize output one section of the bandswitch is used to select 6CL6 screen resistors of appropriate values. If desired, a potentiometer can be substituted in the screen to permit continuous output control.

Those accustomed to strings of multiplier tubes may raise eyebrows at the sight of a single 6CL6 tripling and quadrupling to provide output on 21 and 28 megacycles. The high transconductance of this tube makes it an extremely efficient multiplier, however, and the circuit, as shown, easily drives a 6L6 buffer on all bands. With voltages and constants shown in the schematic diagram, the 6CL6 operates well within its maximum plate dissipation rating and considerably more output can be obtained by reducing the value of the cathode resistance.

The control circuit switching arrangement permits the oscillator to run continuously. An S2 signal is heard from the oscillator on the 80 meter band and this can be cut off, if necessary, by throwing the control switch to "OFF."

The exciter is keyed in the doubler, multiplier and external buffer cathode circuits. If desired, the keying circuit can be adapted to a differential keying system. The current transmitter driven by this exciter consists of a 6L6 buffer driving four 6146's in DSB and when this mode of operation is used the push-to-talk relay also keys the exciter. For frequency spotting, the control switch activates the exciter stages only.

The fixed inductance used in conjunction with the Inductuner is a home-made toroid wound on a toroid form sliced from a Command transmitter tuning slug as described by W0PME.[1] Dimensions of the core are shown in Fig. 3. Although a conventional coil wound on a ceramic form can be used in place of the toroid, the toroid is strongly recommended because its smaller mass and electrical field contribute to both electrical and mechanical stability.

(continued on page 6)

---

[1] "Not Just a Novelty," by Davis A. Helton, QST, January, 1961, Pages 21 to 25.

FRONT PANEL VIEW of K9ODE's inductive-tuned exciter. The counter type tuning dial is described in the text. The panel is 9⅞ inches wide, and 5 inches high, to fit a cabinet that Jack had on hand.

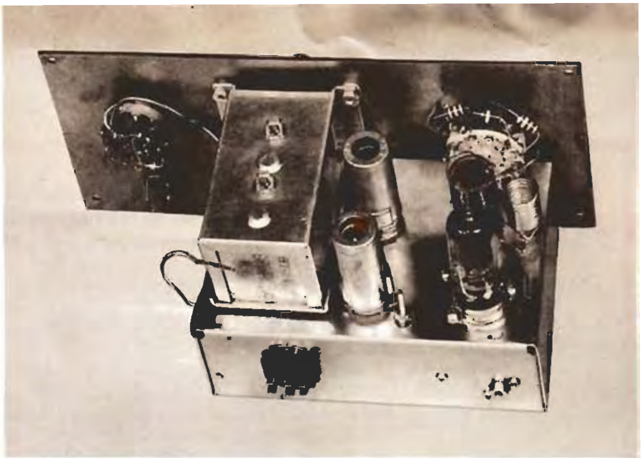

TOP VIEW of the exciter, showing the Inductuner with shields in place at hte left. Coils L_5 and L_6 for the 6CL6 output stage are mounted on small pillar insulators fastened to the chassis.

INDUCTIVE TUNING

(continued from page 5)

CONSTRUCTION of the complete VFO-exciter was accomplished on a standard 4 x 6 x 2-inch deep aluminum chassis (*Bud* AC-431, or equivalent). The odd-size panel on K9ODE's model shown in the pictures was made to fit an available cabinet in which the unit was housed. Major parts were fastened in the locations shown in the chassis diagram, Fig. 4.

By following good construction practices the aluminum chassis will be found to be adequate for excellent mechanical stability inasmuch as the rugged Inductuner eliminates most of the common mechanical problems. All frequency components should be mounted on *one surface* of the chassis so that flexing of the chassis sides will not change their relative positions. As hammered home many times: anchor everything solidly!

All wiring and components in and around the oscillator circuit should be cemented or waxed to the chassis to prevent movement and vibration. The author used low melting point wax of the type used to impregnate coils. It is easy to flow around components and does a good job of holding things in place.

TUNEUP — With the components shown in TABLE I — PARTS LIST the VFO tuning range will be close to 1.75 — 2.0 megacycles. Some adjustment of inductance or capacity may be required. A considerable variation in toroid inductance can be made by simply spreading or compressing the turns on the form. To increase the tuning range, reduce the inductance by spreading the toroid turns. This will also move the range higher in frequency and it may be necessary to add fixed capacity across the inductances to bring the range down to the desired frequency. If the frequency spread is too great, increase the toroid inductance and decrease the fixed capacity across the inductances to bring the range back to the desired frequency.

The slug-tuned coils used in the oscillator plate and doubler plate circuits were made from a 4.5-megacycle interstage transformer found in the junk box. Standard commercial counterparts can be used, of course.

The 6CL6 plate circuit components are tailored to take into consideration the capacity introduced by 18" of RG58U cable feeding the grid of a 6L6 stage in the transmitter. If a short, direct connection is used from the 6CL6 plate to the following grid, the inductances will have to be increased in value to resonate at the desired bands. If low impedance output is required, links can be wound over the plate coils and switched by an additional section of the bandswitch.

PERFORMANCE — Many tests of the high "C" Colpitts oscillator show that short-term instability, or drift, is caused by two factors. The first is RF heating of the voltage divider capacitors which results in approximately 200 cycles positive (lower frequency) drift during the first ten minutes of operation.

The second cause is thermal heating of the tuned circuit caused by heat from the oscillator tube socket reaching these components via the connecting leads. This second effect can be minimized by using an oscillator circuit and tube which require a minimum of heater and plate power. In addition, components are located far enough away from the socket to prevent efficient thermal transfer. This thermal heating effect is most pronounced on the inductance in the tuned circuit and in this design the Inductuner plus the toroid are positioned so very little, if any, heat can be conducted to them from the oscillator tube socket.

Heating of the voltage divider

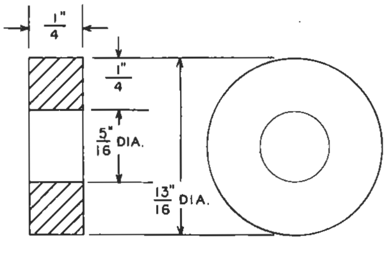

FIG. 3. DIMENSIONS of toroid coil core used for oscillator inductance L_2. Material is powdered iron.

G-E HAM NEWS

presents **HOW-TO-DO-IT IDEAS**
from the 999 radio amateurs at
GENERAL ELECTRIC

A bi-monthly publication of the RECEIVING TUBE DEPARTMENT
Owensboro, Kentucky, U. S. A. • Editor — E. A. Neal, W4ITC

G-E HAM NEWS is available free from authorized G-E Tube distributors. Some distributors mail copies locally to their customers.

A low-cost direct-mail subscription plan is available to persons residing in the United States and its possessions (including APO and FPO numbers). Subscription rates are:

One Year (6 issues)	$1.00
Two Years (12 issues)	$2.00
Three Years (18 issues)	$3.00
Five Years (30 issues)	$4.00

Enclose check or money order for U. S. currency for the proper amount above made payable to "General Electric Company."

Residents of Canada may subscribe to **G-E HAM NEWS** for $1.00 per year from the Canadian General Electric Company, Ltd., Electronic Tube Marketing Section, 189 Dufferin Street, Toronto 3, Ontario, Canada. Enclose check or money order made payable to: "Canadian General Electric Company, Ltd."

Distribution of **G-E HAM NEWS** in more than 40 foreign countries is handled through the International General Electric Company. A listing of outlets is available from the **G-E HAM NEWS** office. Or, write to: Customer Inquiry Section, International General Electric Company, 150 East 42nd Street, 7th Floor, New York 17, New York, U. S. A.

capacitors from RF energy can be minimized by using the lowest possible voltages on the oscillator but despite this precaution some heating and drift are inevitable. Various types and makes of mica and silver mica capacitors were tried and despite popular belief, some silver mica capacitors were no better than conventional micas in this application. A slight improvement was noted by paralleling several capacitors to provide the required 0.006 mfd. of capacitance. This VFO parallels three .002-mfd. capacitors for each of the voltage dividing capacitors.

The drift problem was licked in conventional fashion by the use of temperature - compensating capacitors in the oscillator grid-coupling and tuned circuit. These reduce the drift to less than 30 cycles at the fundamental frequency.

If you don't want to bother with temperature compensation you can still rate your VFO as manufacturers do by saying, "drift is negligible after ten minutes warmup." However, the true test for short-term VFO stability is the amount of drift measured from the moment plate power is applied, after two minutes of heater warmup. After all, the fellow at the other end doesn't wait ten minutes for your VFO to warm up before he starts to copy you!

Aside from the afore-mentioned drift considerations, the Inductuner VFO eliminates "pussyfooting" on the operating table. Even on 28 megacycles the VFO can be rapped sharply with no detectible change in beat-note — provided the oscillator components have anchored down. The Inductuner completely eliminates frequency variations usually found in the average home-built VFO where a push on the front panel shifts frequency.

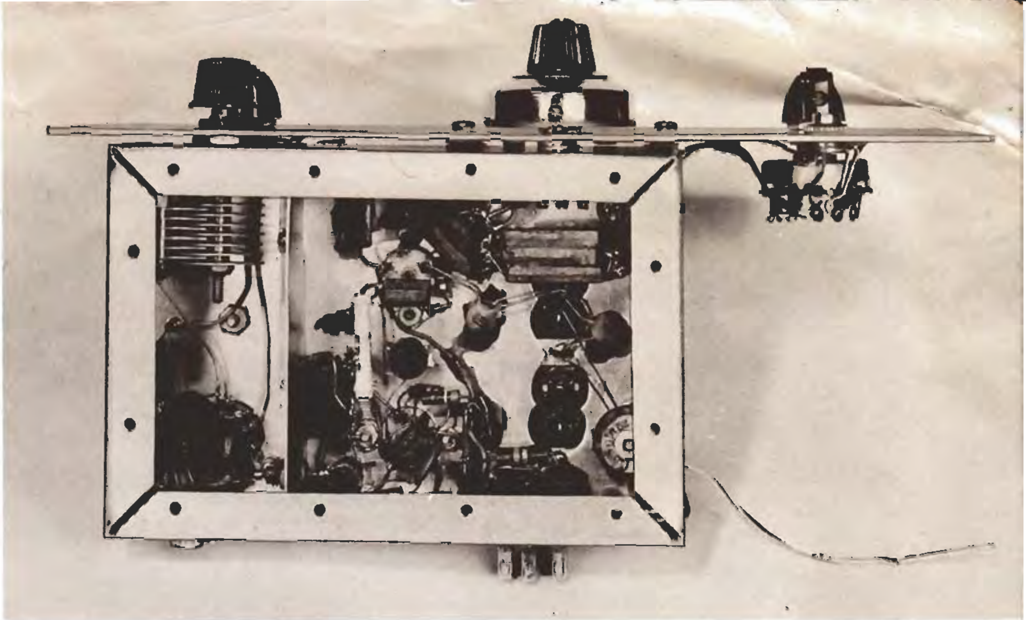

BOTTOM VIEW of the exciter, showing placement of smaller parts around the major components, locations of which are shown in Fig. 4 below. Note the two groups of three 0.002-mfd. mica capacitors in parallel for C_3 and C_1. The toroidal coil, L_2, shown at the lower right corner, fastened to the chassis with insulating spacer washers and a brass machine screw. Bottom plate covers chassis for shielding.

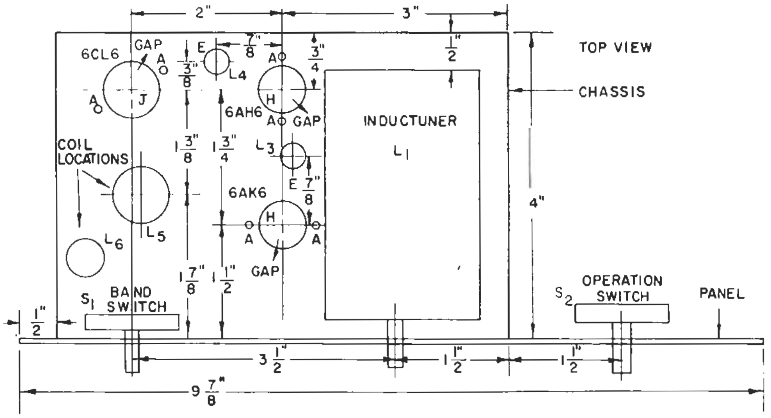

FIG. 4. CHASSIS LAYOUT DIAGRAM for the inductive-tuned VFO exciter. Locations for coils L_5 and L_6 are also shown. Holes marked "A" are No. 31 drill for No. 4 machine screws; those marked "E" are $\frac{9}{32}$ of an inch in diameter for the mounting studs on L_3 and L_4.

TRANSMITTER PROTECTIVE CIRCUITRY

(continued from page 3)

THE COMPLETE POWER SUPPLY for the transmitter at W7KCS is shown in the schematic diagram of Fig. 4. Note that all of the foregoing features have been included in this circuit. Power is fed into the power supply through a 3-prong AC line plug whch provides for automatic grounding of the transmitter cabinet and chassis. A time-delay switch is included in the high voltage supply primary circuit to provide 60 seconds delay after the GL-3B28 filaments are energized, before the high voltage transformer can be energized.

Good construction practice should be followed in this unit, including adequate insulation in high voltage circuits, fastening small parts securely to prevent movement, etc. The photographs of W7KCS's transmitter and power supplies on these pages show many of these construction details. Readers are also referred to the "Power Supply Construction" chapter of the ARRL *Radio Amateur's Handbook* for further suggestions.

Although W7KCS's protective circuits have been utilized in his AM transmitter, they are also excellent for the bias, screen grid and plate voltage power supplies for linear amplifiers. They can be easily added as subassemblies to existing power supplies.

It's smart to protect the lives of your transmitting tubes — not to mention your own life — by including these simple, but effective circuits in your transmitter.

CONTROL CIRCUIT VOLTAGE is measured by Norm Morgan checking the protective circuits in his transmitter. Note that all parts are firmly fastened to chassis.

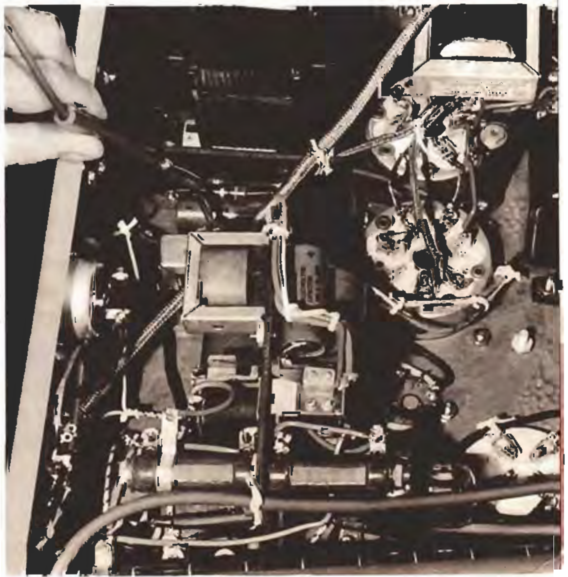

SCANNING THE SPECTRUM

MEET RADIO AMATEURS AMONG G-E TUBE DISTRIBUTORS

Picture courtesy of *Cleveland Plain Dealer*

HARRY A. TUMMONDS, W8BAH, owner of *Northern Ohio Laboratories* in Cleveland, Ohio, recently received the 1961 Public Service Award of the Ohio Council of Amateur Radio Clubs at the Dayton Hamvention. The award plaque reads, "Presented to Harry A. Tummonds, W8BAH, by the Ohio Council of Amateur Radio Clubs for Meritorious Journalistic Public Relations on Behalf of Amateur Radio, April 29, 1961."

Harry recently completed two years of writing a weekly newspaper column on amateur radio, "Ham Antenna," for the *Cleveland Plain Dealer*.

An enthusiastic amateur since 1920, Harry specializes in distributing amateur radio equipment, and sees that his customers regularly receive copies of *G-E HAM NEWS*.

COMING NEXT *TWO* ISSUES

"The LWM-3 — A Bandswitching SSB Mobile Transceiver," by W. C. (Bill) Louden, W8WFH, and A. F. (Al) Prescott, W8DLD, co-authors of the *G-E HAM NEWS* series on high-power mobile radio systems last year. This compact transceiver — 13 inches wide, 6 inches high, and 11 inches deep — attracted great attention at several amateur radio conventions during 1961. The LWM-3 (the letters stand for "Louden, William, Mobile — 3rd model") covers any eleven 200-kilocycle segments of the amateur bands between 3.5 and 29.7 megacycles. Bill's model, shown here, delivers about 5 watts PEP output, sufficient to drive his mobile linear amplifier described in the November-December, 1960 issue of *G-E HAM NEWS*.

In order to completely cover the LWM-3, the circuit and other electrical details will be run in the November-December, 1961 issue, with the mechanical and constructional details to follow in January-February, 1962.

ANNOUNCING G-E HAM NEWS 3RD BOUND VOLUME

COMPILATION of the *3rd Bound Volume* of *G-E HAM NEWS* has been finished and the completed books are being shipped from our bindery starting in September. This 340-page book contains copies of all issues from January-February, 1956 (Vol. 11, No. 1), to November-December, 1960 (Vol. 15, No. 6), totalling 260 pages.

In addition, the 3rd Bound Volume contains an *80-page supplement* with additional information, circuits and comments on many of the articles in the above issues; and a Cross Index of all articles published in *G-E HAM NEWS* from 1946 (Vol. 1) to the end of 1960 (Vol. 15).

The price to radio amateurs in the United States and possessions is $3.00, postpaid. The *3rd Bound Volume* should be ordered from the *G-E HAM NEWS* office, and remittance payable to "General Electric Company" enclosed with order.

In Canada, order the book from Canadian General Electric at the address shown on page 6 of this issue. Price of the book in Canada is $3.50, postpaid.

Persons in other countries should order the *G-E HAM NEWS* 3rd Bound Volume from International General Electric at the address in New York City given on page 6. Price of the volume from IGE is $3.50, postpaid.

ANNOUNCING 10TH ANNUAL EDISON RADIO AMATEUR AWARD

NOMINATIONS for the 1961 Edison Radio Amateur Award are now open. This year marks the tenth anniversary of General Electric's annual Edison Award, established in 1952.

The Award is presented annually to a licensed radio amateur who, while pursuing his or her hobby within the limits of the United States, has performed an outstanding and meritorious public service in behalf of a group, the general public, or an individual.

Full details on the Award, and nominating candidates, are available from the *G-E HAM NEWS* office. Compile the public service record of your candidate now and mail it well before the deadline, January 2, 1962.

HAM NEWS

Available **FREE** from your G-E Tube Distributor

SEPTEMBER-OCTOBER 1961
VOL. 16, NO. 5

TUBES
HAM NEWS

JANUARY-FEBRUARY, 1962

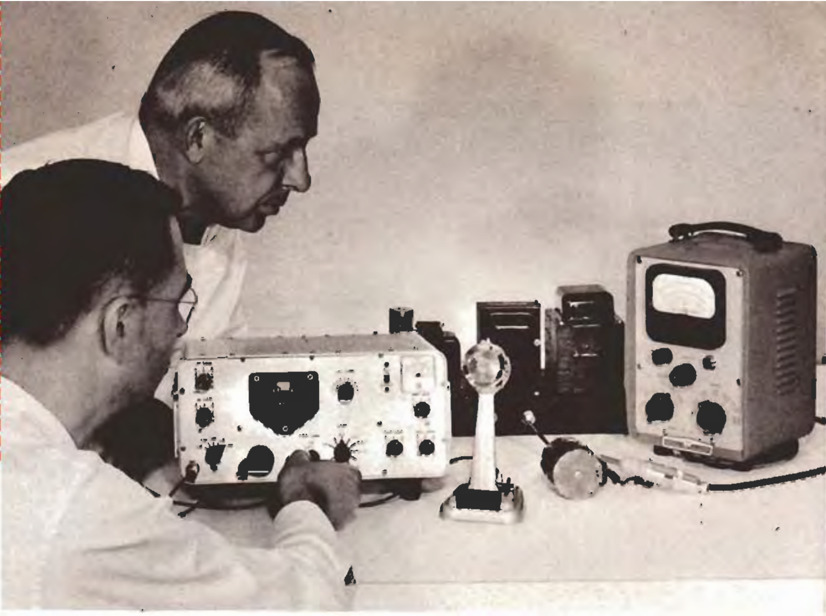

W8WFH (front) and W8DLD run power output tests on the completed LWM-3 SSB/CW transceiver, running it into a 50-ohm dummy antenna load. Vacuum-tube voltmeter is measuring RF voltage across load, providing power output indication.

THE LWM-3

A BANDSWITCHING SSB MOBILE TRANSCEIVER
PART II—MECHANICAL DETAILS

By W. C. Louden, W8WFH, and A. F. Prescott, W8DLD

PART II of the LWM-3 transceiver article covers the complete mechanical and constructional details. Also described is the procedure for initial alignment of all circuits requiring it, and the tuneup for normal operation of the transceiver once adjustment is completed. The LWM-3 as described by W8WFH and W8DLD is a compact neat package of advanced electronic circuitry that is ideal for both mobile and home-station operation. Also, W8WFH's model has a single main chassis plate; amateurs who duplicate the LWM-3 may prefer to unitize the various sections into subassemblies. This type of construction probably will result in a somewhat larger over-all size for the LWM-3, since extra space is needed where subassemblies join together. However, unitized construction is the option of the builder; the LWM-3 as described applies to the methods used by W8WFH on his model.

LAYOUT

In positioning parts on the chassis, thought must be given to orienting the sockets so that short leads may be used to minimize stray coupling. Also the tube sockets should be located to allow the arrangement of the curcuit components about them. The socket locations shown in the chassis layout diagram, Fig. 7, were selected for these reasons and, also, as mentioned in Part I of this article, to allow the location of the much-used controls on the left side of the panel near the operator in the driver's seat.

Those tubes such as the mixers which use common VFO and crystal RF voltages are mounted adjacent to one another. The 6BZ6 RF amplifier (V_9) is located so as to permit short leads to the slug-tuned coils (L_{208} and L_{209}). The first crystal oscillator tube (V_{10}) is located to minimize lead lengths to the crystal switching sections of the bandswitch (S_2). The same basic idea is carried throughout the entire chassis layout.

It is recommended that the given chassis layout be used as a minimum of stray coupling difficulties was encountered with it.

CHASSIS AND CABINET CONSTRUCTION

The chassis was constructed of $\frac{3}{32}$-inch thick aluminum to provide a rugged mounting for the parts. It is desirable to use this heavy material for two reasons: 1) It can be drilled and tapped for mounting parts; and 2) It will not flex to any great extent and thus deform the VFO and cause frequency shift.

Holes are punched in the chassis while it is still a flat sheet, using the chassis layout diagram, Fig. 7, as a guide. Although hand punches and drills can be used, a punching machine, if available, saves hours of building time. Flanges ½-inch wide are then formed on all four sides with a sheet metal brake. The front and back edges were bent up and the two sides bent down. The small edges were used rather than a standard chassis design to facilitate the mounting of the many small parts. The builder may then work not only from the bottom of the chassis but also from the edges.

(Continued on page 2)

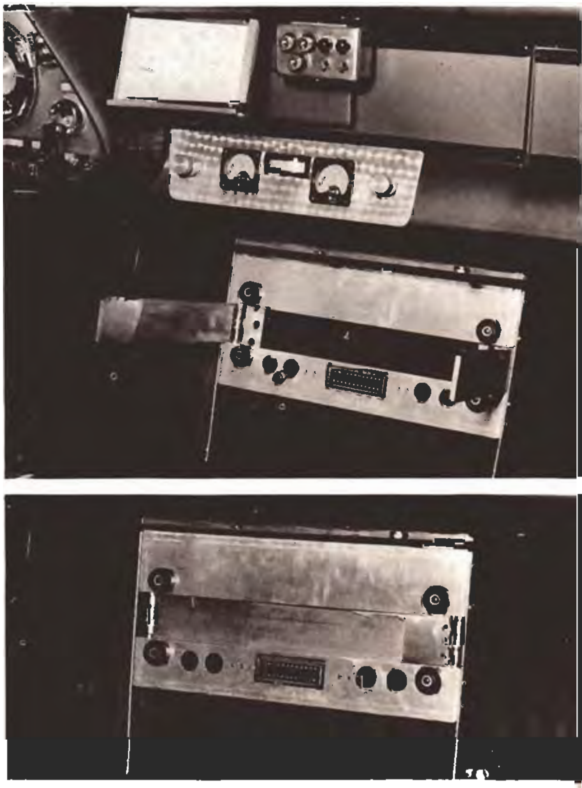

MOUNTING RACK for mobile operation of the LWM-3 transceiver in W8WFH's car. Hinged mounting arms (open in top view) slip into "pockets" on each side of LWM-3 cabinet, providing "slip in — slip out" removal of transceiver from car, and shock-resistant mounting. Arms fold (lower view) out of way of center passenger in front seat when LWM-3 is removed. All power and control connections to LWM-3 are made through 24-pin jack in middle of rack, matching similar type plug on rear of cabinet. Meters and indicator lights above transceiver mounting rack show performance of 3-phase AC mobile power system.

IN THIS ISSUE

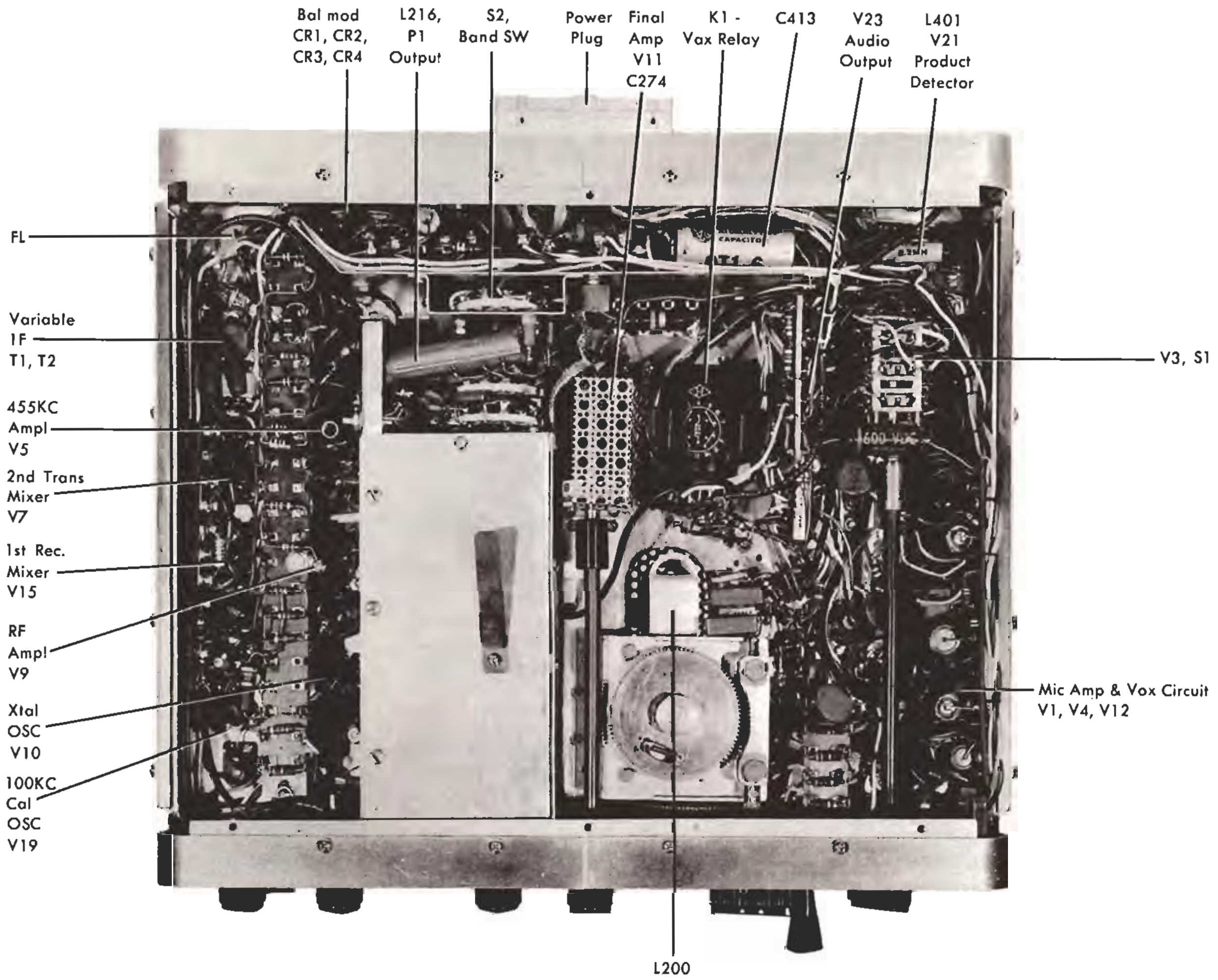

BOTTOM VIEW OF THE LWM-3, showing the over-all assembly. Covered section contains coils L_{208} and L_{209}, plus all of the trimmer capacitors and bandswitch sections (S_{2C} and S_{2D}) associated with these tuned circuits in the RF amplifier/driver stage (V_9). MODE SELECTOR switch (S_1) is in upper right corner. Transmitter and SSB generator sections are at left. Audio and VOX section is in right front corner, and receiver section runs along rear of chassis. Most small components — except RF bypass capacitors, which are mounted directly on tube sockets — have been mounted on narrow terminal boards as subassemblies for maximum rigidity and compactness.

HAM NEWS

presents **HOW-TO-DO-IT IDEAS**
from the 999 radio amateurs at
GENERAL ELECTRIC

A bi-monthly publication of the RECEIVING TUBE DEPARTMENT
Owensboro, Kentucky, U. S. A. • Editor — E. A. Neal, W4ITC

G-E HAM NEWS is available free from authorized G-E Tube distributors. Some distributors mail copies locally to their customers.

A low-cost direct-mail subscription plan is available to persons residing in the United States and its possessions (including APO and FPO numbers). Subscription rates are:

One Year (6 issues)......................................$1.00
Two Years (12 issues)...................................$2.00
Three Years (18 issues)..................................$3.00
Five Years (30 issues)...................................$4.00

Enclose check or money order for U. S. currency for the proper amount above made payable to "General Electric Company."

Residents of Canada may subscribe to **G-E HAM NEWS** for $1.00 per year from the Canadian General Electric Company, Ltd., Electronic Tube Marketing Section, 189 Dufferin Street, Toronto 3, Ontario, Canada. Enclose check or money order made payable to: "Canadian General Electric Company, Ltd."

Distribution of **G-E HAM NEWS** in more than 40 foreign countries is handled through the International General Electric Company. A listing of outlets is available from the **G-E HAM NEWS** office. Or, write to: Customer Inquiry Section, International General Electric Company, 159 Madison Avenue, New York 16, New York, U. S. A.

THE LWM-3 (Continued from page 1)

The sides, front and back panels are screwed to the chassis with 4-40 x ¼-inch long machine screws. During preliminary debugging of the transceiver the sides and back were removed. A dummy front panel was used to support the controls. After the circuits are working properly, the sides, front and back panels are screwed into place.

The over-all size and constructional details of the cabinet are shown in Fig. 8. The curved shapes of the four corners of the perforated aluminum cabinet were formed by carefully bending the metal around a 1-inch wood dowel. The metal was clamped between the dowel and a wood bench top and bent first by hand. The curve was then smoothed with a plastic mallet.

The ¾ x 1/16-inch aluminum strips which form the front and back lips of the cabinet were formed in the same manner. The strip was first cut longer than necessary and trimmed after forming without a gap at the junction of the two ends. Small aluminum angle strips were made from 1/16-inch sheet stock to fasten the strips to the front and back panels and to provide an edge for fastening the perforated covers. The complete cabinet assembly was fastened together with Phillips head 4-40 x ¼-inch long machine screws.

The front panel should next be fitted to the cabinet and then punched and drilled for the various controls as shown in Fig. 9. The dial opening may be cut with 1¼-inch diameter socket hole punches at the corners, then sawing between these holes. A half-round file is used to smooth the edges.

The dial escutcheon is made from ¼-inch thick aluminum, drilled and filed to shape as shown in Fig. 10. It was then painted with flat black lacquer. Assembly details of the dial plate and dial cover are shown in Fig. 11. A command set transmitter dial plate is cut down to 2 inches in diameter, and a disc of $\frac{1}{16}$-inch thick clear lucite plastic is riveted to it.

The dial cover also is of $\frac{1}{16}$-inch clear plastic. Note in the dial detail photo on page 6 that the dial cover is fastened to the escutcheon with a 6-32 machine screw. A simple zero-adjustment is made by using a small "wire nut" as a knob on the front of the dial escutcheon. A ¼-inch diameter rubber grommet is fastened to the wire nut with a flat-head machine screw. The grommet then drives the rim of the dial cover and thus moves the hairline.

CIRCUIT WIRING

Construction should begin with the packaged VFO unit. The VFO should oscillate with satisfactory frequency stability before proceeding further with construction. All frequency determining components — L_{200}, L_{201}, C_{202}, C_{203}, and C_{204} — are mounted directly on the frame of the oscillator tuning capacitor (C_{205}), as shown in the top and bottom views. The command transmitter tuning capacitor selected was from a 2.1-3 Mc Navy T19/ARC-5. The capacitor has the gear reduction and dial mechanism mounted on its frame.

It had 16 rotor plates originally, but 6 plates were removed to allow the VFO to tune from 2.5 to 2.7 megacycles. Start by removing only 4 plates, and additional plates may be removed as desired to cover the proper range. The capacitor is mounted with solid brackets to the chassis, one on each side. Each is 2 inches wide and is fastened with two 6-32 screws to the chassis at one end and two to the capacitor at the other end. Do not allow the tuning shaft to rub the panel, or any other intermittent grounds to occur, as this may cause a small frequency shift in the VFO when the unit is subjected to vibration.

The RF amplifier (V_9) and high frequency (V_{10}) crystal oscillator are completed next. The band switch and slug tuned coil layout will depend upon the mechanism used to move the tuning slugs. The permeability tuning and push-button head from an old auto radio is used to move the tuning slugs in L_{206} and L_{209}. This one was from a Delco radio, vintage about 1952. However, other model auto receivers have similar units. All parts were removed except the bracket which contains the bearings and the bar and shaft which move the slugs. The ladder-like appearance of the unit was the original mounting for the push buttons.

(Continued on page 4)

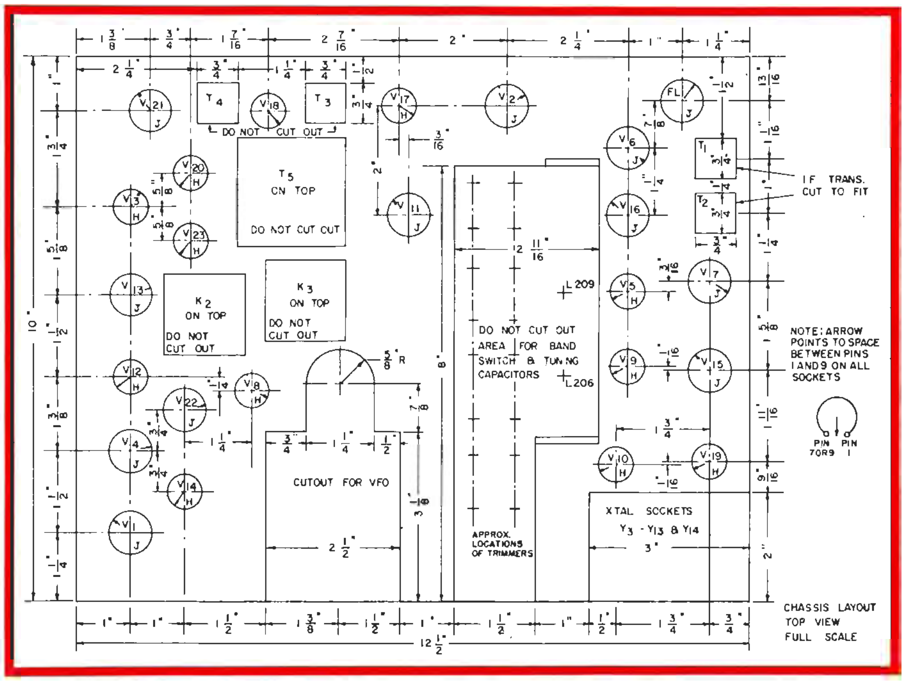

FIG. 7. CHASSIS LAYOUT DIAGRAM for the LWM-3 transceiver as constructed by W8WFH. Material is 3/32-inch thick sheet aluminum. Precise locations of the small trimmer capacitors will depend on the size of the slug mechanism. Position of the blank on each tube socket is indicated by the arrow. A 9-pin miniature tube socket is required only for a Collins "J" type filter (right rear corner). Type "E," "F" and "Y" filters require other mounting means.[3]

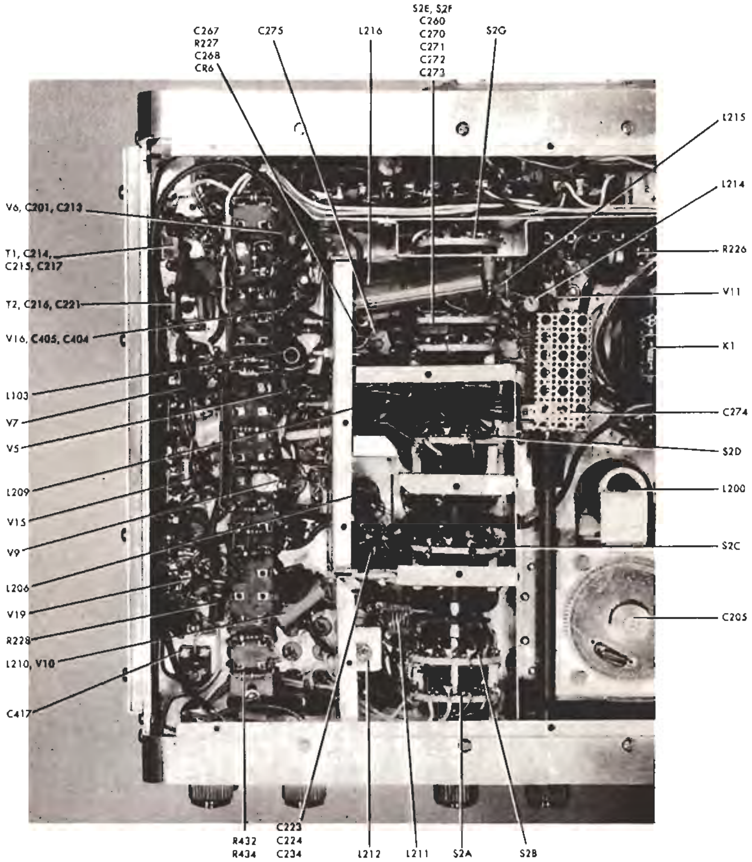

BANDSWITCH SECTION OF LWM-3 showing, front to back, the crystal oscillator (V_1), RF amplifier/driver (V_9), and output amplifier (V_{11}) sections. Tubes and other circuit elements associated with the SSB generator and transmitter sections (upper half of block diagram, Fig. 1, on page 2 of November-December, 1961 issue) are located along the left hand edge of the chassis.

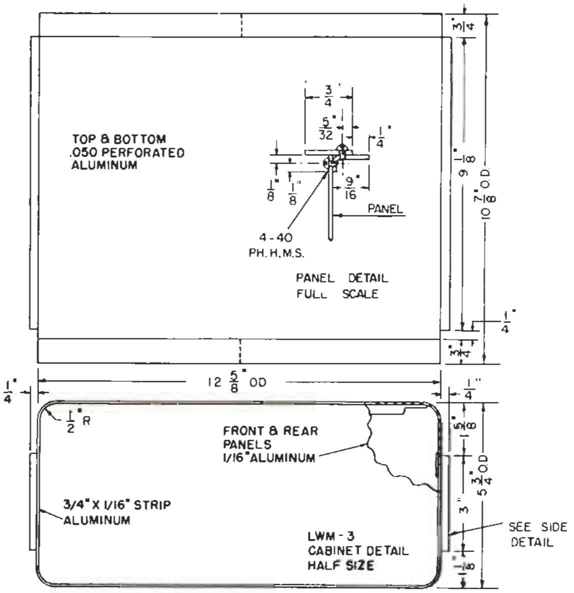

FIG. 8. CABINET ASSEMBLY DRAWING for a custom-made cabinet. Material is 1/32-inch perforated aluminum sheet. Front and rear lips are ¾ x $\frac{1}{16}$-inch thick aluminum strip. Do-it-yourself aluminum, available in hardware stores, was used.

TABLE III—CRYSTAL CHART

OUTPUT BAND, MC.	BANDSWITCH POSITION	CRYSTAL FREQUENCY, MC.	CRYSTAL OUTPUT FREQUENCY, MC.
3.4 — 3.6	1 & 2	6.555	6.555
# 3.5 — 3.7	1 & 2	6.655	6.655
3.6 — 3.8	1 & 2	6.755	6.755
# 3.8 — 4.0	1 & 2	6.955	6.955
7.0 — 7.2	3	10.155	10.155
# 7.1 — 7.3	3	10.255	10.255
7.2 — 7.4	3	10.355	10.355
#14.0 — 14.2	4 & 5	8.5775	17.155
#14.15 — 14.35	4 & 5	8.6525	17.305
14.2 — 14.4	4 & 5	8.6775	17.355
15.0* — 15.2	4 & 5	9.0775	18.155
#21.0 — 21.2	6 & 7	12.0775	24.155
21.2 — 21.4	6 & 7	12.1775	24.355
#21.25 — 21.45	6 & 7	12.2275	24.455
21.4 — 21.6	6 & 7	12.2775	24.555
#28.0 — 28.2	8 thru 11	15.5775	31.155
28.2 — 28.4	8 thru 11	15.6775	31.355
28.4 — 28.6	8 thru 11	15.7775	31.555
#28.5 — 28.7	8 thru 11	15.8275	31.655
#28.7 — 28.9	8 thru 11	15.9275	31.855
#28.9 — 29.1	8 thru 11	16.0275	32.055
#29.1 — 29.3	8 thru 11	16.1275	32.255
29.3 — 29.5	8 thru 11	16.2275	32.455
29.5 — 29.7	8 thru 11	16.3275	32.655

*Only for reception of WWVI #Recommended ranges.

THE LWM-3

(Continued from page 3)

The small ceramic trimmer capacitors in the grid and plate circuits of V_9 are mounted in a compact grouping to minimize lead lengths and space required for the tuner. Extensive shielding is used between grid and plate sections of the switch and between the RF amplifier and other circuits, the crystal oscillator on one side and the final amplifier on the other. A ¼-inch fibre shaft is filed down and substituted for the original metal shaft in switch sections S_{2C} to S_{2G}. It is driven from switch S_{2B} with a flexible coupling.

The remainder of the receiver is then wired and the receiver tested as a unit (see alignment and tune-up procedure).

The transmitter is started by wiring the audio amplifier and vox section. This unit may be tested separately through the use of the tone oscillator and, of course, with voice signals from a crystal microphone. A small 1000 to 200,000 ohm matching transformer is necessary with a controlled reluctance microphone (see page 1 of Part I) to obtain sufficient voltage to drive the audio system.

The BFO isolation amplifier and balanced modulator can now be completed; and, to facilitate testing, the vox relay (K_1) may either be tied closed, or the relay tube (V_{13B}) biased to hold the relay closed.

The remainder of the transmitter circuits may be completed with the exception of the pi-network output capacitors (C_{269} to C_{273}).

CONSTRUCTION HINTS

Subminax cable (*Amphenol* No. 21-598) was used to carry RF voltages around the chassis from tube to tube. This cable has good low loss insulation and is small in diameter. Lapel microphone shielded cable was used to carry the audio voltages to the various controls. Number 22 and 24 insulated hookup wire is used for general circuit wiring. Small capacitors are essential to compact construction. Some circuits

BOTTOM REAR VIEW, showing the components in the receiver portion of the transceiver along the rear of the chassis. The back panel has been raised to reveal this section. Most small parts are mounted on two terminal boards which are fastened to a shield of $\frac{1}{16}$-inch thick aluminum running across the chassis. Note the shield across the 9-pin miniature socket for the mechanical filter at the left.

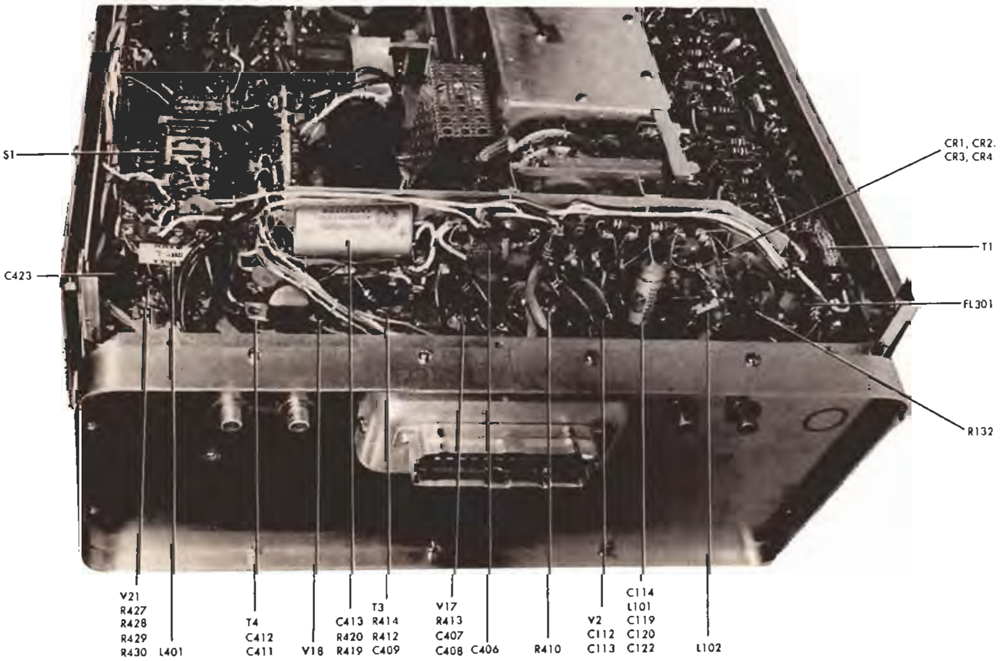

FOOTNOTES—LWM-3

[3] AVAILABILITY OF MECHANICAL FILTERS:

The Collins F455J-21 mechanical filter used in the LWM-3 is available through authorized Collins distributors at $57.50 each. Also available directly from Collins Radio are the F455E-21 and F455F-21 filters (horizontal type case with terminal on bottom) at $43.00 each, F.O.B. factory.

The F455Y-21 filter (small cylindrical type with terminals on ends, used in "S" line and KWM-2) is available both from the factory and authorized Collins distributors at $50.75 each.

For amateurs who prefer a 3.1-kilocycle bandwidth, a F455Y-31 filter is available directly from Collins Radio at $38.00, F.O.B. factory. For this filter, use a 453.1-kilocycle crystal at Y_1, and a 456.9-kilocycle crystal at Y_2.

Order F455E-21, F455F-21 and F455Y-31 filters from Collins Radio Company, Components Division, 3324 West Warner Avenue, Santa Ana, Calif. Include remittance with order. This information was supplied by Collins Radio Co. Prices and availability are subject to change without notice.

[4] Vector prepunched phenolic terminal boards and push-in terminals are listed on page 136 of 1962 catalog of Lafayette Radio Electronics, Inc. 111 Jericho Turnpike, Syosset, L. I., New York.

[5] Detailed information for checking frequency drift of VFO's is given in the "Stabilized Master Oscillators" chapter of Fundamentals of Single Sideband, by Collins Radio Company.

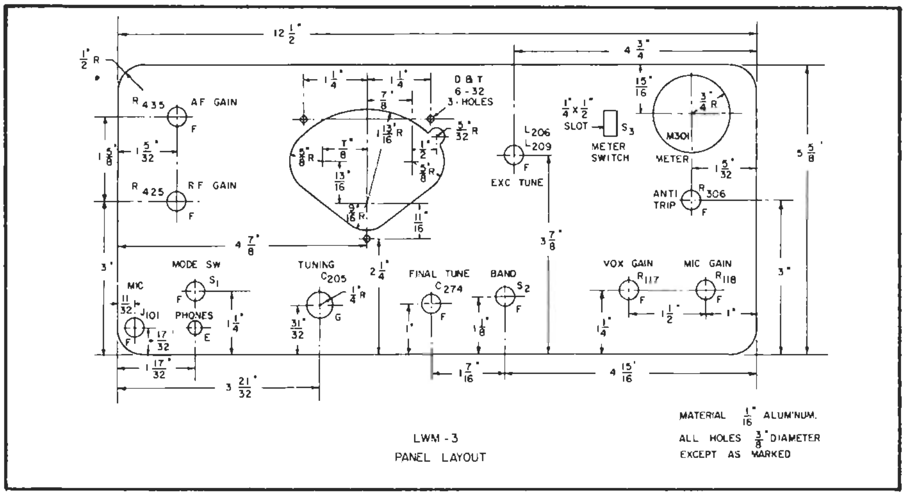

FIG. 9. PANEL LAYOUT DIAGRAM for the LWM-3 transceiver. The panel should not be drilled until locations of chassis components are finalized to avoid errors. The $\frac{1}{16}$-inch thick aluminum sheet can be left shiny, brushed, or etched to give the desired finish.

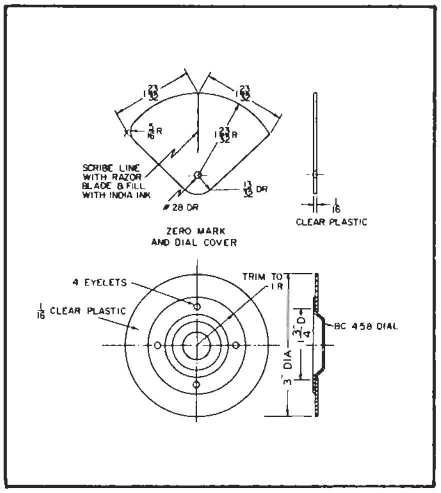

FIG. 11. DETAIL DRAWING of the dial cover and dial plate. The plate is made from a Command Set transmitter dial plate cut down to 2 inches in diameter to form a hub.

HOLE SIZE CHART

"E" drill—9/32-inch diameter.
"F" drill—3/8-inch diameter.
"G" drill—1/2-inch diameter.
"H" socket punch—5/8-inch diameter for 7-pin miniature tube socket.
"J" socket punch—3/4-inch diameter for 9-pin miniature tube socket.

were rebuilt a number of times as smaller components became available.

The perforated circuit board was found to be one of the most convenient and compact methods of mounting parts. The *Alden Products Co.* of 185 North Main Street, Brockton, Mass., and *Lafayette Radio Electronics*[4] both sell them. Small terminals for use with the boards may be purchased also; however, brass eyelets were set into the holes with a punch in a drill press. Some preliminary thought must be given to the layout of parts. However, all circuit soldering is done in the open.

Parts are mounted on one side and all wiring is done on the other; pigtails are provided on the board for connection to the tube sockets. It is a good idea to include a few extra terminals or eyelets on the board for last-minute changes, as it's more difficult to insert these after the board is in place. Small boards made in this manner were used to hold small parts for the output RF voltmeter circuit parts, and the input circuit capacitors for the RF amplifier. These were mounted in place by a single 6-32 stud, as shown in the bottom detail views.

ALIGNMENT AND TUNE-UP PROCEDURE

When preliminary work is being done on the VFO its output can be monitored using a separate receiver. For stability checks the fifth harmonic or higher should be used to quickly detect drift or frequency shift due to shock and vibration.[5]

The VFO dial can be calibrated from 0 to 200 by using a separate monitoring receiver and a 100-kilocycle crystal calibrator. If a calibrator with a 10-kilocycle divider is available, the 10-kilocycle divisions can be marked on the dial plate with a pencil, and the 5-kilocycle points added midway between them. By using harmonics of the VFO and monitoring then at higher frequencies, say 25 to 27 megacycles, 1-kilocycle calibration lines can be obtained. Five-kilocycle dial markings were found to be adequate on this model. Accurate initial calibration of the VFO dial will pay off later in good frequency resetability.

After marking the calibration lines on the dial plate, they can be scribed in and filled with black ink. Or, "Chart-Pak" cellulose tape may be used for the lines. Black decals are used for the numbers. After the dial plate is complete, spray it with a coat of clear lacquer to preserve the calibrations.

If a *Collins* "S" line receiver or transmitter, or KWM-2 transceiver, is available, the VFO in it can be used as a calibration source for the VFO in the LWM-3. Simply set the *Collins* gear dial to the 5-kilocycle intervals, starting at 2.5 megacycles, pick up the signal in a monitoring receiver, set the LWM-3 VFO to zero beat with it, and mark the calibrations on the dial.

The crystal oscillator can also be checked in the same manner as the VFO. A grid dip meter was used first

(Continued on page 6)

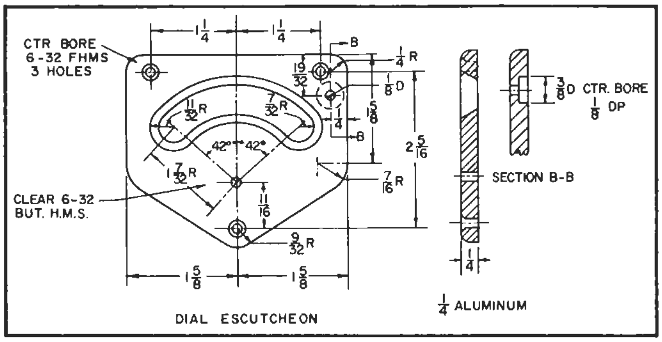

FIG. 10. DIAL ESCUTCHEON drawing for the LWM-3. Corners and dial opening are rounded with a file to desired contours before painting. The three mounting holes are counterbored to allow flat head machine screws to be flush with the surface.

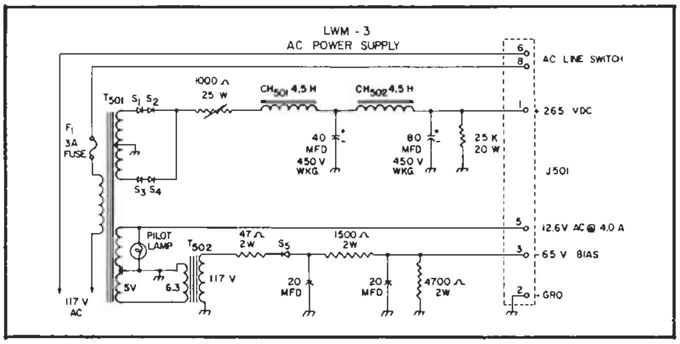

FIG. 12. AC POWER SUPPLY circuit for the LWM-3 transceiver. Chokes CH$_{501}$ and CH$_{502}$ are 4.5 henries at 200-milliamperes (Stancor C-1411). CR$_{501}$ to CR$_{505}$ are 600-PIV, 600-milliampere silicon rectifiers (G. E. 1N1697). CR$_{505}$ is a 200-PIV, 600-milliampere rectifier. T$_{501}$ has a 580-volt center-tapped winding at 240 milliamperes; with 5-volt, 3-ampere, and 12.6-volt, 5-ampere heater windings, 117-volt primary (Stancor P-8352). A power transformer with two 6.3-volt, 5-ampere heater windings may be used by connecting these windings in series. T$_{502}$ is a 6.3-volt, 1-ampere filament transformer. For mobile work, a 250-volt, 250-milliampere DC power supply is required. Heater voltage is obtained from the 12-volt auto supply.

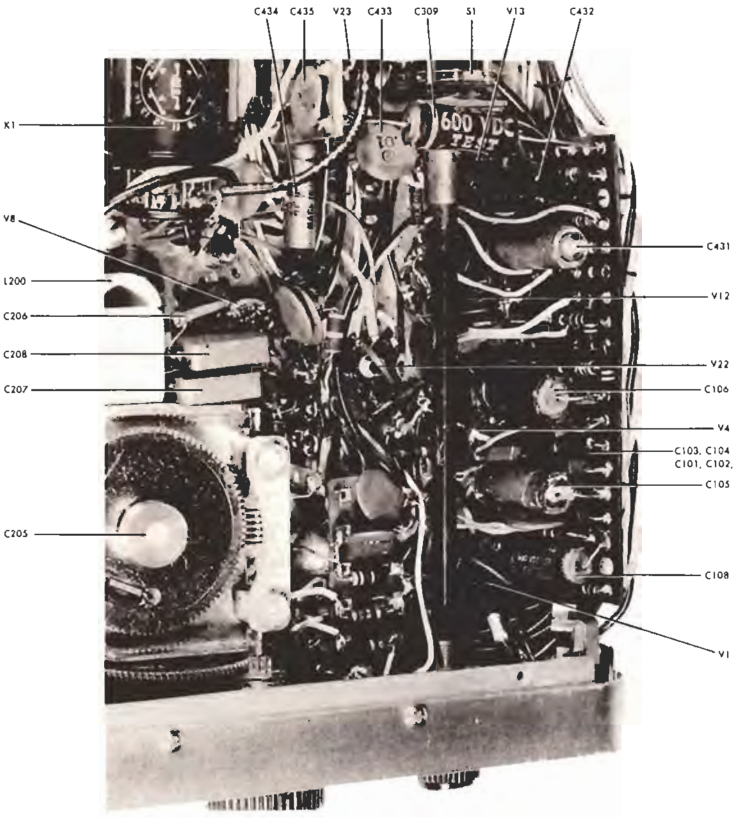

AUDIO/VOX SECTION of the transceiver. Most capacitors and resistors are fastened to the large terminal board at the right. The small terminal board in the center contains components for the AVC and S-meter circuits. The worm gear capacitor drive, and the reduction gear train for the tuning dial, are from a Command Set Transmitter. Capacitance range is about 10 to 60 mmf.

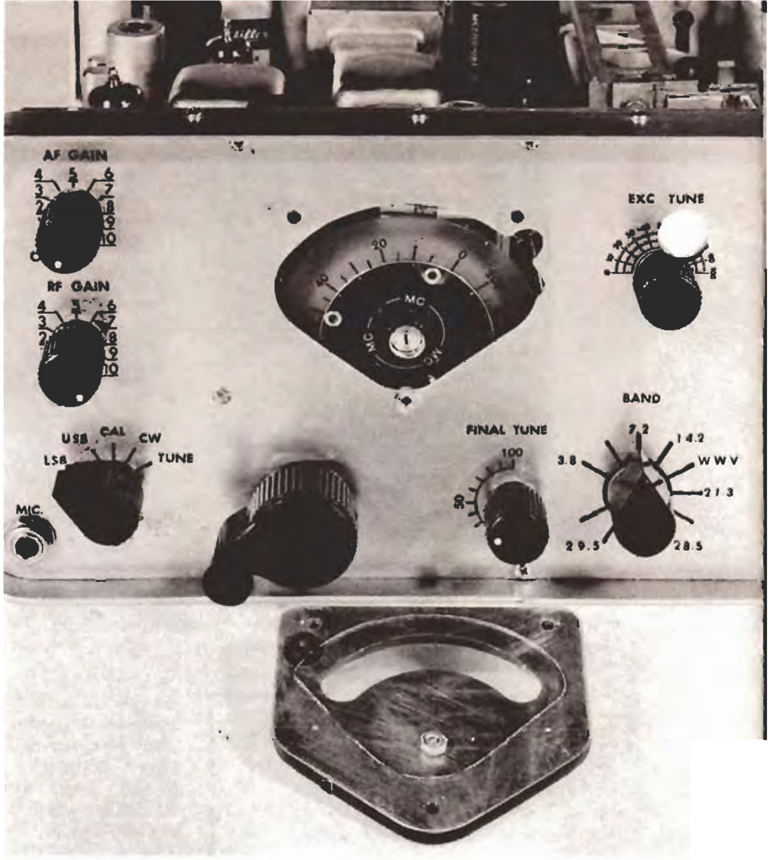

DIAL PLATE and escutcheon details are shown in this view. Dial plate rotates about 350 degrees for 180-degree rotation of tuning capacitor. Black decals are used to mark 0—200 on dial plate, identification of panel controls and their positions. Rubber grommet drives the edge of dial plastic dial cover for adjustment of calibration line at 100-kilocycle calibration points.

THE LWM-3

(Continued from page 5)

to arrive at the proper coil and capacitor settings in the oscillator tuned plate circuits, especially when using the 2nd harmonic of the crystal frequency for 14, 21 and 28 megacycles.

When the receiver wiring is completed a 455-kilocycle signal is connected to pin 1 of V_{17}, a bias battery of -3V is connected from ground to the junction of C_{406} and R_{409}, and the IF transformers T_3 and T_4 roughly tuned to provide maximum output. The signal generator is then connected to the plate of V_{16} and adjusted until some signal can be heard through the IF strip. At this frequency T_3 and T_4 are readjusted to give maximum output.

The signal generator is then connected to pin 7 of V_{15} and set for 3 megacycles. Transformer T_1 is adjusted roughly for maximum output. The input is then changed to both 2.96 and 3.15 megacycles, and T_1 is adjusted to give a uniform response over this frequency band.

Next, select the desired 200-kilocycle tuning ranges from TABLE III — CRYSTAL CHART. Obtain crystals of the specified frequencies and plug them into the proper crystal sockets as indicated in the chart. Connect the signal generator to the antenna input jack (J_1) and tune the VFO dial to 100.

Start with the highest frequency range to be covered — usually 29.5 to 29.7 megacycles — insert the 16.3275-megacycle crystal into the socket for position 11 of the bandswitch (S_2). Set the signal generator to about 29.6 megacycles so that its signal is heard in the LWM-3. Rotate the EXCITER TUNE control to maximum signal strength. Next, adjust the tuning slugs in both L_{208} and L_{209} until a signal peak is heard with the slugs pulled nearly out of the coils by the slug actuator mechanism. This adjustment assures close tracking of these circuits over 28.0 to 29.7-megacycle range (positions 8 to 11).

Next, set the bandswitch to position 6 or 7, and the tuning dial and signal generator to 21.3 megacycles. Adjust trimmer C_{226} and C_{239} for maximum signal after first peaking the signal with the EXCITER TUNE control. Then turn to position 4 and set the VFO and signal generator to 14.2 megacycles. Peak the EXCITER TUNE control and trimmers C_{228} and C_{241}. Repeat this procedure in position 3 at 7.2 megacycles, peaking EXCITER TUNE and C_{230} and C_{242}. Finally, align these circuits in position 1 at 3.8 megacycles, using EXCITER TUNE, and C_{232} and C_{244}.

The received signal is maintained at the same dial calibration point, when switching from lower sideband to upper, by switching the VFO frequency through the use of diode CR5 and capacitor C_{210}, at the same time the BFO frequency is switched. Pick up an AM station near the center of the dial range and tune so that the carrier is no longer heard. Switch S_1 is then changed from LSB to USB and C_{210} is adjusted until either sideband can be heard without hearing the carrier frequency shift. The calibration of the VFO may be readjusted slightly with C_{203} to compensate for the slight change caused by the adjustment of C_{210}.

With the transmitter completed S_1 may be turned to "tune" and, with microphone gain at zero and the vox gain at maximum, the transmitter will be keyed on but with no modulation. The remaining carrier can be detected with a separate receiver which has an S meter. Avoiding overloading the receiver, R_{132} and C_{122} are then adjusted to null out the carrier. If everything is working properly, the separate receiver can be connected to the transmitter output and, with maximum receiver gain, adjust R_{132} and C_{122} until the S meter reading is 3-4 S units. At this point if the separate receiver is tuned through the signal there will be no well-defined signal, just some noise.

With the carrier nulled out the microphone gain is increased slightly to provide some drive. A 50-ohm dummy load should be connected to the output jack (J_2), and the RF voltage envelope from the LWM-3 can be viewed on an oscilloscope, or measured with a VTVM with an RF probe. The EXCITER TUNE control is rotated to give maximum output and L_{103} and T_2 are adjusted for maximum output. The neutralizing control C_{275} should be adjusted in the usual manner on 21.4 or 28.5 megacycles with no drive applied to V_{11}.

For the final adjustment of the pi-network output capacitors, C_{269} to C_{273}, it would be well to connect the coaxial line and linear amplifier to be driven by the LWM-3 transmitter. Different values of capacitance can then be tried on each band to provide maximum drive at the linear amplifier under actual operating conditions.

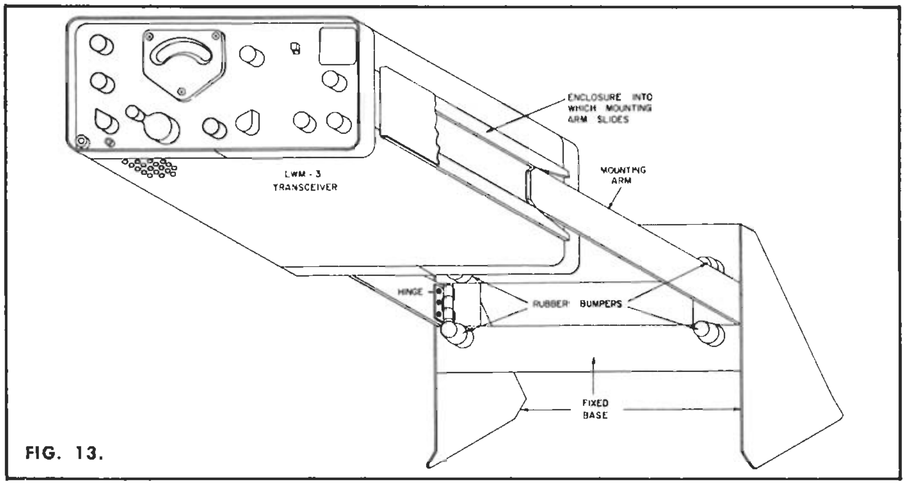

FIG. 13.

MOBILE MOUNTING RACK used by W8WFH for his LWM-3 transceiver. Vertical brackets and cross member are sheet aluminum at least 3/32 of an inch thick. Mounting arms are $\frac{3}{16}$-inch thick aluminum 10¼ inches long and 1¾ inches wide. Standard 2½-inch butt type hinges are used to allow the mounting arms to fold flat when the mount is not in use (see photos on page 1).

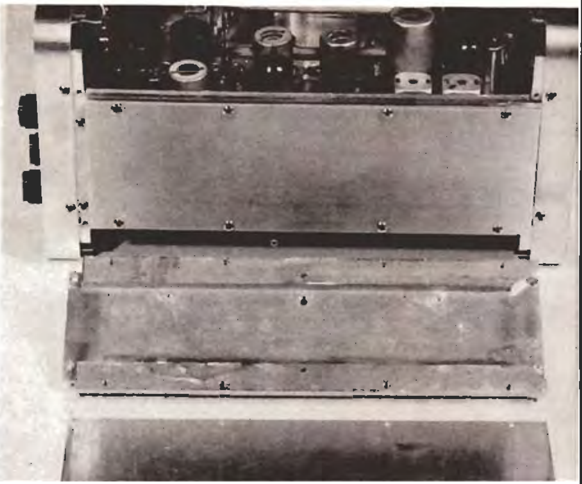

"SIDE POCKETS" on LWM-3 cabinet for mobile rack mounting arms (see Fig. 13 and photos on page 1) are made by sandwiching two spacer strips of ⅝ x $\frac{3}{16}$-inch bar aluminum 9 inches long between $\frac{1}{16}$-inch thick aluminum plates 9 inches long and 3 inches wide. Position spacers and add thin shims so that mounting arms in rack slide freely into pockets without binding. Assemble pieces with 4-40 machine screws.

OPERATION

The band switch is set to the desired 200-kilocycles segment of the band. The EXCITER TUNE control is rotated to provide maximum received signal as indicated by the S Meter. The switch S_1 may be turned to the CAL position to check 100-kilocycle points from the crystal calibrator. Before transmitting turn S_1 to TUNE and the meter switch to OUTPUT. Adjust the FINAL TUNE capacitor for maximum meter indication and you are ready to call in on your favorite frequency. W8WFH has a switch on the dash of the mobile that allows this tuning to be done with the linear amplifier plate voltage off. In this manner no QRM is caused on the frequency before the LWM-3 is ready to operate.

The LWM-3 can also be connected directly to the antenna through a separate transfer switch. At one watt into the antenna W8WFH has been able to maintain a contact from Chicago to New York on 7205 kilocycles. The main advantage of the low power, however, is to talk over very short distances, mobile to mobile, with no receiver overloading difficulties, or unnecessary QRM.

W8WFH devoted over a year and a half to designing, constructing and thoroughly testing his model of the LWM-3 before considering it complete. The experienced constructor should be able to duplicate it in from one to three months, depending upon the amount of "spare time" which can be devoted to this project.

However, the completed LWM-3 transceiver delivers performance comparable to fine commercial equipment costing several times the $100.00 to $250.00 in parts (depending on the extensiveness of your *junk box*) required. Moreover, the LWM-3 is a literal "gold mine" of design, circuit, mechanical and constructional ideas. Nearly *every* amateur will find some feature that he can apply to his own equipment.

The packaged VFO unit, especially, utilizes the excellent tuning capacitor, worm gear knob shaft drive, and split-gear tuning dial drive from the command set transmitter. It can be adapted to practically any VFO circuit design — series and parallel-tuned high-C Colpitts, Hartley, Franklin, Vacker, etc. — and all popular amateur band tuning ranges.

Finally, the LWM-3 offers conclusive proof that the technology of home-constructing amateur radio equipment is keeping pace with commercial equipment, and is not a "dying" art!

THREE NEW G-E HAM NEWS HANDBOOKS NOW AVAILABLE

THIRD BOUND VOLUME COVERING 1956 TO 1960

(Publication No. ETZ-2620)

FEATURES—

- Hard-bound cover with grey leatherette binding in black and orange.
- 260 pages of issues from January-February, 1956 (Vol. 11, No. 1), to November-December, 1960 (Vol. 15, No. 6).
- Includes the 80-page supplement book described at right bound into book.
- Only source of many original issues published from 1956 to 1960.
- Prices: $3.00, postpaid, in U.S.A. and possessions; $3.50 in Canada and other countries, postpaid.

Lighthouse Larry's SIDEBAND HANDBOOK

(Publication No. ETZ-2973)

FEATURES—

- Embossed grey fiberboard covers with white plastic comb style binding.
- 232 pages of articles on single and double sideband, and related subjects from *G-E HAM NEWS*, plus added data:
- Hetrodyning, exciters, linear amplificers, power supplies, receiving adapters, accessories, etc.
- An "anthology" of sideband articles.
- Prices: $2.00, postpaid, in U.S.A. and posessions; $2.50, postpaid, in Canada and other countries.

SUPPLEMENT TO ISSUES JAN. 1956, TO DEC. 1960

(Publication No. ETZ-2911)

FEATURES—

- Embossed grey fiberboard covers with white plastic comb type binding.
- 80 pages of added circuit, construction and tune-up data for original articles published in 1956 to 1960.
- Complete Cross Index of all articles from May-June, 1946 (Vol. 1, No. 1), to November-December, 1960 issues.
- Prices: $1.00, postpaid, in U.S.A. and possessions; $1.50, postpaid, in Canada and other countries.

ORDERING INSTRUCTIONS FOR THESE PUBLICATIONS —

Send your order, and include proper remittance, made payable to "General Electric Company," to the address on page 2 which serves your country. All three books are approximately 6½ x 9¼ inches in over-all size.

MORE G-E COMPACTRON DEVICES ANNOUNCED

SIXTEEN TYPES of General Electric's COMPACTRON multi-function devices are now being supplied to manufacturers of electronic equipment. They are appearing in new television and home radio receivers, Hi-Fi amplifiers, and even in amateur radio gear. The new Hammarlund HX-50 SSB exciter has 6C10 and 6D10 triodes in it.

A typical short wave receiver requires about one-third fewer of the versatile Compactron devices than conventional receiving tubes. In addition, they cost less per function.

Basic specifications of the sixteen types are given below. Note that up to four circuit functions can be performed by Compactron devices having combinations of diodes, triodes and pentodes. *G-E HAM NEWS* will publish additional data — and circuits too — as more Compactron devices become available.

12-PIN SOCKETS for G-E Compactron devices are now available — two in a plastic bag, at nominal cost — from G-E Tube distributors. They fit a $1\frac{1}{8}$-inch chassis hole, with mounting holes spaced $1\frac{5}{16}$ inches. Ask for ETR-2976 at your G-E distributor.

CONDENSED SPECIFICATIONS OF CURRENT G-E COMPACTRON™ DEVICES

TYPE	DESCRIPTION	CHARACTERISTICS SIMILAR TO	BASE	HEATER		DIMENSIONS IN INCHES DIA. "A"	HEIGHT "B"
1AD2	HV Diode	1J3 High-Voltage Rectifier	12DQ	1.25V	0.2A	1.19	3
2AH2*	HV Diode	3A3 High-Voltage Rectifier	12DG	2.5V	0.3A	1.19	3
6AG11	Duplex-Diode Twin Triode	6AL5 Diodes plus 12AT7 Triodes	12DA	6.3V	0.75A	1.19	1.5
6AS11	Dissimilar-Double-Triode Pentode	6AU8 Triode Section plus 6CX8 Triode-Pentode	12DP	6.3V	1.05A	1.19	2.25
6AV11	Triple Triode	Three 12AU7 Triode Sections	12BY	6.3V	0.6A	1.19	1.5
6AX3*	TV Damping Diode	6AX4-GTB TV Damping Diode	12BL	6.3V	1.2A	1.19	2.25
6B10*	Duplex-Diode Twin Triode	12AU7 Twin Triode plus 2 Diodes	12BF	6.3V	0.6A	1.19	1.5
6C10*	Triple Triode	Three 12AX7 Triode Sections	12BQ	6.3V	0.6A	1.19	1.5
6D10*	Triple Triode	Three 12AT7 Triode Sections	12BY	6.3V	0.45A	1.19	1.5
6FJ7	Dissimilar Double Triode	6DN7 Double Triode	12BM	6.3V	0.9A	1.19	2
6G11	Dissimilar Double Pentode	6DT6 Pentode Plus 6CU5 Audio Pentode	12BU	6.3V	1.2A	1.19	2
6GE5	Beam Power Pentode	6DQ6-B TV Horizontal Sweep Amplifier	12BJ	6.3V	1.2A	1.56	2.5
6GF5	Beam Power Pentode	6BQ6-GTB TV Horizontal Sweep Amplifier	12BJ	6.3V	1.2A	1:19	2.5
6J11	Twin Pentode	Two 6EW6 High-Gm Pentodes	12BW	6.3V	0.8A	1.19	1.5
6K11*	Three-Section Triode	12AT7 Twin Triode plus One 12AU7 Section	12BY	6.3V	0.6A	1.19	1.5
6M11	Twin-Triode Pentode	12AT7 Twin Triode plus 6EW6 Pentode	12CA	6.3V	0.775	1.19	1.5

*Types available from G-E Tube distributors immediately; other types are in production and will be available shortly.

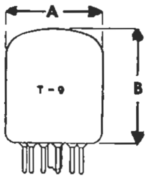

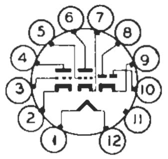
12BF

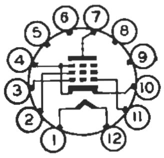
12BJ

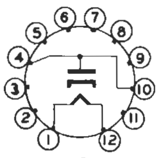
12BL

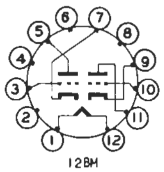
12BM

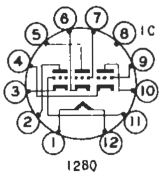

12BQ

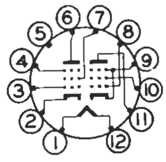
12BU

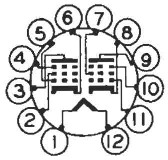
12BW

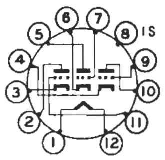

12BY

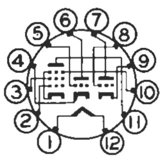
12CA

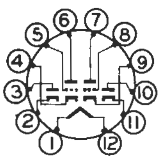
12DA

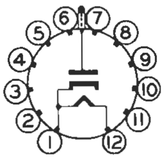
12DG

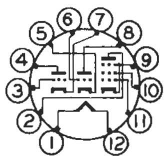
12DP

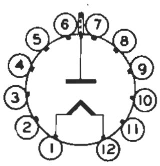
12DQ

HAM NEWS
TUBES

JANUARY-FEBRUARY
1962
VOL. 17, No. 1

Available **FREE** from your G-E Tube Distributor

HAM NEWS
TUBES

MARCH-APRIL. 1962 20 CENTS

6th Edition of SPECIAL

DX LOG ISSUE

CHECK LIST OF STATES, ZONES, COUNTRIES AND CONTINENTS

Compiled By S. E. Johnson, Jr., W2FBS

IN THIS ISSUE . . .

PRINCIPAL AMATEUR RADIO DX OPERATING AWARDS:

This **G-E HAM NEWS** Special DX LOG Issue contains handy tables on which radio amateurs can tabulate their standings for the internationally recognized operating awards. Tables for two other popular awards — Worked All Prefixes (WPX), and U. S. A. Counties Award (USA-CA) — are not included because of their complexity.

However, tables covering these awards, plus more than 650 other awards, is covered in a Directory of Certificates and Awards, which is updated quarterly. This directory is published by Clif Evans, K6BX, Box 385, Bonita, California. Further details may be obtained from him; or, the DX and USA-CA Program columns in CQ magazine.

Complete rules for WAC, DXCC and WAS are available from ARRL. Send stamped and addressed envelope, or International Reply Coupons, to the issuers of these awards for complete rules.

WORKED ALL CONTINENTS (WAC) —

The WAC award is issued by the International Amateur Radio Union upon proof of two-way contact with each of the six continents. Amateurs in the U. S. A., its possessions and Canada should apply through **ARRL**; those elsewhere must submit direct to their own IARU member-society.

Two basic types of WAC certificates are issued. One contains no endorsements and is awarded for a combination of c.w. and phone contacts. The other is awarded when all contacts are made two ways on radiotelephone.

WORKED ALL STATES AWARD (WAS) —

The WAS award is granted upon submission of confirmation to **ARRL** that two-way communication has been established with each of the fifty United States on any or all amateur bands. The District of Columbia may be counted for Maryland.

Contacts may be made over any period of years, except only contacts with Alaska dated January 3, 1959 or later count, and only contacts with Hawaii dated August 21, 1959 or later count. Address applications for the WAC, DXCC and WAS awards to the Communications Department, **ARRL**, 38 La Salle Road, West Hartford 7, Conn.

TABULATING AWARD RECORDS —

There are many different ways in which radio amateurs keep records of their two-way contacts for the DXCC, WAC, WAS and WAZ awards. To permit flexibility in tabulating this information, space is provided in the right-hand portion of each table for each user to rule in and identify columns to suit his needs.

Examples of suggested headings for columns are shown at the right. In the two lower headings, only the call letters of the stations contacted are inserted in the columns designating the band on which they are contacted, or type of emission employed. Use whateven system you wish.

— Good hunting for DX!

—Lighthouse Larry

DX CENTURY CLUB AWARD (DXCC) —

The DXCC Award is issued to radio amateurs who have confirmed contact with 100 ARRL countries in the postwar period. Confirmations must be submitted direct to **ARRL** for at least 100 claimed countries with the first application. Endorsements are granted for each ten additional confirmations submitted for credit.

Two categories of DXCC certificates are issued. One is awarded for c.w., or a combination of c.w. and phone contacts. The "Radiotelephone" DXCC award is granted when proof is submitted that all two-way contacts were made on radiotelephone.

WORKED ALL ZONES AWARD (WAZ) —

The **WAZ** award is sponsored by **CQ — Radio Amateurs' Journal.** The rules require confirmed two-way contact dated after November 15, 1945, with each of the 40 zones, as shown on the WAZ Map and rules supplied by CQ. List and QSL's must show the geographical location of the stations contacted.

WAZ is issued for a combination of c.w. and phone contacts. Phone WAZ requires proof of two-way phone contacts with all zones. Apply for WAZ award to Mr. Urban Le Jeune, Jr. W2DEC, DX Editor, CQ, Box 35, Hazlet, New Jersey, U. S. A.

DETAILS OF COMMUNICATION			QSL	
CALL LETTERS	DATE OF QSO	BAND, MC.	SENT	REC'D

CALL LETTERS OF STATION CONTACTED BAND, MC.				
3.5	7	14	21	28

CALL LETTERS OF STATION CONTACTED		
A1-CW	6A3-AM	3A3-SSB

OFFICIAL COUNTRIES LISTING

Prefix	Official Country	Continent	WAZ Zone	
AC3	Sikkim	Asia	22	
AC4	Tibet	Asia	23	
AC5	Bhutan	Asia	22	
AP2	East Pakistan	Asia	22	
AP[3]	West Pakistan	Asia	21	
BV (C3)	Formosa (Taiwan)	Asia	24	
BY, (C[1])	China	Asia	23, 24	
C9	Manchuria	Asia	24	
CE	Chile	S. America	12	
CE9, KC4, LU-Z, VK0 VP8, ZL5, etc.	Antarctica	Africa, Oceania & S. America		
CE0A	Easter Island	S. America	12	
CE0Z[3]	Juan Fernandez Archipelago	S. America	12	
CM, CO	Cuba	N. America	8	
CN2, 8, 9	Morocco	Africa	33	
CP	Bolivia	S. America	10	
CR4	Cape Verde Islands	Africa	35	
CR5	Portuguese Guinea	Africa	35	
CR5	Principe, Sao Thome	Africa	36	
CR6	Angola	Africa	36	
CR7	Mozambique	Africa	37	
CR9	Macao	Asia	24	
CR10	Portuguese Timor	Oceania	28	
CT1	Portugal	Europe	14	
CT2	Azores Islands	Europe	14	
CT3	Madeira Islands	Africa	33	
CX	Uruguay	S. America	13	
DJ, DL, DM	Germany (incl. Saar[2])	Europe	14	
DU	Philippine Islands	Oceania	27	
EA	Spain	Europe	14	
EA6	Balearic Islands	Europe	14	
EA8	Canary Islands	Africa	33	
EA9	Ifni	Africa	33	
EA9	Rio de Oro	Africa	33	

OFFICIAL COUNTRIES LISTING

Prefix	Official Country	Continent	WAZ Zone	
EA9	Spanish Morocco	Africa	33	
EA0	Spanish Guinea	Africa	36	
EI	Republic of Ireland	Europe	14	
EL	Liberia	Africa	35	
EP, EQ[4]	Iran	Asia	21	
ET2	Eritrea	Africa	37	
ET3	Ethiopia	Africa	37	
F	France	Europe	14	
FA	Algeria	Africa	33	
FB8	Amsterdam & St. Paul Islands	Africa	39	
FB8	Comoro Islands	Africa	39	
FB8	Kerguelen Islands	Africa	39	
FB8	Tromelin Island	Africa	39	
FC[1]	Corsica	Europe	15	
FG7	Guadeloupe	N. America	8	
FK8	New Caledonia	Oceania	32	
FL8	French Somaliland	Africa	37	
FM7	Martinique	N. America	8	
FO8	Clipperton Island	N. America	7	
FO8	French Oceania (e.g. Tahiti)	Oceania	32	
FP8	St. Pierre & Miquelon Islands	N. America	5	
FR7	Reunion Island	Africa	39	
FS7	Saint Martin	N. America	8	
FU8, YJ1	New Hebrides	Oceania	32	
FW8	Wallis & Futuna Islands	Oceania	32	
FY7	French Guiana & Inini	S. America	9	
G	England	Europe	14	
GC	Channel Islands	Europe	14	
GD	Isle of Man	Europe	14	
GI	Northern Ireland	Europe	14	
GM	Scotland	Europe	14	
GW	Wales	Europe	14	
HA	Hungary	Europe	15	
HB	Switzerland	Europe	14	
HC	Equador	S. America	10	

OFFICIAL COUNTRIES LISTING

Prefix	Official Country	Continent	WAZ Zone	
HC8	Galapagos Islands	S. America	10	
HE	Liechtenstein	Europe	14	
HH	Haiti	N. America	8	
HI	Dominican Republic	N. America	8	
HK	Colombia	S. America	9	
HK0[3]	Bajo Nueva	N. America	9	
HK0[3]	Malpelo Is.	S. America	9	
HK0	San Andres & Providencia	N. America	7	
HL, HM[4]	Korea	Asia	25	
HP	Panama	N. America	7	
HR	Honduras	N. America	7	
HV	Vatican City	Europe	15	
HZ	Saudi Arabia (Hedjaz & Nejd)	Asia	21	
I1, IT1	Italy (incl. Trieste[5])	Europe	15	
IS1	Sardinia	Europe	15	
JA[4], KA	Japan	Asia	25	
JT1	Mongolia	Asia	23	
JY	Jordan	Asia	20	
JZ0	Netherlands New Guinea	Oceania	28	
K, W	United States of America	N. America	3, 4, 5	
KA	(See JA)			
KB6	Baker, Canton, Howland & American Phoenix Island	Oceania	31	
KC4	(See CE9)			
KC4	Navassa Island	N. America	8	
KC6	Eastern Caroline Islands	Oceania	27	
KC6	Western Caroline Islands	Oceania	27	
KG1	(See OX)			
KG4	Guantanamo Bay	N. America	8	
KG6[3]	Marcus Island	Oceania	27	
KG6	Mariana Island	Oceania	27	
KG6I-	Bonin & Volcano Is.	Asia	27	
KH6	Hawaiian Islands	Oceania	31	
KH6[3]	Kure Island	Oceania	31	
KJ6	Johnston Island	Oceania	31	
KL7	Alaska	N. America	1	
KM6	Midway Islands	Oceania	31	

OFFICIAL COUNTRIES LISTING

Prefix	Official Country	Continent	WAZ Zone	
KP4	Puerto Rico	N. America	8	
KP6	Palmyra Group, Jarvis Island	Oceania	31	
KR6	Ryukyu Islands (e.g. Okinawa)	Asia	25	
KS4B[3]	Serrana Bank & Roncador Cay	N. America	7	
KS4	Swan Island	N. America	7	
KS6	American Samoa	Oceania	32	
KV4	Virgin Islands	N. America	8	
KW6	Wake Island	Oceania	31	
KX6	Marshall Islands	Oceania	31	
KZ5	Canal Zone	N. America	7	
LA	Jan Mayen	Europe	40	
LA	Norway	Europe	14	
LA	Svalbard (Spitzenberg)	Europe	40	
LU	Argentina	S. America	13	
LU-Z	(See CE9)			
LX	Luxembourg	Europe	14	
LZ	Bulgaria	Europe	20	
M1	San Marino	Europe	15	
MP4	Bahrein Island	Asia	21	
MP4	Qatar	Asia	21	
MP4	Trucial Oman	Asia	21	
OA	Peru	S. America	10	
OD5[4]	Lebanon	Asia	20	
OE[4]	Austria	Europe	15	
OH	Finland	Europe	15	
OH0	Aland Island	Europe	15	
OK	Czechloslovakia	Europe	15	
ON4, 5	Belgium	Europe	14	
OX, KG1	Greenland	N. America	40	
OY	Faeroes	Europe	14	
OZ	Denmark	Europe	14	
PA0, PI1	Netherlands	Europe	14	
PJ[4]	Netherlands West Indies	S. America	9	
PJ2M-	Sint Maarten	N. America	8	
PX	Andorra	Europe	14	

OFFICIAL COUNTRIES LISTING

Prefix	Official Country	Continent	WAZ Zone	
PY	Brazil	S. America	11	
PY0	Fernando de Noronha	S. America	7	
PY0	Trindade	S. America	7	
PZ1	Netherlands Guiana	S. America	9	
SL, SM	Sweden	Europe	14	
SP	Poland	Europe	15	
ST2	Sudan	Africa	34	
SU	Egypt	Africa	34	
SV	Crete	Europe	20	
SV	Dodecanese (e.g. Rhodes)	Europe	20	
SV	Greece	Europe	20	
TA	Turkey	Asia & Europe	20	
TF	Iceland	Europe	40	
TG	Guatemala	N. America	7	
TI	Costa Rica	N. America	7	
TI9	Cocos Island	N. America	7	
TJ (FE8)	Cameroons	Africa	36	
TL8[17]	Central African Republic	Africa	36	
TN8[18]	Congo Republic	Africa	36	
TR8[19]	Gabon Republic	Africa	35	
TT8[20]	Chad Republic	Africa	35	
TU2[21]	Ivory Coast	Africa	35	
TY[22]	Dahomey Republic	Africa	35	
TZ[23]	Mali Republic	Africa	35	
UA1, 2, 3, 4, 6, UN1[24]	European Russian Socialist Federated Soviet Republic	Europe	16	
UA1	Franz Josef Land	Europe	40	
UA2[3]	Kaliningrad	Europe	16	
UA9, 0	Asiatic Russian S.F.S.R.	Asia	17, 18, 19	
UB5	Ukraine	Europe	16	
UC2	White Russian S.F.S.R.	Europe	16	
UD6	Azerbaijan	Asia	21	
UF6	Georgia	Asia	21	
UG6	Armenia	Asia	21	
UH8	Turkoman	Asia	17	
UI8	Uzbek	Asia	17	
UJ8	Tadzhik	Asia	17	

OFFICIAL COUNTRIES LISTING

Prefix	Official Country	Continent	WAZ Zone	
UL7	Kazakh	Asia	17	
UM8	Kirghiz	Asia	17	
UO5	Moldavia	Europe	16	
UP2	Lithuania	Europe	15	
UQ2	Latvia	Europe	15	
UR2	Estonia	Europe	15	
VE, VO[6]	Canada	N. America	1 to 5	
VK	Australia (incl. Tasmainia)	Oceania	29, 30	
VK	Lord Howe Island	Oceania	30	
VK4[3]	Willis Islands	Oceania	29	
VK9, ZC3	Christmas Island	Oceania	29	
VK9	Cocos Island	Oceania	29	
VK9	Nauru Island	Oceania	31	
VK9	Norfolk Island	Oceania	32	
VK9	Papua Territory	Oceania	28	
VK9	Territory of New Guinea	Oceania	28	
VK0	(See VE)			
VK0	Heard Island	Oceania	39	
VK0	Macquarie Island	Oceania	30	
VO[6]	(See CE9)			
VP1	British Honduras	N. America	7	
VP2[7]	Anguilla	N. America	8	
VP2[7]	Antigua, Barbuda	N. America	8	
VP2[7]	British Virgin Is.	N. America	8	
VP2[8]	Dominica	N. America	8	
VP2[8]	Grenada & Dependencies	N. America	8	
VP2[7]	Montserrat	N. America	8	
VP2[7]	St. Kitts, Nevis	N. America	8	
VP2[8]	St. Lucia	N. America	8	
VP2[8]	St. Vincent & Dependencies	N. America	8	
VP3	British Guiana	S. America	9	
VP4	Trinidad & Tobago	S. America	9	
VP5	Cayman Is.	N. America	8	
VP5	Jamaica	N. America	8	
VP5	Turks & Caicos Islands	N. America	8	
VP6	Barbados	N. America	8	

OFFICIAL COUNTRIES LISTING

Prefix	Official Country	Continent	WAZ Zone	
VP7	Bahama Islands	N. America	8	
VP8	(See CE9)			
VP8	Falkland Islands	S. America	13	
VP8, LU-Z	South Georgia	S. America	13	
VP8, LU-Z	South Orkney Islands	S. America	13	
VP8, LU-Z	South Sandwich Islands	S. America	13	
VP8, LU-Z, CE9	South Shetland Islands	S. America	13	
VP9	Bermuda Islands	N. America	5	
VQ1	Zanzibar	Africa	37	
VQ2	Northern Rhodesia	Africa	36	
VQ4	Kenya	Africa	37	
VQ5	Uganda	Africa	37	
VQ8[3]	Cargados Carajos	Africa	37	
VQ8	Chagos Islands	Africa	39	
VQ8	Mauritius	Africa	39	
VQ8	Rodriguez Island	Africa	39	
VQ9	Seychelles	Africa	39	
VR1	British Phoenix Islands	Oceania	31	
VR1	Gilbert & Ellice & Ocean Islands	Oceania	31	
VR2	Fiji Islands	Oceania	32	
VR3	Fanning & Christmas Is.	Oceania	31	
VR4	Solomon Islands	Oceania	28	
VR5	Tonga (Friendly) Islands	Oceania	32	
VR6	Pitcairn Island	Oceania	32	
VS1[10]	Singapore	Asia	28	
VS4	Sarawak	Oceania	28	
VS5	Brunei	Oceania	28	
VS6	Hong Kong	Asia	24	
VS9A	Aden & Socotra	Asia	21, 37	
VS9K[3]	Kamarin Is.	Asia	21	
VS9M	Maldive Islands	Asia	22	
VS9O	Sultanate of Oman	Asia	21	
VU2	India	Asia	22	
VU4	Laccadive Islands	Asia	22	
VU5	Andaman & Nicobar Islands	Asia	26	

OFFICIAL COUNTRIES LISTING

Prefix	Official Country	Continent	WAZ Zone	
W	(See K)			
XE, XF	Mexico	N. America	6	
XE4	Revilla Gigedo	N. America	6	
XT2[25]	Voltaic Republic	Africa	35	
XW8[4, 11]	Laos	Asia	26	
XZ2	Burma	Asia	26	
YA	Afghanistan	Asia	21	
YI	Iraq	Asia	21	
YJ1	(See FU8)			
YK	Syria	Asia	20	
YN	Nicaragua	N. America	7	
YO	Roumania	Europe	20	
YS	Salvador	N. America	7	
YU	Yugoslavia	Europe	15	
YV	Venezuela	S. America	9	
YV0	Aves Island	S. America	9	
ZA	Albania	Europe	15	
ZB1	Malta	Europe	15	
ZB2	Gibraltar	Europe	14	
ZC4	Cyprus	Asia	20	
ZC5	British North Borneo	Oceania	28	
ZC6	Palestine	Asia	20	
ZD1	Sierra Leone	Africa	35	
ZD3	Gambia	Africa	35	
ZD6	Nyasaland	Africa	37	
ZD7	Saint Helena	Africa	36	
ZD8	Ascension Island	Africa	36	
ZD9	Tristan da Cunha & Gough Islands	Africa	38	
ZE	Southern Rhodesia	Africa	38	
ZK1	Cook Islands	Oceania	32	
ZK1[3]	Manihiki (Northern Cook) Islands	Oceania	32	
ZK2	Niue	Oceania	32	
ZL[3]	Auckland & Campbell Is.	Oceania	22	
ZL	Chatham Islands	Oceania	32	
ZL	Kermadec Islands	Oceania	32	

OFFICIAL COUNTRIES LISTING

Prefix	Official Country	Continent	WAZ Zone	
ZL	New Zeland	Oceania	32	
ZL5	(See CE9)			
ZM6	British Samoa	Oceania	32	
ZM7	Tokelau (Union) Islands	Oceania	31	
ZP	Paraguay	S. America	11	
ZS1, 2, 4, 5, 6	Union of South Africa	Africa	38	
ZS2	Prince Edward & Marion Islands	Africa	39	
ZS3	Southwest Africa	Africa	38	
ZS7	Swaziland	Africa	38	
ZS8	Basutoland	Africa	38	
ZS9	Bechuanaland	Africa	38	
3A	Monaco	Europe	14	
3V8	Tunisia	Africa	33	
4S7	Ceylon	Asia	22	
4W1	Yemen	Asia	21	
4X4[12]	Israel	Asia	20	
5A	Libya	Africa	34	
5H3 (VQ3)	Tanganyika Territory	Africa	37	
5N2 (ZD2)	Nigeria	Africa	35	
5R4 (FB8)	Malagasy Rep. (Madagascar)	Africa	39	
5T[27]	Mauritania	Africa	35	
5U7[28]	Niger Republic	Africa	35	
5V (FD)	Togo	Africa	35	
6O1, 2[28]	Somali Republic	Africa	37	
6W8[30]	Senegal Republic	Africa	35	
7G1[31]	Republic of Guinea	Africa	36	
9G1[13]	Ghana	Africa	35	
9K2	Kuwait	Asia	21	
9K3[3]	Kuwait/Saudi Arabia Neutral Zone	Asia	21	
9M2 (VS2)	Malaya	Asia	28	
9N1	Nepal	Asia	22	
9Q5(OQ5)	Republic of the Congo	Africa	36	
9U5[32]	Ruanda-Urundi	Africa	36	
	Aldabra Islands[14]	Africa	39	

CROSS INDEX TO OFFICIAL COUNTRIES LISTING

Aden, VS9
Afghanistan, YA
Aland Islands, OH0
Alaska, KL7
Albania, ZA
Aldabra Islands [14]
Algeria, FA
Amsterdam, FB8
Andaman Islands, VU5
Andorra, PX
Angola, CR6
Anguilla, VP2
Antartica, CE9, KC4, LU-Z, VK0, VP8,ZL5, etc.
Antigua, VP2
Arabia, Saudi, HZ
Argentina, LU
Armenia, UG6
Ascension Island, ZD8
Asiatic R.S.F.R., UA9, 0
Aukland Is.,ZL
Australia, VK
Austria, OE
Aves Island, YV0
Azerbaijan, UD6
Azores Islands, CT2

Bahama Islands, VP7
Bahrein Island, MP4
Bajo Nueva, HK0
Baker Island, KB6
Balearic Islands, EA6
Barbuda, VP2
Barbados, VP6
Basutoland, ZS8
Bechuanaland, ZD9
Belgium, ON4, 5
Bermuda Islands, VP9
Bhutan, AC5
Bolivia, CP
Bonin Is., KG6I
Borneo, British North, ZC5
Brazil, PY
Brunei, VS5
Bulgaria, LZ
Burma, XZ2

Caicos Islands, VP5
Campbell Is., ZL
Cameroons, TJ
Canada, VE, VO
Canal Zone, KZ5
Canary Islands, EA8
Cargodos Carajos, VQ8
Caroline Is., Eastern, KC6
Caroline Is., Western, KC6
Cayman Islands, VP5
Central African Rep., TL8
Ceylon, 4S7
Chad Rep., TT8
Chagos Islands, VQ8
Channel Islands, GC
Chatham Islands, ZL
Chile, CE
China, C
Christmas Island, VK9
Christmas & Fanning Is., VR3
Clipperton Island, FO8
Cocos Island, T19
Cocos Islands, VK9
Colombia, HK
Comoro Islond, FB8
Congo Rep., TN8
Caok Islands, ZK1

Corsica, FC
Costa Rica, TI
Crete, SV
Cuba, CM, CO
Cyprus, ZC4
Czechoslovakia, OK

Dahomey Rep., TY
Denmark, OZ
Dodecanese, SV
Dominica, VP2
Dominican Republic, HI

East Pakistan, AP
Easter Is., CE0
Egypt, SU
Ellice Islands, VR1
England, G
Equador, HC
Eritrea, ET2
Estonia, UR2
Ethiopia, ET3
European R.S.F.S.R., UA1, 3, 4, 6
Faeroes, OY
Falkland Islands, VP8
Fernando de Noronha, PY0
Fiji Islands, VR2
Finland, OH
Formosa, BV, C3
France, F
Franz Josefh Land, UA1
French Oceania, FO8
Friendly Islands, VR5
Futuna Island, FW8

Galapagos Islands, HC8
Gabon Rep., TR8
Gambia, ZD3
Georgia, UF6
Germany, DJ, DL, DM
Ghana, 9G1
Gibraltar, ZB2
Gilbert Islands, VR1
Gough Island, ZD9
Greece, SV
Greenland, OX, KG1
Grenada & Dependencies, VP2
Guadeloupe, FG7
Guantanamo Bay, KG4
Guatemala, TG
Guiana, British, VP3
Guiana, French, FY7
Guiana, Netherlands, PZ1
Guinea, Portugese, CR5
Guinea, Spanish, EA0

Haiti, HH
Hawaiian Islands, KH6
Heard Island, VK0
Hedjaz, HZ
Honduras, HR
Honduras, British, VP1
Hong Kong, VS6
Howland Island, KB6
Hungary, HA

Iceland, TF
Ifni, EA9
India, VU2
Inini, FY7
Iran, EP, EQ
Iraq, YI
Ireland, Northern, GI
Ireland, Rep. of, EI

Isle of Man, GD
Israel, 4X4
Italy, I1, IT1
Ivory Coast, TU2

Jamaica, VP5
Jan Mayen, LA
Japan, JA, KA
Jarvis, Is., KP6
Johnston Island, KJ6
Jordan, JY
Juan Fernandez Arch, CE0

Kaliningrad, UA2
Kamaran Is., VS9
Kazakh, UL7
Kenya, VQ4
Kerguelen Islands, FB8
Kermadec Island, ZL
Kirghiz, UM8
Korea, HL
Kure Is., KH6
Kuwait/Saudi Arabia Neutral Zone, 9K3
Kuwait, 9K2

Laccadive Islands, VU4
Laos, XW8
Latvia, UQ2
Lebanon, OD5
Liberia, EL
Libya, 5A
Liechtenstein, HE
Lithuania, UP2
Lord Howe Island, VK
Luxembourg, LX

Macao, CR9
Macquarie Island, VK0
Madeira Islands, CT3
Malagasy Rep., 5R4
Malaya, 9M2
Maldive Islands, VS9
Mali Rep., TZ
Malpelo Is., HK0
Malta, ZB1
Manchuria, C9
Manihiki Is., ZKI
Marcus Is., KG6
Mariana Islands, KG6
Maricon Island, ZS2
Marshall Islands, KX6
Martinique, FM7
Mauritania, 5T
Mauritius, VQ8
Mexico, XE, XF
Midway Islands, KM6
Miquelon Island, FP8
Moldavia, UO5
Monaco, 3A
Mongolia, JT1
Montserrat, VP2
Morocco, French, CN8
Morocco, Spanish, EA9
Mozambique, CR7

Nauru, VK9
Navassa Island, KC4
Nejd, HZ
Nepal, 9N1
Netherlands, PA0, PI1
Netherlands West Indies, PJ
Nevis, VP2
New Caledonia, FK8
New Guinea, Netherlands, JZ0
New Guinea Terr., VK9

New Hebrides, FU8, YJ1
New Zealand, ZL
Nicaragua, YN
Nicobar Islands, VU5
Niger Rep., 5U7
Nigeria, 5N2
Niue, ZK2
Norfolk Island, VK9
Norway, LA
Nyasaland, ZD6

Ocean Islands, VR1
Okinawa, KR6
Oman, Sultanate of, VS9
Oman, Trucial, MP4

Palestine, ZC6
Palmyra Group, KP6
Panama, HP
Papua Territory, VK9
Paraguay, ZP
Peru, OA
Philippine Islands, DU
Phaenix Island, American, KB6
Phoenix Islands, British, VR1
Pitcairn Island, VR6
Poland, SP
Portugal, CT1
Portugese India, CR8
Prince Edward Island, ZS2
Principe Islands, CR5
Puerto Rico, KP4

Qatar, MP4

Rep. of Guinea, 7G1
Rep. of the Congo, 9Q5
Reunion Island, FR7
Revilla Gigedo, XE4
Rhodes, SV
Rhodesia, Northern, VQ2
Rhodesia, Southern, ZE
Rio de Oro, EA9
Rodriguez Island, VQ8
Roumania, YO
Ruanda-Urundi, 9U5
Russian S.F.S.R. (Asiastic), UA9, UA0
Russian S.F.S.R. (European), UA1, 2, 3, 4, 6
Ryukyu Is., KR6

St. Helena, ZD7
St. Kitts, VP2
St. Lucia, VP2
St. Martin, FS7
St. Paul Islands, FB8
St. Pierre Island, FP8
St. Vincent & Dependencies, VP2
Salvador, YS
Samoa, American, KS6
Samoa, British, ZM6
San Andres & Providencia, HK0
San Marino, M1
Sao Thome, CR5
Sarawak, VS4
Sardinia, IS1
Saudi Arabia, HZ
Scotlond, GM
Senegal Rep., 6W8
Serrana Bank and Roncador Cay, KS4
Seychelles, VQ7

Sierra Leone, ZD1
Sikkim, AC3
Singapore, VS1
Sint Maarten, PJ2M-
Socotra, VS9
Solomon Islands, VR4
Somali Rep., 6O
Somaliland, French, FL8
South Africa, Unian of, ZS1, 2, 4, 5, 6
South Georgia Is., VP8, LU-Z
South Orkney Is., VP8, LU-Z
South Sandwich Is., VP8, LU-Z
South Shetland Is., VP8, LU-Z
Southwest Africa, ZS3
Spain, EA
Spitzbergen, LA
Sudan, ST
Svalbard, LA
Swan Island, KS4
Swaziland, ZS7
Sweden, SL, SM
Switzerland, HB
Syria, YK

Tadzhik, UJ8
Tahiti, FO8
Tanganyika Terr., 5H3
Tasmania, VK7
Tibet, AC4
Timor, Portugese, CR10
Tobago, VP4
Togo, 5V
Tokelau Islands, ZM7
Tonga Islands, VR5
Trieste, J1
Trindade, PY0
Trinidad, VP4
Trisran da Cunha, ZD9
Tromelin Island, FB8
Trucial Oman, MP4
Tunisia, 3V8
Turkey, TA
Turkoman, UH8
Turks Islands, VP5

Uganda, VQ5
Ukraine, UB5
Union Islands, ZM7
Union of South Africa, ZS1, 2, 4, 5, 6
United States, K, W
Uruguay, CX
Uzbek, UI8

Vatican City, HV
Venezuela, YV
Virgin Islands, KV4
Virgin Islands, British, VP2
Volcano Islands, KG61
Voltaic Rep., XT2

Wake Island, KW6
Wales, GW
Wallis Islands, FW8
West Pakistan, AP
White Russian, S.F.S.R., UC2
Willis Islands, VK4

Yemen, 4W1
Yugoslavia, YU
Zanzibar, VQ1

FOOTNOTES

(1) This prefix is listed as "unofficial" in ARRL Countries List, but it is recognized for DXCC credit.

(2) Confirmations from Saar, dated after November 8, 1947, and prior to April 1, 1957, count as separate country for DXCC credit; list under DELETED COUNTRIES. Subsequent confirmations count as credit for Germany.

(3) New listing as separate country (since last G-E HAM NEWS DX LOG was published) for confirmations dated on or after November 15, 1945.

(4) Communications between radio amateurs in these countries, and United States amateurs, were banned for certain periods; see BANNED COUNTRIES listing for details.

(5) Confirmations from Trieste, dated prior to April 1, 1957, count as separate country for DXCC credit; list under DELETED COUNTRIES. Subsequent confirmations count as DXCC credit for Italy.

(6) Confirmations from Newfoundland and Labrador, dated prior to April 1, 1949, count as separate country for DXCC credit; list under DELETED COUNTRIES. Subsequent confirmations count as credit for Canada.

(7) Confirmations from any of these islands, dated prior to June 1, 1958, count as DXCC credit for Leeward Islands. However, if such credit already has ben given, no further credit as a separate country can be given for that particular island.

(8) Confirmations from any of these islands, dated prior to June 1, 1958, may be counted as DXCC credit for Windward Islands. However, if such credit already has been given, no further credit as a separate country can be given for that particular island.

(9) For UD6, Azerbaijan; UF6, Georgia; and UG6, Armenia, shown in the Continent column as "Asia," should be counted as "Europe" for the I.A.R.U.'s "Worked All Continents (WAC)" award. However, for the "Worked All Europe (WAE)" and similar awards in which European countries are involved, these three countries are considered as "Asia."

(10) Confirmation from Singapore, dated on or after April 1, 1946, count as separate country for DXCC credit.

(11) Confirmations from Laos, dated on or after July 20, 1955, count as separate country for DXCC credit; previously counted as part of French Indo-China (F18), listed in DELETED COUNTRIES. French Indo-China was placed on banned list as of December 21, 1950, and subsequent dated confirmations do not count as credit for DXCC. French Indo-China also divided into Cambodia (3W8) and Viet Nam (3W8) as of July 20, 1955, as separate countries. No DXCC credit given at present; see listing in BANNED COUNTRIES.

(12) Confirmations from Israel, dated on or after May 14, 1948, count as separate country for DXCC credit.

(13) Confirmations from Ghana, dated on or after March 5, 1957, count as DXCC credit for Ghana. Confirmations dated prior to that date count as DXCC credit for Gold Coast (Togoland). See ZD4 in DELETED COUNTRIES listing.

(14) Country has no regularly assigned prefix.

(15) Confirmations from French India dated prior to November 1, 1954, count as separate country for DXCC credit; French India became part of India (VU2) on that date.

(16) Tannu Tuva removed from ARRL Countries List on Aug. 1, 1955.

(17) Contacts dated August 13, 1960 or later will count for Central African Republic.

(18) Contacts dated Aug. 15, 1960 or later count for Congo Republic.

(19) Contacts dated Aug. 17, 1960 or later count for Gabon Republic.

(20) Contacts dated Aug. 11, 1960 or later count for Chad Republic.

(21) Contacts dated Aug. 7, 1960 or later count for Ivory Coast.

(22) Contacts dated Aug. 1, 1960 or later count for Dahomey Republic.

(23) Contacts dated July 20, 1960 or later count for Mali Republic.

(24) Contacts dated June 30, 1960 or earlier count as Karelo-Finnish Republic. Contacts dated July 1, 1960 or later count as European S.F.S.R.

(25) Contacts dated Aug. 5, 1960 or later count for Voltaic Republic.

(26) Contacts dated July 20, 1960 or later will count for Mauritania.

(27) Contacts dated Aug. 3, 1960 or later count for Niger Republic.

(28) Contacts dated July 1, 1960 or later count for Sonrali Republic.

(29) Contacts dated June 30, 1960 or earlier count for this country.

(30) Contacts dated June 20, 1960 or later count for Senegal Republic.

(31) Contacts dated Oct. 1, 1958 or later count for Republic of Guinea.

(32) Contacts dated July 1, 1960 or later will count for Ruanda-Urundi. Contacts prior to that date count for Belgian Congo.

(33) Confirmations from Tangier dated June 30, 1960 or earlier count as separate country for DXCC credit. Subsequent confirmations count as Morocco.

(34) Contacts dated Aug. 6, 1960 or earlier count for Fr. West Africa.

(35) Contacts dated August 16, 1960 or earlier will count for French Equatorial Africa.

(36) Wrangel Island removed from ARRL Countries List as of Septemmer 1, 1960.

(37) Goa, Damao and Diu removed from ARRL Countries List as of January 1, 1962. Became part of India (VU2).

BANNED COUNTRIES LISTING[4]

International Telecommunications Union agreements provide that "radiocommunications between amateur stations of different countries shall be forbidden if the administration of one of the countries concerned has notified that it objects to such radiocommunications."

Since several governments have thus notified the ITU, the Federal Communications Commission has issued a public notice on December 21, 1950 which forbids United States radio amateurs from communicating with amateurs in these countries. Any confirmations dated during these restricted periods will not be accepted for DXCC credit by the ARRL.

Check the "DXCC Notes" column in the "Operating News" section of QST magazine each month for the latest information on these BANNED COUNTRIES.

The following listing shows these countries with which communications by amateur radio have been banned for certain periods. These countries currently are not on the banned list and thus appear in the OFFICIAL COUNTRIES listing elsewhere in this issue. Confirmations for eligible periods should be recorded there.

Prefix	Country	Period That Country Was on Banned List
EQ	Iran	Dec. 21, 1950 to May 1960.
HL	Korea	June 1, 1953 to October 18, 1957.
JA	Japan (Nationals Only)	December 21, 1950 to October 15, 1952.
OD5	Lebanon	December 21, 1950 to October 15, 1952.
OE	Austria (Nationals Only)	December 21, 1950 to April 1, 1954.
PJ	Netherlands West Indies	December 21, 1950 to March 11, 1952.
XW8[11]	Laos	Dec. 21, 1950 to July 20, 1955 and Nov. 6, 1960 to Aug. 25, 1961.

The following tabulation with red background indicates those countries on the banned list as of Apr. 1, 1962. Only confirmations from these countries dated prior to December 21, 1950, will be accepted for DXCC credit, may be listed below.

Prefix	Official Country	Continent	WAZ Zone	
HS	Thailand	Asia	26	
PK1, 2, 3	Java	Oceania	28	
PK4	Sumatra	Oceania	28	
PK5	Netherlands Borneo	Oceania	28	
PK6	Celebes and Molucca Is.	Oceania	28	
3W8[11]	Viet Nam	Asia	26	

DELETED COUNTRIES LISTING

The countries listed below have appeared on ARRL Official Countries Lists for certain periods since November 15, 1945. Confirmations from these countries dated in accordance with instructions in FOOTNOTES will be recognized for DXCC credit.

Prefix	Official Country	Continent	WAZ Zone	
CR8[3, 37]	Damao & Diu	Asia	22	
CR8[37]	Goa	Asia	22	
CN2, KT1, EK[33]	Tangier	Africa	33	
FF8[34]	French West Africa	Africa	35	
F18[11]	French Indio-China	Asia	26	
FN[15]	French India	Asia	21, 22	
FQ8[35]	French Equatorial Africa	Africa	36	
I1[5]	Trieste	Europe	15	
I5[29]	Italian Somaliland	Africa	37	
UA0[36]	Wrangel Island	Asia	19	
UN1[24]	Karelo-Finnish Rep.	Europe	16	
VO[6]	Labrador, Newfoundland	N. America	2	
VQ6[29]	British Somaliland	Africa	37	
ZD4[13]	Gold Coast (Togoland)	Africa	35	
9S4[2]	Saar	Europe	14	
	Tannu Tuva[14, 16]	Asia	22	

ZONE CHECK LIST FOR "WAZ" AWARD

WAZ Zone	Listing of Prefixes in Zone	
1	KL7, VE8	
2	VE2, VO2	
3	K6,7, VE7, W6,7	
4	K4,5,9, 0, VE3,4,5,6, W4,5,9,0	
5	FP8, K1,2,3,4, VE1,2, VP9, W12,3,4	
6	XE, XF	
7	FO8, HK0, HP, HR, KS4, KS4B-, KZ5, PY0, TG, TI, TI9, VP1, YN, YS	
8	CM, CO, FG7, FM7, FS7, HH, HI, KC4, KG4, KP4, KV4, PJ2M-, VP2,5,6,7	
9	FY7, HK, PJ, PZ1, VP3,4, YV, YV0	
10	CP, HC, HC8, OA	
11	PY, ZP	
12	CE, CE0	
13	CX, LU, LU-Z, VP8	
14	CT1,2, DJ, DL, DM, EA, EA6, EI, F, G, GC, GD, GI, GM, GW, HB, LA, LX, ON4, OY, OZ, PA0, PI1, PX, SL, SM, ZB2, 3A	

ZONE CHECK LIST FOR "WAZ" AWARD

WAZ Zone	Listing of Prefixes in Zone	
15	FC, HA, HE, HV, I1, IS1, IT1, M1, OE, OH, OH0, OK, SP, UP2, UQ2, UR2, YU, ZA, ZB1	
16	UA1,2,3,4,6, UB5, UC2, UN1, UO5	
17	UA9,0, UH8, UI8, UJ8, UL7, UM8	
18	UA9,0	
19	UA9,0	
20	JY, LZ, OD5, SV, TA, YK, YO, ZC4,6, 4X4	
21	AP, EP, EQ, HZ, MP4, UD6, UF6, UG6, VS9A, 9K, 9O, YA, YI, 4W1, 9K2,3	
22	AC3, AC5, AP2, (CR8), VU2,4, 4S7, 9N1	
23	AC4, BY, JT1	
24	BV(C3), BY, C9, CR9, VS6	
25	HL, HM, JA, KA, KR6	
26	(FI8), HS, VU5, XW8, XZ2	
27	DU, KC6, KG6, KG6I, 3W8	
28	CR10, JZ0, VK9, VK0, VR4, VS1,4,5,9, ZC5, 9M2	
29	VK4,6,9, ZC3	
30	VK1,2,3,4,5,7,0	
31	KB6, KH6, KJ6, KM6, KP6, KW6, KX6, VR1,3, ZM7	
32	FK8, FO8, FU8, FW8, KS6, VK9, VR2,5,6, YJ1, ZK1,2, ZL, ZM6	
33	CN2,8,9, CT3, EA8,9, (EK), FA, (KT1), 3V8	
34	ST2, SU, 5A	
35	CR4, CR5, (FF8), TD8, TR8, TT8, TU2, TY, TZ, ZD1,3, 5N2, 5U7, 5V, 6W8, 9G1	
36	CR5, CR6, EA0, (FQ8), TJ, TL8, TN8, VQ2, XT2, ZD7,8, 5T, 7G1, 9Q5, 9U5	
37	CR7, ET2, ET3, (I5) VQ1,4,5,8, (VQ6), VS9A, ZD6, 5H3, 6O1,2	
38	ZD9, ZE, ZS1,2,3,4,5,6,7,8,9	
39	FB8, FR7, VK0, VQ8,9, ZS2, 5R4, Aldabra Islands	
40	KG1, LA, OX, TF, UA0	

HAM NEWS

TUBES

presents **HOW-TO-DO-IT IDEAS**
from the 999 radio amateurs at
GENERAL ELECTRIC

A bi-monthly publication of the RECEIVING TUBE DEPARTMENT
Owensboro, Kentucky, U. S. A. • Editor — E. A. Neal, W4ITC

G-E HAM NEWS is available free from authorized **G-E Tube** distributors. Some distributors mail copies locally to their customers.

A low-cost direct-mail subscription plan is available to persons residing in the United States and its possessions (including APO and FPO numbers). Subscription rates are:

One Year (6 issues)	$1.00
Two Years (12 issues)	$2.00
Three Years (18 issues)	$3.00
Five Years (30 issues)	$4.00

Enclose check or money order for U. S. currency for the proper amount above made payable to "General Electric Company."

Residents of Canada may subscribe to **G-E HAM NEWS** for $1.00 per year from the Canadian General Electric Company, Ltd., Electronic Tube Marketing Section, 189 Dufferin Street, Toronto 3, Ontario, Canada. Enclose check or money order made payable to: "Canadian General Electric Company, Ltd."

Distribution of **G-E HAM NEWS** in more than 40 foreign countries is handled through the International General Electric Company. A listing of outlets is available from the **G-E HAM NEWS** office. Or, write to: Customer Inquiry Section, International General Electric Company, 159 Madison Avenue, New York 16, New York, U. S. A.

UNITED STATES CHECK LIST FOR "WAZ" AWARD

State	Call Area	WAZ Zone	
Alabama	4	5	
Alaska	KL7	1	
Arizona	7	3	
Arkansas	5	4	
California	6	3	
Colorado	0	4	
Connecticut	1	5	
Delaware	3	5	
Florida	4	5	
Georgia	4	5	
Hawaii	KH6	31	
Idaho	7	4	
Illinois	9	4	
Indiana	9	4	
Iowa	0	4	
Kansas	0	4	
Kentucky	4	4	
Louisiana	5	4	
Maine	1	5	
Maryland (incl. D. C.)	3	5	
Massachusetts	1	5	
Michigan	8	4	
Minnesota	0	4	
Mississippi	5	4	
Missouri	0	4	
Montana	7	4	
Nebraska	0	4	
Nevada	7	3	
New Hampshire	1	5	
New Jersey	2	5	
New Mexico	5	4	
New York	2	5	
N. Carolina	4	5	
N. Dakota	0	4	
Ohio	8	4	
Oklahoma	5	4	
Oregon	7	3	

UNITED STATES CHECK LIST FOR "WAZ" AWARD

State	Call Area	WAZ Zone	
Pennsylvania	3	5	
Rhode Island	1	5	
S. Carolina	4	5	
S. Dakota	0	4	
Tennessee	4	4	
Texas	5	4	
Utah	7	3	
Vermont	1	5	
Virginia	4	5	
Washington	7	3	
West Virginia	8	4	
Wisconsin	9	4	
Wyoming	7	4	

CONTINENT CHECK LIST FOR "WAC" AWARD

Continent	Prefix	Official Country	WAZ Zone	
Africa				
Asia				
Europe				
N. America				
Oceania				
S. America				

HAM NEWS

TUBES

Available FREE from your G-E Tube Distributor

MARCH-
APRIL,
1962
VOL. 17, NO. 2

GE TUBES
HAM NEWS

MAY-JUNE, 1962 20 CENTS

3-WAY VHF'ER

A 50—150-MC. VHF RECEIVER

By Jack Najork, K9ODE

Taking the youngsters to the airport to watch the big jets zoom in? Take along this compact little VHF receiver and let them listen to the pilots and control tower talking on the 118 megacycle aircraft frequencies. With a range of 49 to 150 megacycles, the Three-Way VHF'er will also tune in the 50 and 144-megacycle amateur bands, Civil Air Patrol frequencies, commercial FM broadcast stations and some TV sound channels.

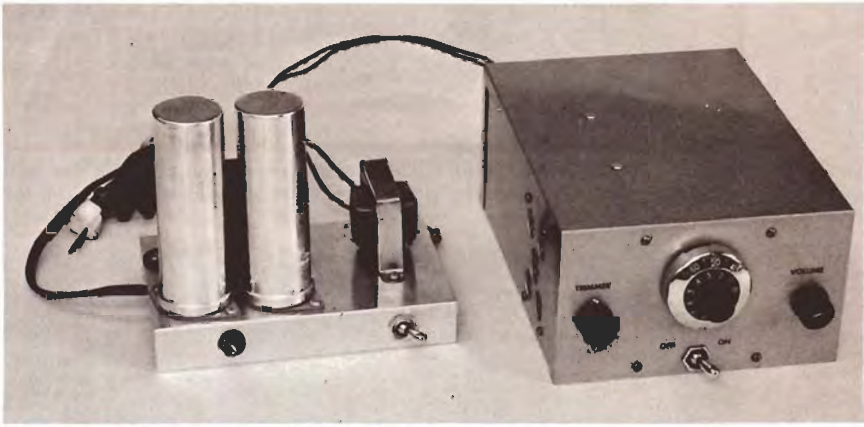

COMPLETE VHF RECEIVER and companion power supply for AC operation. Borg Microdial was used on this model for tuning.

DESIGNED around the newer series of automobile-type tubes which require only 12 volts DC plate supply, the *Three-Way VHF'er* can be used either at home or in the car without the need for the usual mobile vibrator or transistor power supply. Total current drain of the complete receiver is approximately 1 ampere at 12 volts DC so there is no danger of depleting the car battery during extended listening periods.

For maximum flexibility the receiver is designed for three different types of operation through the use of two plug-in modules. As shown in the block diagram, Fig. 1, the unit may be operated as:

a. VHF tuner with audio output fed to an existing amplifier;
b. VHF converter with output on the broadcast band to feed into the station receiver or auto radio;
c. Complete VHF receiver with self-contained audio amplifier.

Of course, it is not necessary to construct both plug-in modules if only one type of operation is desired. However, the use of modules helps anticipate the needs of those who make the life of the construction article author hectic by requesting information on how to build one, "just like it except . . ."

THE BASIC RECEIVER circuit consists of a 12EK6 pentode operating as a tuned RF stage feeding a second 12EK6 in a superregenerative detector. While this combination cannot be expected to compare in sensitivity and selectivity to the more elaborate crystal-controlled converter and station receiver combination, it does a good job on the stronger signals and delivers a lot of performance for a modest investment.

Since the VHF spectrum is relatively uncrowded, the receiver's band-width of approximately 300 Kilocycles is not a major disadvantage but rather, permits non-critical tuning of AM stations and also good slope detection of wide-band FM broadcast stations. Narrow-band FM signals—police, fire and commercial services—cannot be received satisfactorily with this receiver because the narrow frequency swing of these signals will develop very little audio output from the detector. The inherent AVC action and impluse noise limiting characteristics of the superregenerative detector are important features if the set is to be used for mobile operation.

Continuous frequency coverage from 49 to 150 megacycles is obtained without bandswitching or plug-in coils by use of a *Mallory Inductuner* which was widely used some years ago in TV receiver front ends. A good source of *Inductuners* is the back-room and basement graveyards of defunct TV sets in TV repair shops. The Inductuner front end can be easily identified by the lack of a "click" type channel selector switch. *Crosley*, *Emerson* and *Dumont* are some of the manufacturers who incorporated the *Inductuner* in 10 and 12-inch TV receivers.

K9ODE OPERATES the three-way VHF receiver (top) in his office, and (bottom) in his automobile. Receiver in car is mounted on brackets hung from the sides of G-E Transistorized Progress Line (TPL) Two-way radio. Jack is District Sales Manager in Chicago for General Electric's Communication Products Department. His previous article in **G-E HAM NEWS** was "Inductive Tuning For High-C RF Oscillators" (September-October, 1961, Vol. 16 No. 5).

IN THIS ISSUE

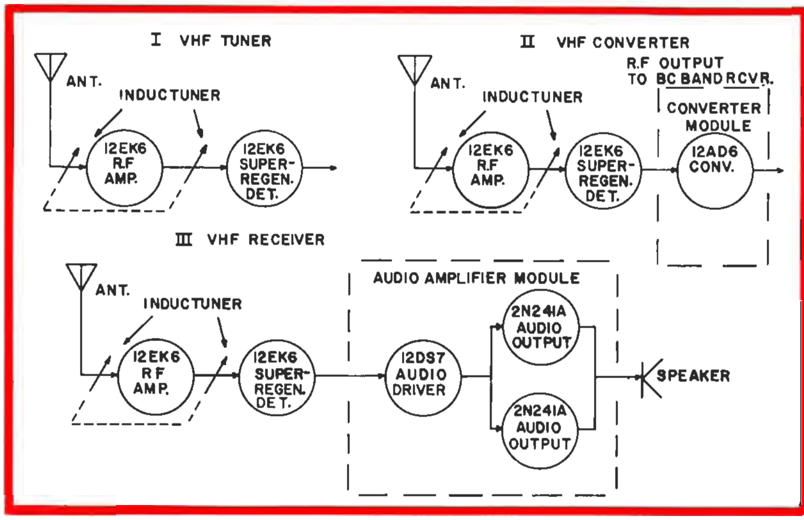

FIG. 1. BLOCK DIAGRAM of the three-way VHF receiver, showing the possible choices of (1) VHF tuner; (2) VHF converter; (3) a complete receiver with built-in audio amplifier and speaker.

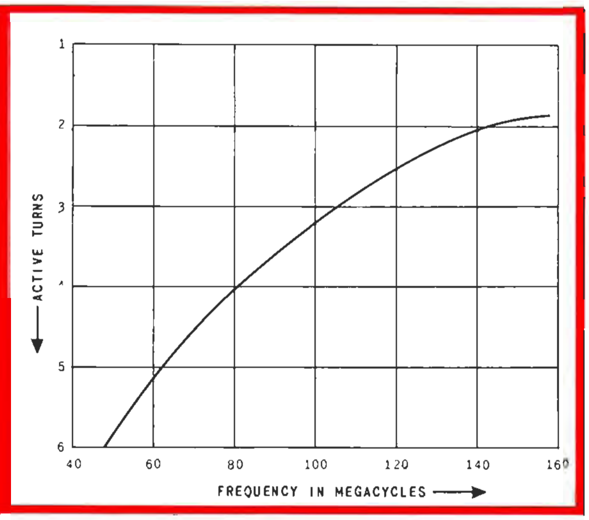

FIG. 2. TUNING CURVE for the VHF receiver constructed by K9ODE showing the approximate active number of Inductuner turns in the circuit to cover the range from 50 to 150 megacycles.

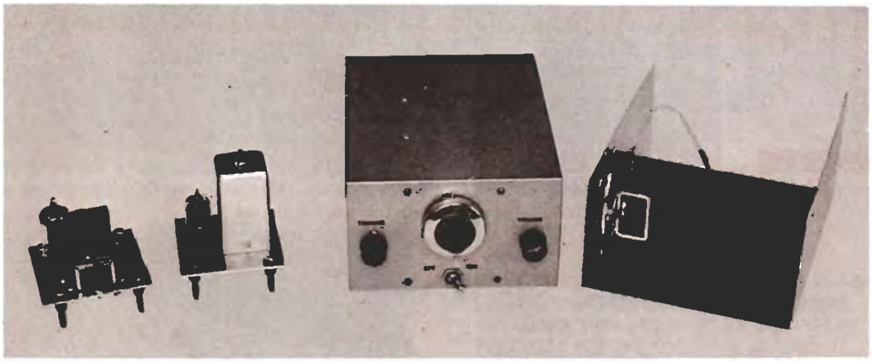

VHF RECEIVER is shown with other half of cabinet holding speaker, and the two plug-in modules; (left) the audio amplifier module; and the converter module.

The usual *Inductuner* TV front end covered a range of 54 to 220 megacycles; however, in this receiver the upper tuning limit is dictated by the superregenerative detector circuit which stops "supering" around 155 megacycles. Frequency coverage Vs. tuning dial rotation is shown in Fig. 2.

CIRCUIT DETAILS —

The 12EK6 RF stage in the schematic diagram, Fig. 3, is a conventional pentode amplifier. But, unlike standard tube circuits, screen dropping and cathode bias resistors are not required. Plate and screen voltages are fed directly from a 12 to 15-volt DC source, and a high value grid resistor develops contact potential grid bias. With a plate supply of only 12 volts or so, a cathode bias resistor would reduce the effective plate voltage to less than ten volts, so a more efficient way of developing grid bias must be used.

One section of the *Inductuner* is used to tune the grid circuit of the RF amplifier. A front panel tuning capacitor in series with the bottom of the *Inductuner* permits trimming the RF stage to compensate for reactance introduced by various types of antennas and transmission lines. The antenna is coupled directly to the grid of the RF stage through a small coupling capacitor. Although this is not the ideal method of matching a low impedance transmission line, the continuously variable Inductuner does not permit the usual tapped input coil connection.

Plate voltage for the RF stage is fed through RFC_1 and the output of this stage is capacitively coupled to a triode-connected 12EK6 superregenerative detector. The usual regeneration control is not needed because the detector superregenerates smoothly without critical setting of plate voltage. Output of the detector is fed through a miniature audio interstage transformer to the front panel volume control and then to the "audio" terminal on the rear of the cabinet.

Resistor R_3 connected across the volume control prevents "fringe howl", an audio oscillation sometimes encountered with regenerative transformer-coupled detectors. If a transformer different than that specified on the parts list is used this resistor may not be required. With some types of transformers (including the one used in this receiver) the detector does not actually howl but the audio output sounds extremely hollow. For a given transformer, R_3 should be as high in value as possible consistent with elimination of this condition.

The two tube portion of the receiver can be used by connecting the audio output to the phono input jack of the station receiver or to an existing audio amplifier or hi-fi amplifier with high impedance input.

HAM NEWS
TUBES

presents HOW-TO-DO-IT IDEAS
from the 999 radio amateurs at
GENERAL ELECTRIC

A bi-monthly publication of the RECEIVING TUBE DEPARTMENT
Owensboro, Kentucky, U. S. A. • Editor — E. A. Neal, W4ITC

G-E HAM NEWS is available free from authorized G-E Tube distributors. Some distributors mail copies locally to their customers.

A low-cost direct-mail subscription plan is available to persons residing in the United States and its possessions (including APO and FPO numbers). Subscription rates are:

One Year (6 issues)	$1.00
Two Years (12 issues)	$2.00
Three Years (18 issues)	$3.00
Five Years (30 issues)	$4.00

Enclose check or money order for U. S. currency for the proper amount above made payable to "General Electric Company."

Residents of Canada may subscribe to **G-E HAM NEWS** for $1.00 per year from the Canadian General Electric Company, Ltd., Electronic Tube Marketing Section, 189 Dufferin Street, Toronto 3, Ontario, Canada. Enclose check or money order made payable to: "Canadian General Electric Company, Ltd."

Distribution of **G-E HAM NEWS** in more than 40 foreign countries is handled through the International General Electric Company. A listing of outlets is available from the **G-E HAM NEWS** office. Or, write to: Customer Inquiry Section, International General Electric Company, 159 Madison Avenue, New York 16, New York, U. S. A.

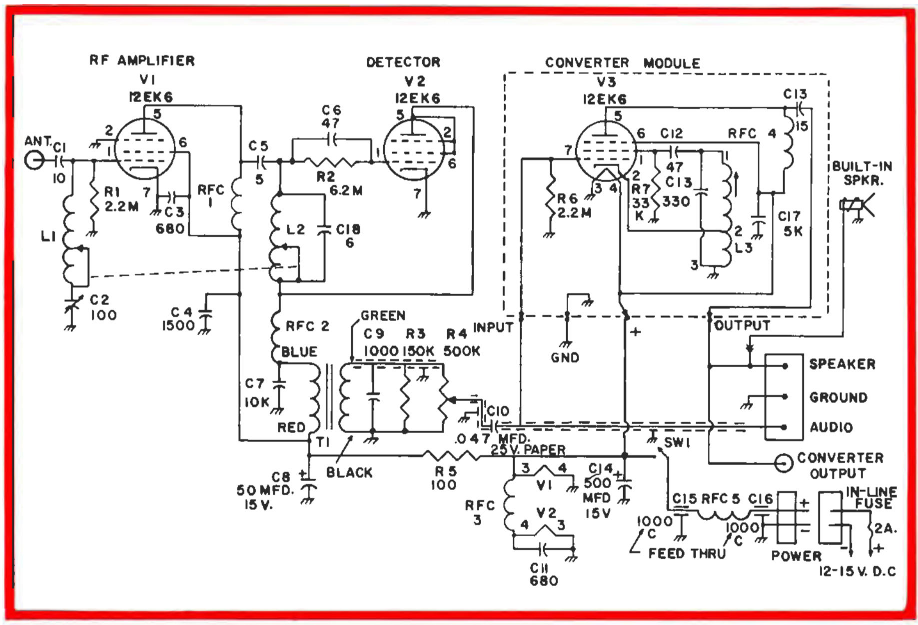

FIG. 3. SCHEMATIC DIAGRAM of the basic VHF receiver. Note simple RF circuitry made possible by low-voltage auto rodio tubes. All fixed capocitors are mica or ceramic with volues in picoforads unless otherwise indicated. Resistance are in ohms, ½-watt rating unless marked.

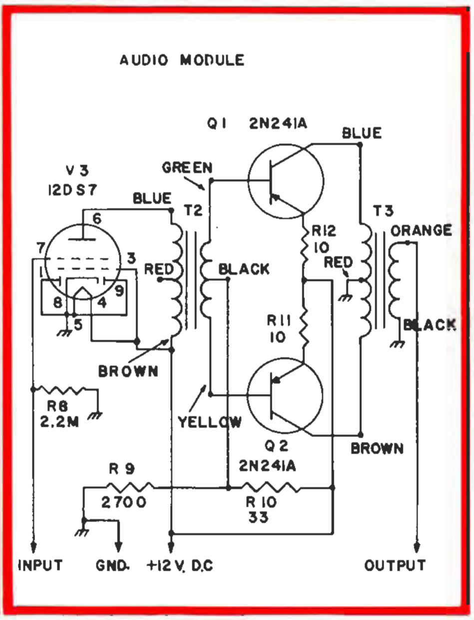

FIG. 4. AUDIO AMPLIFIER schematic diagram which can be constructed as a plug-in module, or built into the camplete receiver. Transistor output stage provides about 1-watt output.

To use the receiver as a converter or as a complete receiver with self-contained audio, the appropriate module is plugged in. Four banana type jacks and plugs on the receiver chassis and modules automatically make the required input, output and power connections when a module is plugged in and it is then only necessary to make connections to terminals on the rear of the cabinet. When the converter module is used a length of coaxial cable (RG-174/U or RG-59/U) terminating in a phono-connector type jack is plugged into the "converter" jack and the other end of this line is then connected to the antenna input terminal of the broadcast receiver.

The converter module consists of a 12AD6 heptode which operates as an electron-coupled, modulated oscillator with output in the broadcast band. Audio output from the supperregenerative detector is fed into the signal grid of the 12AD6 to modulate the oscillator circuit made up of the number one grid,

TABLE I—PARTS LIST—3-WAY VHF'ER

C_8....50-mfd.,50-voltelectrolytic (G-EQT1-15).
C_{14}, C_{20}....500-mfd., 15-volt tubular electrolytic (G-E QT1-30).
C_{18}, C_{19}....1500-mfd., 50-volt con type electrolytic (G-E XC1-27).
CR_1 to CR_4....100-volt, 600-ma. rectifiers (G-E 1N1692).
L_1, L_2....2.0-uh per section 2- or 3-section 6-turn spiral Inductuner[2].
L_3....adjustable inductance iron-core broadcast receiver oscillator coil (J. W. Miller No. 73-Osc. or equivalent).
L_4....Secondary of 6.3-volt, 1-omp. filament transformer; (Stancor P-6134).
Q_1, Q_2....G-E 2N241-A or GE-2 PNP AF autput tronsistors.
RFC_1, RFC_2....Approx. 10 uh., 60 turns, No. 28 enameled wire closewound on 2.2-megohm, 1 watt resistor.
RFC_3....Approx. 2 uh., 30 turns, No. 24 enomeled wire closewound on a $\frac{3}{16}$-inch diometer form (Ohmite Z-144).
RFC_4....2.5-mh. four-pi type RF choke (National R-100, 215 mh., or equivalent).
S_1, S_2....SPST toggle switch.
T_1....miniature interstage transformer, 10,000-ohm primary, 90,000-ohm secondary (UTC type S-2, or equivalent).
T_2....interstage transformer, 400-ohm primary, 2,000-ohm secondary, center tapped (Triad type TY-34X, or equivalent).
T_3....Output transformer, 200-ohm primary centertapped, to 4—8-ohm voice coil (Triad TY-31X, ar equivalent).
T_4....12.6-volt, 2-amp. filament transformer, 115-volt primary (Thordarson T-26F27).
V_1, V_2....G-E 12EK6 RF pentode tube.
V_3....G-E 12AD6 pentagrid converter tube.
V_4....G-E 12DS7 space-charge tetrode tube.
Speaker....2½-inch midget oval PM (Newark Electric type 46X029).
Diol....Borg type 1321 10-turn Microdial.
Cabinet....3½ x 6 x 8-9 8-inch Minibox, grey hammertone finish (Bud CU-2109A).

[2] A 3-section spiral type Mallory Inductuner was advertised for $2.95 on page 113 of the March, 1962 issue of **CQ**, by **Barry Electronics Corp.**, 512 Broadway, New York 22, N.Y.

TOP VIEW of the receiver showing the Inductuner behind the two 12EK6 tubes, and T_1 to their right. Modules plug into banono jacks in open area at rear of receiver.

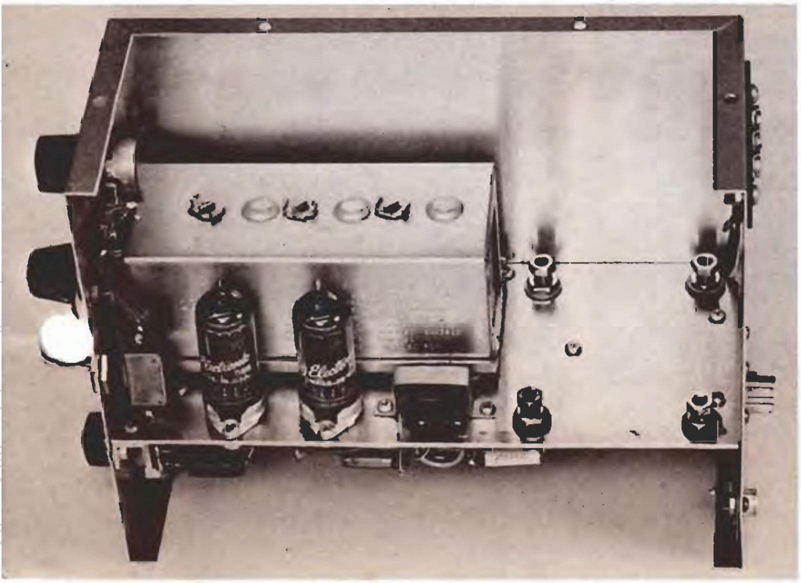

BOTTOM VIEW of the receiver, showing simple wiring and the insulating washers an three of the four banana jacks. Non-insulated jack is in the lower left position.

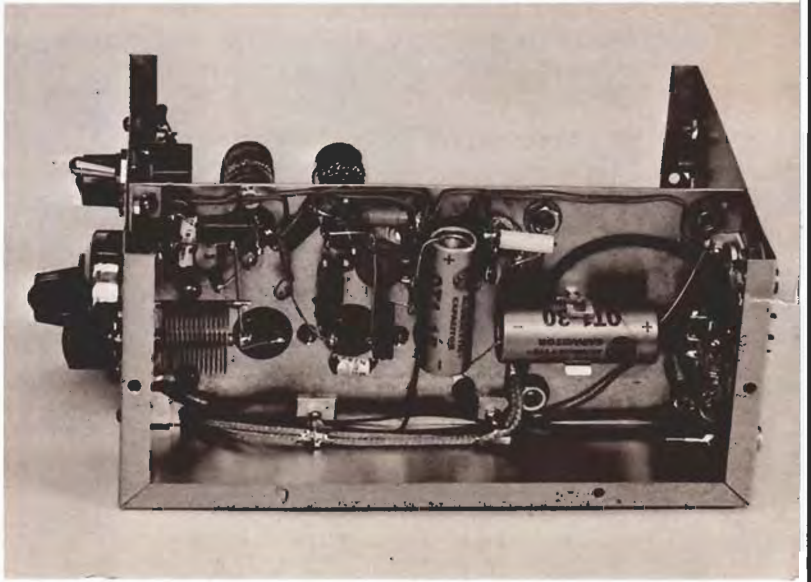

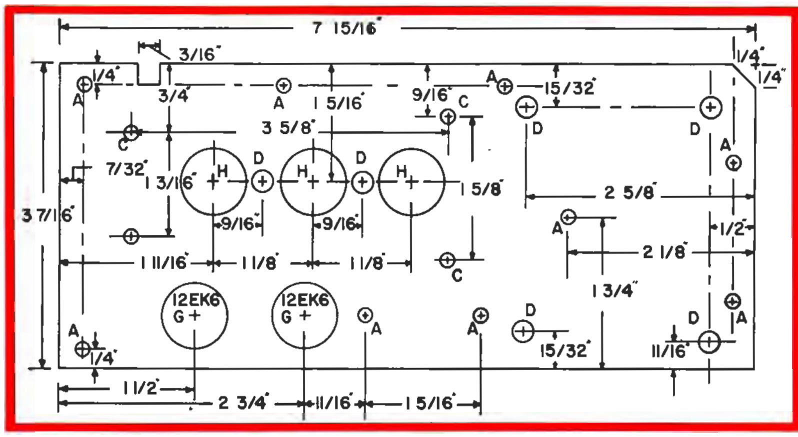

FIG. 5. CHASSIS LAYOUT DIAGRAM for the VHF receiver. Layout for a 3-section Inductuner is shown. Hole sizes are given in TABLE II—HOLE SIZE CHART. Chassis material is 1/16-inch thick aluminum.

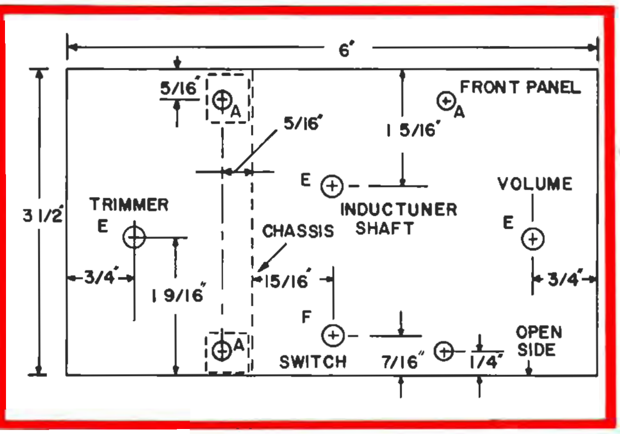

FIG. 6. FRONT PANEL LAYOUT for the VHF receiver. The Inductuner shaft should be centered in the panel hole to avoid binding. Hole sizes are given in TABLE II—HOLE SIZE CHART.

cathode and screen. RF output is taken off the plate and fed via a small coupling capacitor to the "converter" jack. The modulated signal is then tuned in on the broadcast receiver in conventional fashion. Adjustment of the tuning slug in the oscillator coil permits setting the output of the converter to a clear portion of the broadcast band. Like the 12EK6, the 12AD6 Heptode requires only 12 volts DC for plate and screen potential.

The audio module shown in Fig. 4 is made up of a transformer-coupled 12DS7 space-charge tetrode transformer-coupled to a pair of G-E 2N241A transistors in class "B". The 12DS7 is unlike a conventional tetrode in that the number one grid (grid nearest the cathode) is not the signal input grid. In the 12DS7 this is a space-charge grid connected directly to the 12 volt DC plate supply. This grid accelerates electron flow and permits the tube to operate much more efficiently from the low potential plate supply.

Signal voltage is fed into the number two grid and audio output is taken from the plate in the usual manner. Resistance coupling such as is usually employed in conventional audio stages cannot be used with any degree of success with the 12-volt series tubes because the voltage drop across the plate load resistors would lower the effective plate voltage below useable limits.

The 2N241A output transistors develop approximately ¾ watt output to drive either the internal or an external speaker. A small 2½-inch oval speaker is included on the cabinet and its output is adequate for home station use. For mobile operation a larger, more efficient external speaker should be used to overcome the higher noise level usually encountered.

The 8-ohm speaker output terminal is paralleled with the converter output jack to eliminate the need for a separate plug and socket on the module and chassis. When the converter module is used, the external and internal loudspeaker connections should be removed, otherwise the loudspeaker voice coil will shunt the converter output and decrease the signal level fed to the broadcast receiver. A slip-pin connector is used to disconnect the built-in loudspeaker for converter operation.

A low-pass filter consisting of feed-thru capacitors C_{15}, C_{16} and RFC_5 is used in the 12-volt DC input lead to prevent ignition noise from feeding into the receiver. If mobile operation is not contemplated this filter can be eliminated and the power connection run directly to the on-off switch, S_1. The receiver power input cable should contain an in-line two ampere fuse as protection against melted ignition system wiring in case the receiver develops an internal short.

CONSTRUCTION —

The receiver is built into a standard gray hammertone finish aluminum mini-box measuring 3½ x 6 x 8 inches (*Bud* CU-2109 or similar). One end of the cabinet is used as the front panel so that only 3½ x 6 inches are required for under-the-dash mobile mounting. A strip of 14-gauge aluminum 3 7/16 x 7⅞ inches serves as the main chassis. If a bending brake is available this chassis can be fabricated with right angle bends which are then bolted to the "U" shaped cabinet enclosure. In lieu of this, the chassis can be cut to size and small right-angle brackets can be used as shown in the photographs to secure the plate to the cabinet with No. 4 machine screws and nuts. Two angle brackets are used on each of the three sides which come in contact with the cabinet.

The main chassis drawing, Fig. 5, shows the location of the necessary holes. It is advisable to check the dimensions of the Inductuner mounting holes because these may vary — depending on the vintage of the Inductuner used — and they may not agree with those shown on the drilling diagram. The *Inductuner* is shimmed up from the chassis 3/32 of an inch to permit the plastic terminal strips to clear, since these project from the bottom of the unit. If the specified *Borg* Model 1321 *Microdial* is used the Inductuner shaft must extend from the front panel by 11/16 to 13/16 of an inch, so do not cut this shaft until the final position of the inductuner is determined.

The chassis plate is positioned inside the cabinet so that the Inductuner shaft is exactly centered on the panel end of the cabinet. These dimensions are shown on the front panel drawing, Fig. 6.

No. 10 machine screws are used to secure the Inductuner to the chassis and these screws thread into the existing threaded holes on the unit. Slip soldering lugs under the two screws nearest the cabinet side as these points will be

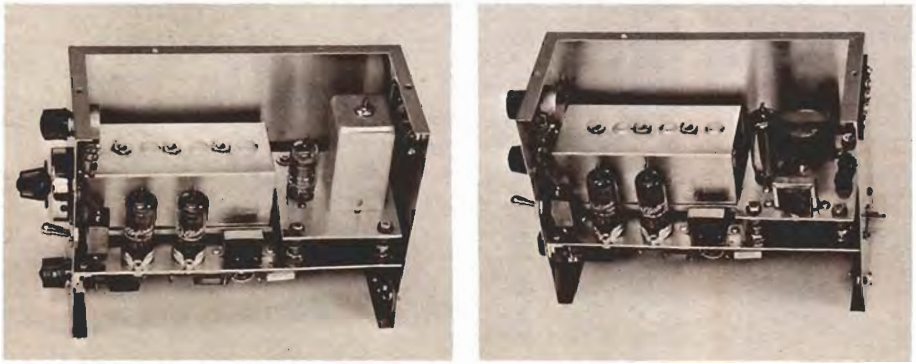

SIDE VIEWS of the VHF receiver showing (left) the converter module plugged in, and (right) the audio amplifier module in place. All connections are made through the four banana plugs, as shown in the schematic diagram, Fig. 3.

REAR VIEW of the receiver, showing the positions of the antenna and output jacks, power plug and audio terminal strip.

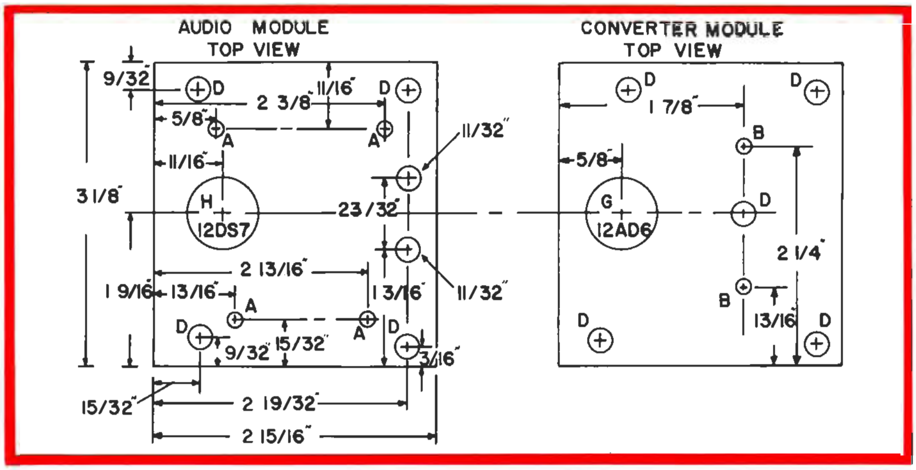

FIG. 7. LAYOUT DIAGRAMS for the converter and audio module subchassis. Material is also 14-gauge aluminum. Locate the holes for the banana plugs from the matching jack holes in the main chassis.

TABLE II—HOLE SIZE CHART

"A" drill—No. 31 (.120) clears 4-40 screw.
"B" drill—No. 26 (.147) clears 6-32 screw.
"C" drill—No. 9 (.196) clears 10-32 screw.
"D" drill—¼-inch in diameter.
"E" drill—⅜-inch in diameter.
"F" drill—½-inch in diameter.
"G" socket punch—⅝-inch in diameter for 7-pin miniature tube socket.
"H" socket punch—¾-inch in diameter for 9-pin miniature tube socket.

used as ground connections. The lug near the front panel is used as a ground point for trimmer capacitor C_2 and the rear lug is used as a ground point for electrolytic capacitors C_8 and C_{14}.

A two terminal strip bolted an inch forward of the 12EK6 RF socket serves as the tie point for the antenna coax cable and for the termination of RFC_1 and plate-by-pass C_4. No. 18 tinned bus wire is used for RF connection 5. One heater pin, the cathode and the suppressor of the RF tube socket are strapped together and grounded to a lug under the front terminal strip mounting screw.

The No. 4 machine screws and nuts which secure transformer T_1 are used to secure terminal strips to the rear of the detector socket. A three terminal strip is used nearest this socket to serve as tie points for RFC_3, the 100 ohm resistor R_5 and one end of electrolytic capacitor C_8. The detector RFC_2 is connected between this terminal strip and the *Inductuner* terminal.

The two terminal strip under the rear screw of the transformer bolt serves as a tie point for by-pass capacitor C_9, audio coupling capacitor C_{10}, and the transformer lead connections to the shielded wire running to the volume control through a small cut-out in the chassis. The two No. 4 screws and nuts which balance up the two screws used to secure the chassis to the front panel are also used as grounding tie points for the shielded cable routed across the inside of the front panel to the volume control.

Insulated shoulder washers are used to mount the module banana jacks on the chassis. The location of these should be staggered as shown to prevent the possibility of a module being plugged in incorrectly. A small cut-out on the cabinet and corner of the chassis permits routing of leads to the speaker and audio terminal strip.

Feed-through capacitors C_{15} and C_{16} are soldered to small, right-angle brackets bolted to the screws which secure the power input plug. RFC5 is then soldered between these capacitors.

RG-174/U coaxial cable, ⅛ inch in diameter, is used to connect the antenna input terminal to the front terminal strip. If this type cable is not readily available the slightly larger RG-59/U can be used.

The 2½-inch loudspeaker specified on the parts list just fits nicely between the bottom of the chassis and the cabinet cover plate and this clearance should be checked if a different type of speaker is used. This location of the speaker is to be preferred because sound is directed out on the driver's side of the cabinet when the receiver is mounted on the usual center of the automobile dash above the floorboard hump.

The *Borg Microdial* is designed for collar mounting to *Micropot* potentiometers and the instruction sheet accompanying the dial does not show any other method of mounting. The following procedure should be followed. Disassemble the dial by loosening the No. 3 set screw on the outer edge of the dial. (Do not try to loosen the screw on the end of the knob). Slide off the back plate. Remove the dial locking plate.

The back plate has a series of small holes which will accept No. 4 machine screws. Carefully center the backplate on the front panel *Inductuner* shaft making sure the No. 3 set-screw hole is toward the bottom of the panel so the dial will be correctly oriented. Using the backplate as a template, mark two mounting holes on the panel and drill with a No. 28 drill. Bolt the back plate to the panel using flat-headed No. 4 machine screws and nuts. Getting the nuts on the bolts will take a bit of doing because the bolt ends will be partially behind the *Inductuner*. Remove the *Inductuner* cover to gain more access if required.

With the back plate bolted to the panel, set the *Inductuner* shaft to maximum inductance. (Wipers on outside edge of concentric coils). Set the dial mechanism to 0-0 and slip it on the back-plate. Tighten the No. 3 set screw and the Allen head set screw in the knob. If the dial binds at some spots it may be necessary to remove the front portion and reposition the back plate slightly until good alignment between the *Inductuner* shaft and dial is obtained.

Construction of the modules is straight-forward and all necessary details can be seen in the photographs, and layout drawings, Fig. 7.

A-C POWER SUPPLY—

The diagram for an AC power supply for 117 V AC operation of the receiver is shown in Fig. 8. Approximately ¾ of an ampere at 12 volts DC is required when the unit is operated as a complete receiver. A well-filtered supply is necessary because of the high audio gain of the receiver and this is assured by the three section filter.

Twelve volts AC from the secondary of the filament transformer is rectified by the full-wave bridge rectifier using four 1N1692 silicon rectifiers. The filter choke, L_1 consists of the secondary winding of a small 6.3 volt filament

(Continued on page 7)

FIG. 8. SCHEMATIC DIAGRAM for the AC power supply for the VHF receiver. Components are described in TABLE I—PARTS LIST.

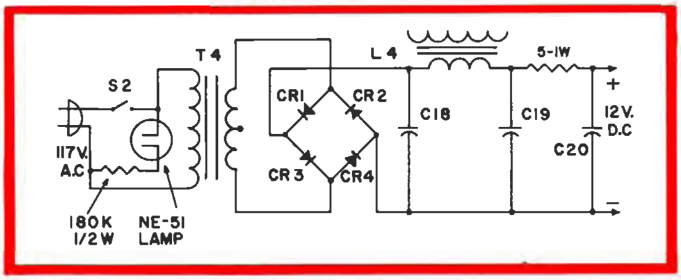

BOTTOM VIEW of the plug-in modules, with (left) the converter module using a 12AD6 pentagrid converter tube, and (right) the audio amplifier module. The 2N241A output stage transistors plug into 3-pin miniature transistor sockets.

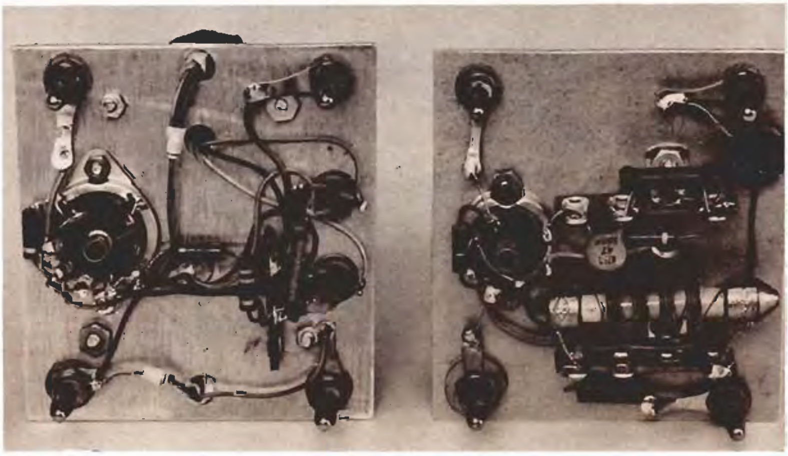

MOBILE RADIO CONTROL UNIT

By John J. Borzner, 20Q2918

While the operation of radio equipment is not exceedingly difficult, the amateur operating mobile also has to contend with the driving of the automobile. This alone is a full time job. In order to simplify radio operation and provide a safety factor necessary in traffic, the finger tip remote control head described here is recommended for installations where the radio equipment cannot be located close to the driver's seat.

In the installation shown in the picture, a Heathkit transceiver model GW-10 for the Citizen's Band is mounted in a convenient spot in the car. This does not always allow easy operation of controls. Attaching a small remote control headat a handy location on the dash will provide easy operation of the set. The circuit can be easily adapted to work with many other transceivers and separate transmitter-receiver units on the market.

This unit consists of a key-lock on/off switch, power pilot light, volume control, and hanger for the microphone. Since this transceiver is crystal controlled on both transmit and receive, no tuning facility is required.

The wiring of the control head is very simple and uncluttered. By using subminiature parts the box size can be reduced even more. 12 volts DC is brought directly into the switch, as shown in the schematic diagram, Fig. 1. From the switch the voltage goes to the pilot lamp (one side of which is grounded), then to the existing transceiver fuse.

Volume is controlled by means of a pad across the receiver speaker. The receiver volume/on-off switch is left to the ON FULL position. The schematic is self-explanatory on the pad operation. Only one wire into, and two wires out of the control head, are required. The control head is grounded when mounted under the dash.

The pilot lamp can be eliminated if the transceiver already has one; however, a bright light nearer to eyelevel avoids the possibility of a dead battery due to the set being left on accidentally while the car is parked. The microphone shown has a push-to-talk switch built in. If the mike to be used has the talk/receive switch on the cabinet, a similar switch should be added to the control head.

Only a simple cabinet is required; and it consists of a small utility box cut to the dimensions shown or to the sizes required by the parts that you elect to use. Mount all parts rigidly and anchor all wiring securely as for all mobile applications. Crimp wires to their connections and solder extra well. Road vibrations are hard on electronic equipment.

Installation of the control head in the car depends entirely on the make. It would be impossible to go into mountig details with such a variety of dashboards available. However, this is one of the basic objectives of the unit; it should be easy to mount in almost every car on the road, large or small. The most difficult task is in locating the transceiver itself. Again this will depend on the car, but it is probable that a convenient spot out of the way will be found.

After locating the transceiver and mounting the control unit it is ready to be tested on the air. If the radio is mounted too far from the control unit the microphone cable may need to be lengthened so that too long a stretch doesn't result. To operate the set, simply turn on the key lock switch. You may also need to adjust the squelch on the receiver section but once set, it should not need further adjustment. With pre-set receiver and transmitter (usually crystal controlled, a must for Citizen's band) all that remains is to talk into the microphone.

The unit shown has gone many miles in the author's car, covering most states on the eartern seaboard on both business and pleasure and has been well worth the construction time in added convenience.

TABLE I—PARTS LIST

1 Bud Minibox to suit (about 4 x 2¼ x 2¼).
1 ½-inch green jewell panel light assembly (DIALCO 810M or 810B).
1 6 or 12 volt GE bulb to fit pilot lamp.
1 "L" pad 4 to 10 ohms (outdoor theater type recommended to withstand mobile use).
1 Lock type auto ignition switch, available at auto stores (or Arrow-Hart and Hegeman type 81715L).
1 Knob for pad (National type HR).
Optional decal set Tekni-Calls (Allied Radio Part No. 39K052).
Mounting hardware necessary to suit installation.

THE MOBILE RADIO CONTROL UNIT is installed under the radio in 20Q2918's "compact" car. The transceiver controlled by the unit is at the right, while an amateur-band converter occupies the space below the instrument panel. John Borzner is a technical writer in the Program Documentation Unit of General Electric's Defense Systems Department in Syracuse, New York. In addition to radio work, where he is active on the Citizen's Band, he has built in several refinements to his Lowrey spinet organ, including electronic reverberation.

John also has authored several articles for electronics magazines. One of his latest offerings was "Economical Highway FM" in the November, 1960 issue of **Radio-Electronics.**

FIG. 1. SCHEMATIC DIAGRAM of the transceiver control unit. A wide choice of components similar to those in Table I—Parts List, are available and may be substituted.

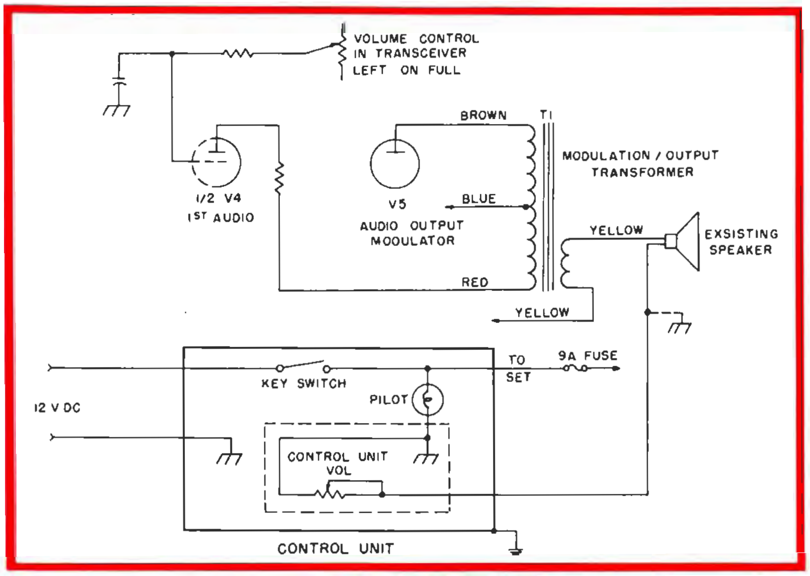

3-WAY VHF'ER

(Continued from page 5)

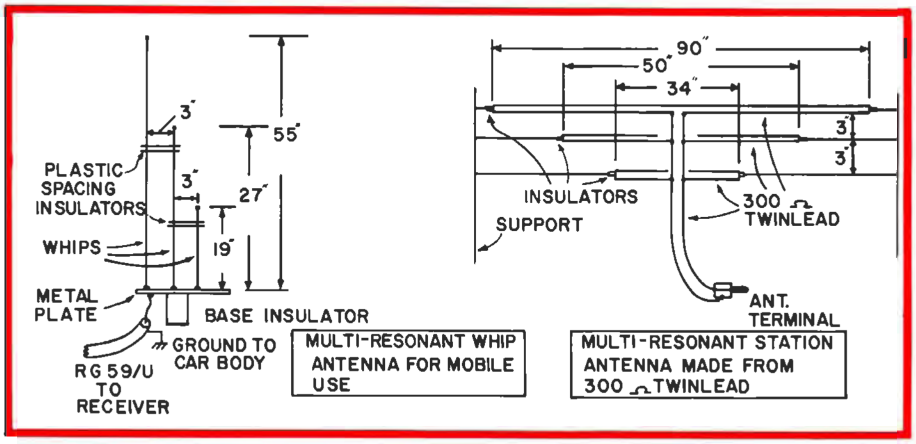

FIG. 9. CONSTRUCTION DETAILS of simple antennas which can be used with the VHF receiver to provide efficient pickup of signals over the 50 to 150-megacycle tuning range.

transformer. Any small transformer can be used here provided the DC resistance of the secondary winding does not exceed two ohms. Neon lamp NE-51 is connected in series with R_1, 180K, to serve as a pilot light. The supply is built on a small 4 x 6 x 1-inch aluminum chassis (Bud CB-1620).

TUNE-UP AND ADJUSTMENT —

The VHF portion of the receiver can be checked by feeding the audio output into the station receiver's phono input jack or into an audio amplifier (leave modules out). With 12 volts DC applied, the familiar superregenerative rush should be heard when the tubes warm up. If the detector does not superregenerate check RFC_2 and make sure the fine wire with which it is wound has not broken.

Frequency coverage can be checked with a grid-dip meter or signal generator. The low end of the band should hit between 48 and 49 megacycles with the detector components shown in the parts list. If the low end of the range is too high in frequency increase the value of fixed capacitor C_{18} across the detector *Inductuner* to 7 or 8 mmf. If desired, a small mica trimmer can be used for C_{18} to set the low frequency end of the range. The receiver should superregenerate to approximately 150 to 160 megacycles before giving up with a howl of protest.

To check the converter module plug it in and connect the converted output to a broadcast receiver. If only an AC-DC entertainment or a transistor type broadcast receiver is available it can be used by running an insulated lead from the converter output jack to the vicinity of the broadcast receiver loop antenna.

The tuning slug in the oscillator coil must be screwed in until approximately ¼-inch of the tuning screw protrudes above the oscillator can, otherwise this screw will not clear the cover of the cabinet. With the screw in this position the converter signal should be heard around 600 kilocycles on the broadcast band. Adjust the tuning screw on the oscillator can to hit a clear spot.

If converter output is desired higher in frequency in the broadcast band, capacitor C_{12} across the oscillator coil can be reduced in value as required.

Once the converter oscillator is tuned in on the broadcast receiver, tune in a signal on the VHF receiver and increase the setting of the volume control on the VHF receiver until its output modulates the oscillator. The average VHF signal will modulate the oscillator from 60 to 80 percent and the VHF receiver volume control can generally be turned full on and left there. Further volume adjustment can then be made with the broadcast receiver volume control.

If initial tests are made with the audio amplifier module plugged in for loudspeaker operation be sure to double check the polarity of the power leads. Reversed polarity will ruin the output transistors.

As with any other simple receiver, an efficient antenna system should be used for best results. For mobile operation a resonant quarter-wavewhip cut to the desired frequency and fed with RG-59/U is recommended. Unfortunately, no antenna system other than a special one such as a *Discone* will give uniformly good pick-up over the entire frequency range capable of being covered by the receiver. If good, all-frequency operation is desired for mobile operation the multi-resonant whip antenna shown in Fig. 10A will give good results in the most active portions of the spectrum. This antenna consists of three separate whips which can be made from discarded automobile antenna whips or aluminum rod. Secure the bottoms of the whips to a metal plate and use Lucite or other plastic spacers as shown in the diagram to maintain whip spacing of 3 inches. This antenna will give good pick-up on the 30- and 144-megacycle ham bands as well as on the 100-megacycle FM band and the 118-megacycle aircraft frequencies.

A similar antenna system for home station use is shown in Fig. 10B. This multi-resonant antenna is constructed from lengths of 300-ohm twin-lead which are secured to supports as high in the air as possible.

With either of the simple antenna systems shown the three-way VHF'er will give good reception of commercial FM stations 15 to 20 miles away[1]. Depending on their altitude, commercial aircraft can be copied out to 30 to 40 miles. Local 50 and 144-megacycle stations will also give good copy but don't expect to hear that 144-megacycle DX station your buddy down the street is copying with a 417A converter and 75A4 receiver!

OTHER FREQUENCIES —

In anticipation of requests for operation of the receiver on frequencies other than 49 to 150 megacycles a number of tests were made with the *Inductuner* tuned circuits. The frequency coverage of the receiver can be lowered to 27 megacycles by adding fixed inductance in series with the *Inductuner*. However, when this is done the effective frequency coverage is drastically curtailed because the *Inductuner* becomes a small part of the effective tuned circuit and tuning range drops to less than five megacycles. Leaving the *Inductuner* "as is" and simply adding fixed capacity across each variable coil doesn't appeal to the superregenerative detector which refuses to "super" under these conditions.

If extended lower frequency coverage is desired the better approach would be to replace the Inductuner with a two-gang tuning capacitor and suitable coils for the desired frequency range. Have fun!

FIG. 2. MECHANICAL DETAILS of the control unit are shown in this view. Actual cabinet size will depend on components used, and the space available in the vehicle for the control unit.

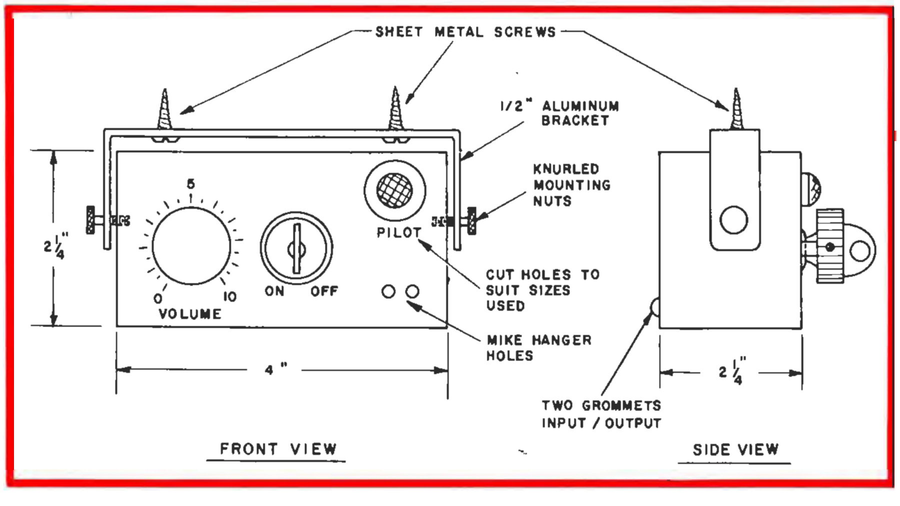

---

[1] To copy FM stations the receiver should be tuned slightly to one side or the other of the carrier to permit slope detection. A high pitched audio squeal may be heard intermittently or continuously on some FM stations. This is caused by the superregenerative detector quench frequency beating against the supersonic tone signal transmitted by some stations for multi-plex operations such as store-casting.

Recipient — 1961 EDISON RADIO AMATEUR AWARD

William G. Welsh, W1SAD

THRILL of far-away places is brought home to youngsters via amateur radio by William G. Welsh.

FRIENDLY help, anytime and anywhere, is the code by which the recipient of the 1961 Edison Award lives.

. . . an amateur radio operator who has voluntarily taught electronics to more than 2800 people — young and old — has been chosen to receive General Electric's 1961 Edison Radio Amateur Award.

Nominated by many persons in the Boston area — including the engineer-in-charge of the Boston FCC office, a Catholic Priest, and the director of a vocational high school — Welsh has devoted 20 to 30 hours weekly to his voluntary instruction work during the past ten years.

He has devised comprehensive courses of instruction which include eight 1800-foot code practice tapes as well as voluminous text material. He has run off hundreds of copies of his tapes free of charge and sent them to voluntary study groups in nearly every state in the nation and at least twelve foreign countries. In addition, he prepared a 70-page instructor's handbook to help others teach radio.

The quality of his instruction is indicated by the 75-percent average of his students finishing the courses, an exceptionally high ratio. He has taught classes at many locations in the Boston area, and for two seasons conducted classes seven nights a week.

He obtained a notary public's commission to help his students process applications for FCC examination, and arranged with the FCC office for special examination sessions. His wife, Mrs. Marie Welsh, W1COL, often assisted, grading examination papers, and teaching classes when Mr. Welsh was away on business trips.

(Mr. Welsh is now WA6VTL.)

6th EDITION—SPECIAL DX LOG ISSUE

The double-size 16-page 6th Edition of the Special DX Log Issue, published in March-April, 1962 (Vol. 17, No. 2), is now available from more than 700 G-E Tube Distributors in the United States, as usual. It contains an updated listing of ARRL Official Countries for the DXCC Award, zone list for WAZ award, United States list for WAS Award, plus listings of Deleted and Banned Countries, Cross Index of Official Countries, and other handy information for the DX operator. Copies may also be ordered by mail directly from the G-E HAM NEWS office address on page 2 at the following prices:

Single copies	20 cents
5 copies	50 cents
12 copies	$1.00
20 copies	1.50
30 copies	2.00
50 copies	3.00

Add 6 cents per copy for each extra copy above 50 ordered at one time.

HAM NEWS

Available FREE from your G-E Tube Distributor

MAY-JUNE
1962
VOL. 17, NO. 3

TUBES
HAM NEWS

JULY-AUGUST, 1962

SPECIAL REPORT ON VHF SSB

Presenting a 2-part series on VHF Sideband Equipment

PART I . . . In This Issue:

A COMPLETE 20-WATT, 144-MC. SSB EXCITER

By David W. Bray, K2LMG

PART II — In the September-October, 1962 Issue:

A 144-MC. DIRECT SSB GENERATOR & HETERODYNING SSB SIGNALS TO 144 MC.

By James V. O'Hern, W2WZR

Interest in SSB on the VHF amateurs bands — principally 50 and 144 megacycles — is growing rapidly. This two-part series in *G-E HAM NEWS* has been prepared by two long-time experimenters with VHF SSB techniques — and proven in hundreds of tests over a rugged 40-odd mile path between their stations. There's a *wealth* of good ideas in their circuits, choices of frequency conversion, and construction techniques. You'll find it's easy to modify or add to your present equipment and try VHF Single Sideband!

INTRODUCTION — It is not necessary to extol the advantages of single or double sideband on the high frequency amateur radio bands, but on the VHF bands where there is no QRM, just steady receiver noise, many people do not realize the advantages of single or double sideband. These advantages can largely be summed up as follows:

1. In order to achieve high power output with an amplitude modulated signal, a large audio amplifier of at least one-half the total input power to the transmitter is required. For one kilowatt transmitter this audio power output is extremely difficult and costly to achieve. However, a single sideband exciter of only 6 watts output is capable of driving a pair of 250-watt class beam pentode tubes in a linear amplifier to full 1200 watt peak effective input. If this same amplifier was used to amplify an amplitude modulated signal one finds that its efficiency is so poor that an amplifier which is capable of putting out 800 watts of SSB RF power delivers approximately 200 watts. Thus single and double sideband provide a simple means of producing a high power RF signal.
2. By theory and experimentation it has been shown that CW has a 17 db. advantage over amplitude modulation. That is; a transmitter capable of transmitting one kilowatt input fully amplitude modulated has the same transmitting range as a 20-watt transmitter which is operated on CW. This is all well and good if you want to use CW. However, it has also been shown that a single sideband emission is nearly as effective as CW. Actual tests on the 144-megacycle band have shown that, even though not exactly predicted by theory, a single sideband signal can be copied with the same ease as CW when the distance between stations is such that the signal strength of the received signal is very weak. Under these same conditions an amplitude modulated signal is indistinguishable. Therefore, single or double sideband do provide two very obvious advantages in the VHF bands: (1) equipment simplicity, and (2) talking power.

This article describes a 144-megacycle exciter which is capable of operating single sideband, double sideband, amplitude modulation and CW. It has a power output of approximately 6 watts which is adequate for local use or to drive a pentode-type kilowatt linear amplifier to full rated output. It also includes a tunable crystal oscillator with good stability and a voice operated control system.

The exciter is a phasing type single sideband generator which provides good carrier suppression and unwanted sideband rejection.

CIRCUIT DESCRIPTION — The Exciter consists of four basic circuits: (1) A phasing type single sideband generator operating on 25 megacycles; (2) a tunable crystal oscillator as the VFO; (3) a RF mixer and amplifier; and (4) a voice operated control circuit.

Each of the separate circuits which make up the Exciter are discussed in detail, and all references are made to the schematic diagram, Figure 1.

K2LMG DISPLAYS his 20-watt, 14-tube, 144-megacycle SSB exciter. Dave is a consulting engineer in the Advanced Radar and ECM Engineering group at General Electric's Advanced Electronics Center at Cornell University, Ithaca, New York. He has been with General Electric for 13 years and has participated in developing a number of advanced electronics, radar and weapons control systems. He is the author of articles in *QST* on measuring VHF station performance, and measuring antenna patterns using the sun. K2LMG since 1957, Dave is a senior member of IRE.

FRONT-PANEL VIEW of the complete exciter constructed in an 8x12½x8-inch steel cabinet. All controls used during normal operation are on the front panel. The National MCN dial tunes the VXO over 100-kilocycle segments.

IN THIS ISSUE

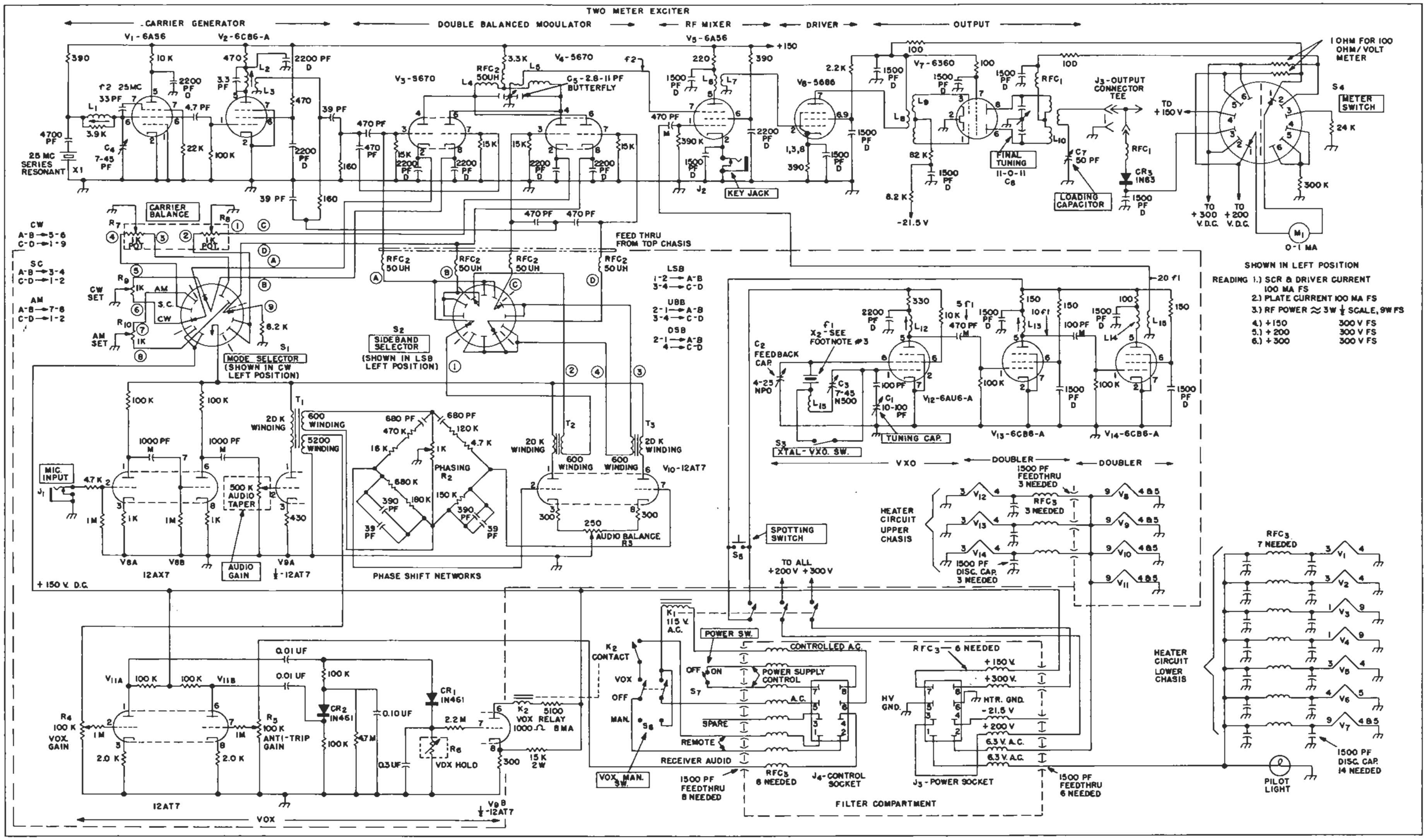

FIG. 1. MAIN SCHEMATIC DIAGRAM for the exciter. The panel controls are identified with rectangular boxes around their names. Resistances are in ohms, ½-watt rating unless otherwise marked. Capacitances are in picofarads (pf), or microfarads (mfd), as marked. Parts needing further identification are described in TABLE I—PARTS LIST, or TABLE II—COIL DATA. Circuits within dashed lines are in the upper sub-chassis section of the exciter.

TABLE I — PARTS LIST

C_1......8-100-pf variable, double bearings (Hammarlund MC-100-S).
C_2......4.5-25-pf ceramic trimmer, NPO (Centralab 822-AZ).
C_3, C_4......7-45-pf ceramic trimmer, N-650 (Centralab 822-BN).
C_5, C_6......2.7-10.8-pf per section miniature butterfly variable, 0.013-inch air gap (E. F. Johnson 160-211, type 11MB11).
C_7......3.7-52-pf midget air variable (Hammarlund HF-50 or equal).
J_1, J_2......2-circuit midget closed circuit phone jack.
J3......chassis type coaxial cable connector.
K_1......3-pole, double throw midget relay, 115-volt AC coil.
K_2......Single pole, single throw midget relay, 1,000-ohm, 8-milliampere DC coil (P&B type RS5D or equal).
L......Single layer coils; See TABLE I—COIL DATA, for details.
M_1......0-1 DC milliameter, 1½-inch diameter case (G-E type DN1).
R_1......500,000-ohm midget potentiometer, audio taper.

TABLE II — COIL DATA

R_2, R_7, R_8, 9_9, R_{10}......1000-ohm midget potentiometer, linear taper.
R_3......250-ohm midget potentiometer, linear taper.
R_4, R_5......100,000-ohm midget potentiometer, linear taper.
R_6......2.5-megohm midget potentiometer, linear taper.
S_1, S_2......4-pole, 3-position, 1-section rotory tap switch (Mallory 3243J, or equivalent).
S_3......SPDT rotory toggle switch (Arrow-Hart No. 1565-B, or equal).
S_4......2-pole, 6-position, 1-section rotory tap switch (Mallory 3226J; Centralab PA-2003, or equivalent).
S_5......SPST midget push-button switch.
S_6......DPDT 3-position center-off toggle switch.
T_1, T_2, T_3......midget encased audio transformer, 3 windings with impedances of 600, 5200 and 20,000 ohms. (These are the transformers used in the W2EWL Command Set SSB exciter, and are regularly advertised in QST for $1.39 each, 3 for $3.49, by Arrow Electronics, 65 Cortlandt Street, New York 7, N.Y.)
V_1-V_{14}......General Electric receiving tubes, types per Fig. 1.
X_1......Quartz crystal, 25,000 kilocycles, third-overtone type.
X_2......Quartz crystal, 5955 kilocycles; also see footnote 3.

NOTE: All coils wound with enameled wire unless otherwise noted.

L_1......12 turns, No. 28 wire, closewound on ⅜-inch form.*
L_2, L_{12}......35 turns, No. 28 wire, closewound on ¼-inch form.**
L_3......4 turns, No. 28 wire on bypassed end of L_2.
L_4......17 turns, No. 24 wire wound 8½ turns on both sides of L_5, on ¾-inch diameter coil form, no tuning slug.
L_5......3 turns, No. 20 wire at center of form for L_4.
L_6......6½ turns, No. 20 wire, ⅜-inch diameter, spacewound the diameter of wire.
L_7......3½ turns, No. 20 wire, ⅜-inch diameter, spacewound the diameter of wire and spaced ⅛-inch from L_6.
L_8......3 turns, No. 20 wire, ⅜-inch diameter, spacewound the diameter of wire.
L_9......5 turns, No. 20 wire, ⅜-inch diameter, spacewound diameter of wire in two 2½-turn coils spaced ⅜-inch.
L_{10}....6 turns, No. 20 wire, ⅜-inch diameter, spacewound diameter of wire, in two 3-turn coils spaced ⅛ inch apart.
L_{11}....1 turn, No. 20 wire, ⅜-inch diameter, at middle of L_{10}.
L_{13}....7 turns, No. 28 wire, ¼-inch diameter, closewound on ¼-inch diameter form.**
L_{14}....8½ turns, No. 20 wire, ⅜-inch diameter, spacewound the diameter of wire.
L_{15}....2½ turns, No. 20 wire, ⅜-inch diameter, spacewound the diameter of wire (see detail view of VXO for position).
L_{16}....50-75-uh.; 105 turns, No. 33 wire, closewound on ⅜-inch diameter slug-tuned coil form. (Cambion LS-3 coil form with red slug, or LS-3 5-MC. wound coil, green code.)
RFC_1..34 turns, No. 28 wire on 5/32-inch diameter molded form with end leads (½-watt resistor for form).
RFC_2..4 chokes required, 50-uh., pi-wound, midget RF chokes National type R-33, 50 uh., or equivalent.
RFC_3..24 chokes required, 5-uh., 34 turns, No. 22 wire, closewound on ¼-inch diameter powdered iron form with end leads (Grayhill No. 28YY1006-6, or equivalent).

*Use Cambion LS-3 phenolic coil form, ⅜-inch diameter, 1⅛ inches long, with white-coded iron tuning slug.

**Use Cambion LSM phenolic coil form, ¼-inch diameter, ¾-inch long with white-coded iron tuning slug.

THE CARRIER GENERATOR is a transitron oscillator (V_1) operating on 25 megacycles. This ocsillator is very stable. It uses the screen grid of a 6AS6 dual-control RF pentode as the plate of the oscillator, and the suppressor grid as the control grid.[1] The suppressor grid electrically follows the screen grid as the electron stream flows but yet controls the flow of electrons, materially contributing to the stability of the oscillator. The stability is also improved by forcing the crystal to run in a series resonant mode. Since this is a low impedance mode an L matching network transforms the low impedance crystal to a higher impedance to develop more voltage at the screen and control grids.

The power output is very low; therefore, it is necessary to follow the oscillator with a 6CB6 pentode (V_2) RF amplifier. Its control grid is coupled very loosely to the transitron oscillator by a 4.7-pf capacitor. The 4.7-pf capacitor and the interelectrode capacitance of the 6CB6 is a capacity divider thereby keeping the load on the oscillator small. The output of the buffer is coupled to the double balanced modulator by a four turn link (L_5) tightly coupled to the plate tank circuit (L_3 & 3.3-pf) of the buffer, providing a low impedance output to drive the rf phase shift network.

THE DOUBLED BALANCED MODULATOR consists of a pair of 5670 twin triodes (V_3 & V_4). Each of the balanced modulators suppresses the carrier and produces a double sideband suppressed carrier signal centered around the carrier frequency.

In order that the balanced modulator can suppress the carrier, the carrier signal is fed to the grids in parallel, and a push-pull audio signal to the grids.

The plates are also in push-pull, to provide cancellation of the audio and RF input signals.

One of the 5670 tubes connected as a balanced modulator is fed from an RF phase shift network which produces a 45 degree leading phase of the carrier. The other balanced modulator is fed from a phase shift network that produces a lag of 45 degrees from the carrier generator. Thus the net result is that the phase of one of the balanced modulators differs from the other balanced modulator by 90 degrees.

In addition, each balanced modulator is fed by two audio signals having a relative phase difference of 90 degrees. The output of the balanced modulators (V_3 & V_4) are fed to a common tank circuit (C_5-L_4) which combines the signals. This addition and cancellation in the output of the two balanced modulators whose carrier is phase shifted by 90° as well as a 90° phase shift of the audio input, produces a single sideband signal in the tank circuit.

AUDIO AMPLIFIER AND PHASE SHIFTER — The major problem with the phasing type single sideband generator is to provide a precise 90 degrees relative phase shift between the two push-pull audio signals required for each balanced modulator. This 90 degree phase shift must be precise across the voice range audio spectrum. In order to provide this phase shift a complicated network must be built. Usually this network is made up of resistance and capacitance values that are not readily available. However, a special phase shift network was developed that could be built out of standard resistor and capacitor values. Note that only the 16,000-ohm resistor has a 5 percent tolerance. All other values have 10 percent tolerance. The sideband suppression provided by this network is at least 30 db. To insure that ths suppression is as good as possible, the actual components used should be close to the specified values.

The audio amplifier itself is straight forward. It consists of three twin triode tubes; a 12AX7 and two 12AT7's. The 12AX7 (V_8) functions as a normal two-stage triode amplifier. The output of the second section feeds the first section of the 12AT7 (V_{9A}) which is transformer coupled (by T_1) to both the audio phase shift network and the VOX amplifier. The 600-ohm winding of T_1 feeds the phase shift network and the 5200-ohm winding drives the VOX amplifier.

The output of the phase shift network is a push-pull signal and is fed to an amplifier consisting of a 12AT7 (V_{10}) connected in push-pull with a balancing potentiometer (R_3) in the cathodes, and the plate of each connected to a separate output transformer (T_2 and T_3). The 600-ohm windings of each drive the 5670 double balanced modulator tubes.

In order to choose the desired sideband, the output of T_2 and T_3 is connected to a 4-pole, 3-position tap switch (S_2) as shown in Fig. 1. The lower sideband is chosen if transformer leads 1 and 2 from T_2 are connected to modulator grids A and B, respectively, and transformer leads Nos. 3 and 4 from T_3 are connected to modular grids C and D, respectively. To obtain lower sideband leads numbered 1 and 2 are interchanged. To obtain double sideband the modulator grids C and D are connected together in parallel and T_3 lead No. 3 is opened.

VARIABLE CRYSTAL OSCILLATOR — A stable but yet tunable oscillator can be achieved by using a quartz crystal which is "pulled" from its normal operating frequency by a series inductor (L_{15}). As the value of the inductor is changed, the frequency of oscillation will change proportionally.[2] However, since variable inductors are difficult to tune — and particularly in a linear manner — the actual value of the inductance is changed by placing a variable capacitor (C_1) in series with the inductor. A modified Pierce oscillator is achieved by placing the crystal and inductor, and a temperature compensating capacitor, between the screen and control grid of the 6AU6 pentode (V_{12}). The feedback circuit is then provided by the variable capacitor (C_2) and a zero temperature coefficient trimmer capacitor (C_3).

An ideal crystal frequency for 144-megacycle band operation is 5955 kilocycles, since no harmonics fall in the 144-megacycle amateur band and the crystal will pull very nicely at least 100 kilocycles. The 20th harmonic of this crystal is 119.10 megacycles. Mixing this frequency with 25 megacycles then produces a frequency of 144.1 megacycles.[3] To achieve the 20th harmonic the tank circuit in the plate of the oscillator is tuned to the 5th harmonic (29.775 Mc.). This frequency is doubled

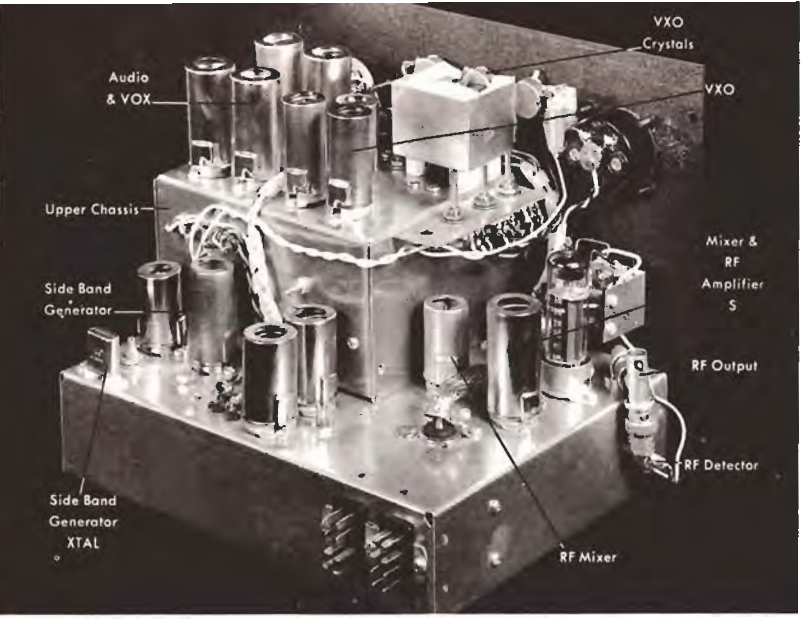

REAR VIEW of the complete exciter showing the upper sub-chassis assembled on the main chassis. Upper chassis contains the audio section, phase-shift networks, voice-controlled unit, and the VXO section. Main chassis contains the carrier oscillator, the RF SSB balanced modulator, and VHF mixers and amplifiers, plus control relays.

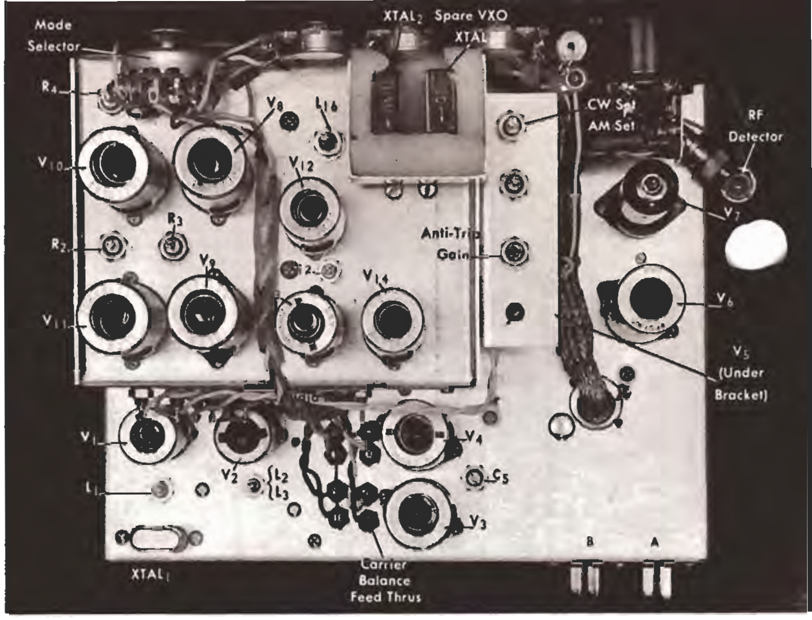

TOP VIEW, showing the locations of the tubes and other major components on the chassis. Power wiring runs between units in cables, and through feedthrough insulators in chassis. The crystals for the VXO are in the insulated metal container behind the center of the panel. Carrier crystal is in right rear corner of main chassis.

(59.550 Mc.) in the following 6CB6 pentode (V_{13}) stage and again doubled in the second 6CB6 pentode (V_{14}). The 119.1-megacycle output signal drives the control grid of the r-f mixer stage (V_5).

RF MIXER — Very often in single sideband equipment RF mixing is accomplished at a high level in order to avoid a large amount of straight through amplification on the output frequency. However, high level mixing is difficult to accomplish with good mixer stability, and in addition requires the use of relatively high power vacuum tubes in order to obtain the necessary signal level. In order to avoid the difficulties of high level mixing a low level mixer, which seems to have been overlooked in the VHF art, was used. This tube, a 6AS6 (V_5), has the same VHF capabilities as the 6AK5 pentode but yet has a suppressor grid which has sufficient control to act as a good signal grid. Therefore, the 119.1-megacycle signal can be fed directly into the control grid of V_5, and the single sideband signal at 25 megacycles can be fed to the suppressor grid. Using this arrangement the mixer is stable since the cathode is grounded. Bias is provided by self-bias operation of the control grid, and the single sideband signal is fed to a completely separate element of the tube. By tuning the plate of the tube to 144 megacycles and coupling it through a double tuned circuit into the following amplifier stage, a very clean 144-megacycle output signal is produced from this mixer.

RF AMPLIFIER — The first amplifier stage is a 5686 VHF pentode (V_6) operated as a class A amplifier. Double-tuned circuits are used from the mixer into its control grid, and into the following stage. The 5686, even though operated in class A, provides ample drive for the 6360 twin pentode (V_7) output stage, operated class AB1 with a fixed bias of −21.5 volts. The 6360 is operated push-pull and requires no neutralization because of its internal neutralized construction. The output of the push-pull tank is link coupled to the RF output connector. The 6360 operating in class AB1 provides about 6 watts CW output.

To measure the RF output of the exciter, the diode CR_3 and RF choke RFC_1 are mounted in a coaxial cable RF connector, and then plugged into a "Tee" connector in the output cable line, as shown in the rear and top views. A DC connection then runs to the meter control switch, S_4.

VOICE OPERATED CONTROL CIRCUITS — No single sideband transmitter is complete without the voice control circuitry. In this exciter a familiar type voice control circuit is used. The output of the audio amplifier from the 5200 ohm tap of the audio transformer is fed to one-half of the 12AT7 triode (V_{11A}). The output from the 500 ohm tap or loud speaker of the receiver is fed to the other half of the 12AT7 triode (V_{11B}). The output of V_{11A} from the audio channel is then rectified by diode CR_1 and used to charge a 0.3 mfd. capacitor with an adjustable discharge resistor of 2.5 megohms. This operates a control

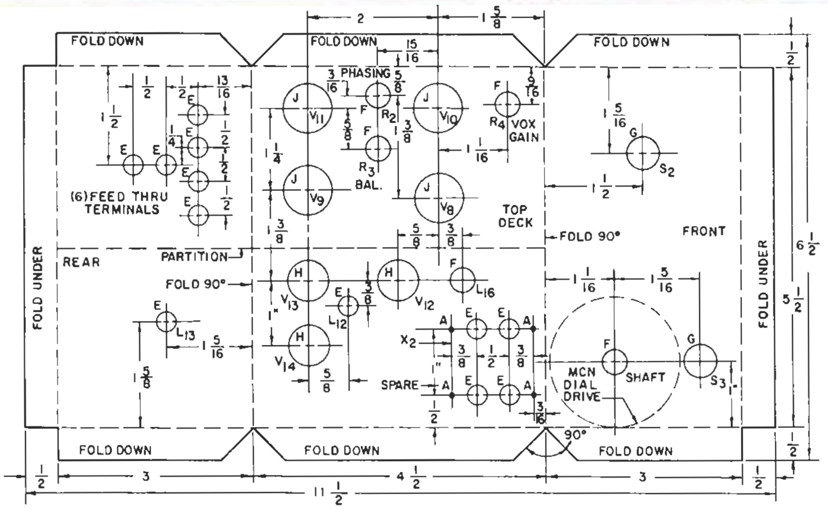

FIG. 2. **LAYOUT DIAGRAM** for the upper sub-chassis unit, showing the overall size of sheet aluminum required. Location of the shield partition across the center of the chassis is indicated by the dashed line. The metal is folded at the dashed lines before drilling holes, sizes of which are given in TABLE III — HOLE SIZE CHART.

TABLE III — HOLE SIZE CHART

"A" drill — No. 31 clears 4-40 screw.
"B" drill — No. 26 clears 6-32 screw.
"C" drill — No. 17 clears 8-32 screw.
"D" drill — No. 9 clears 10-32 screw.
"E" drill — 9/32-inch diameter.
"F" drill — 3/8-inch diameter.
"G" drill — 1/2-inch diameter.
"H" socket punch — 5/8-inch diameter for 7-pin miniature tube socket.
"J" socket punch — 3/4-inch diameter for 9-pin miniature tube socket.
"K" socket punch — 1 1/16-inch diameter for small octal tube socket.
"L" socket punch — 1 1/4-inch diameter for large receiving tube socket.

FOOTNOTES

[1] A technical discussion of the principles of operation of the 6AS6 transitron crystal controlled oscillator will appear in the next issue of G-E HAM NEWS, September-October, 1962 (Vol. 17, No. 5).

[2] Following is a reference listing of articles on the variable crystal oscillator:
"VXO—A Variable Crystal Oscillator,"
by Herman Shall, W3BWK,
QST, January, 1958, page 11;
"VXO-II Variable Frequency Crystal Exciter,"
by Herman Shall, W3BWK,
QST, July, 1959, page 37;
"A V.H.F. Variable Frequency Crystal Exciter,"
by H. J. Saborsky, W3KXI,
QST, November, 1960, page 27.

[3] To cover 144-148 megacycles with the exciter, crystal frequencies between 5950 and 6150 kilocycles may be used in the VXO. The 24th harmonic of crystals between 6000 and 6150 kilocycles falls within the 144-148 megacycle band, but does not cross the exciter output frequency.

relay tube, also one half of a 12AT7 (V_{9B}) with a 1,000-ohm, 8 ma. plate relay. To provide anti-trip, the output of the receiver amplifier (V_{11B}) is rectified by a negatively connected diode (CR_2) and also charges a long time constant circuit. This circuit back-biases the audio amplifier (V_{11A}) channel so that any output from the loudspeaker cancels the signal from the audio amplifier channel by not allowing diode CR_1 to conduct.

In addition to the choice of lower, upper and double sidebands on S_2, by adding a mode selector switch (S_1), the exciter can be placed in an AM or CW mode of operation. To provide AM, one of the double balanced modulators is simply unbalanced. This increases the carrier from its normal cancellation amplitude to any desired value. So that specific carrier level can be set, S_1 transfers one of the balanced modulator carrier balance potentiometers (R_7) to a new potentiometer (R_{10}) which is set at the desired AM carrier amplitude. In practice, only a small amount of carrier is required to make speech very intelligible. Therefore, if a high-power linear amplifier is used to follow this exciter most of the benefits of single sideband can be achieved by inserting a small amount of carrier so that the output modulation is 400 to 500 percent. The carrier output is then small enough to cause little increase in plate dissipation in the linear amplifier tubes, but will be very readible on those 144-megacycle receivers which cannot receive single sideband due to the lack of a B.F.O.

In the AM mode the use of only one sideband — upper or lower — is not detrimental to reception. Normal AM can be accomplished by throwing the exciter into the double sideband mode.

For CW, unbalancing one of the balanced modulators through R_9 to an extent which drives the linear applifier to full output provides a CW carrier. Keying is accomplished in the cathode of the RF mixer (V_5) through J_2. In addition to unbalancing the carrier, it is also desirable in the CW mode to disconnect the output of the audio amplifier. This eliminates the possibility of transmitting inadvertently modulated CW. The mode switch (S_1) performs these functions.

POWER SUPPLY — Power requirements of the complete 144-megacycle SSB exciter are:

6.3 volts at 5 amperes for heaters;
plus 150 volts DC at 35 to 115 ma.;
plus 200 volts DC at 25 ma.;
plus 300 volts DC at 70 ma.;
minus 22 volts for grid bias.

To assure optimum and stable performance of the exciter, the plus 150, 200 and 300-volt DC supplies should be regulated. A suitable power supply constructed by the author for his exciter will be described in the following issue, September-October, 1962 (Vol. 17, No. 5).

CONSTRUCTION DETAILS — Most of the construction of the exciter is self-explanatory through the pictures and mechanical layouts. However, some details may not be obvious and are explained in detail.

The upper chassis was fabricated with open sides from 18-gauge (0.040-inch thick) sheet aluminum 11½x6½ inches. It is trimmed and folded as shown in the upper chassis layout drawing, Fig. 2. Drill holes for the tube sockets and other parts at the locations marked. Make two end plates 3x6½ inches from the same sheet stock and fasten them to the flanges on the ends with No. 8 sheet metal screws. Also make a shield partition and fasten it in place as shown in Fig. 2.

The main chassis is a standard 7x9x2-inch type (*Bud* AC-406, or equivalent). Drill and punch holes as shown in the layout diagram for it, Fig. 3. Make shield partitions from 18-gauge aluminum at the locations shown by the dashed lines in Fig. 3, and the bottom view photo. Fit the shields in place and fasten them with No. 8 sheet metal screws.

Fasten the upper chassis down with No. 8 sheet metal screws driven up from the bottom side into the flanges on the bottom of the upper chassis. Also, punch the holes for the power sockets at the left rear corner.

The panel comes with the 8x12½x8-inch deep cabinet (*Bud* C-1746, or equivalent) and is 8x10 inches in size. Drill and punch the panel as shown in the layout diagram of Fig. 4. The upper and lower chassis, the National MCN dial, and shields should all be assembled temporarily to check on proper alignment before beginning the mounting of parts and wiring.

UPPER CHASSIS — The upper chassis is divided into two sections. On the right hand side facing the front panel is the audio section separated by a shield from the variable crystal oscillator section. The audio section is constructed on Vector socket assemblies, with the exception of the phase shift networks. In the right side detail view on page 7, note that these networks were constructed on a Vector circuit board and suspended under the tube socket for V_{10}. This was convenient, since this tube feeds the audio transformers and the phase shift network. Behind the audio transformers is the plate relay (K_2) for the VOX. The entire VOX was built on a Vector socket assembly with a small terminal board attached to the base of the post on the socket for V_{11} to hold those components which would not fit on the post.

The sideband selector switch (S_2) is mounted through the front of the audio section chassis and passes through the front panel. The mode selector switch (S_2) is mounted directly on the front panel just above the top chassis. In the variable crystal oscillator section of the top chassis, the tuning capacitor (C_1) is mounted directly on the underside as seen in the left side detail view.

The National MCN dial is mounted inside the upper chassis with only the shaft going through the front panel. A small bracket to the left of the top chassis holds three potentiometers for adjustment of receiver gain for the anti-trip circuit (R_5), the CW amplitude (R_9), and the AM amplitude (R_{10}).

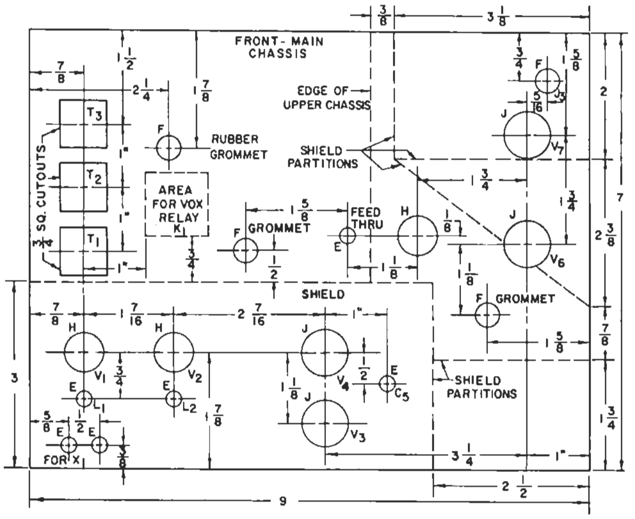

FIG. 3. MAIN CHASSIS layout drawing. Locations for shield partitions under chassis are shown by dashed lines. Upper chassis is fastened over the area indicated. Hole sizes are given in TABLE III — HOLE SIZE CHART.

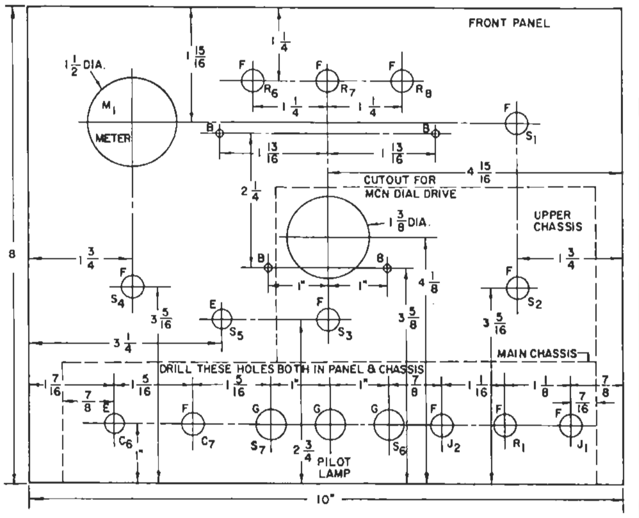

FIG. 4. FRONT PANEL layout diagram. Location of the main and upper sub-chassis are shown by dashed lines. Hole for the meter should be bored to fit the case of the particular meter used in construction.

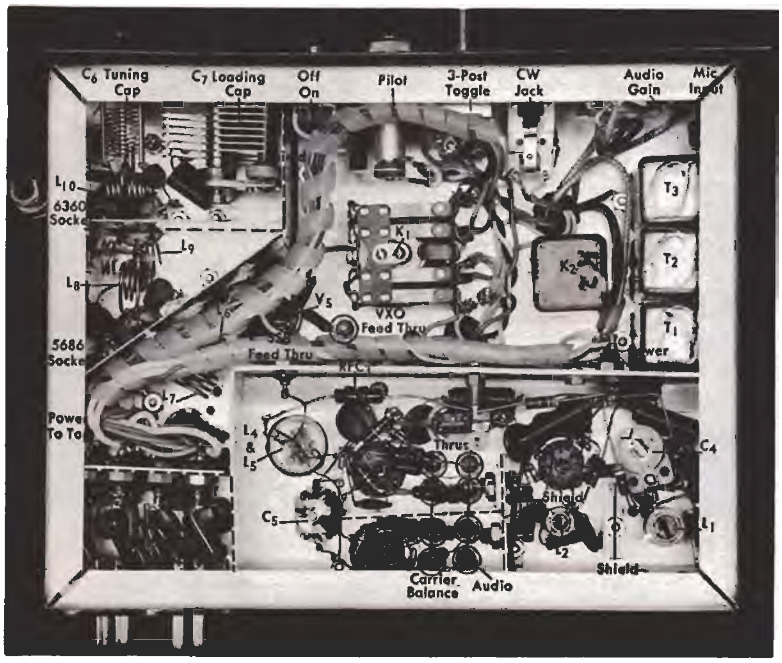

BOTTOM VIEW of the exciter showing the locations of small parts and wiring. Sheet aluminum shields are fitted around the sideband generator and VHF RF sections of the exciter. Note the group of feedthrough capacitors and small RF chokes in the power lead filter compartment at the lower left.

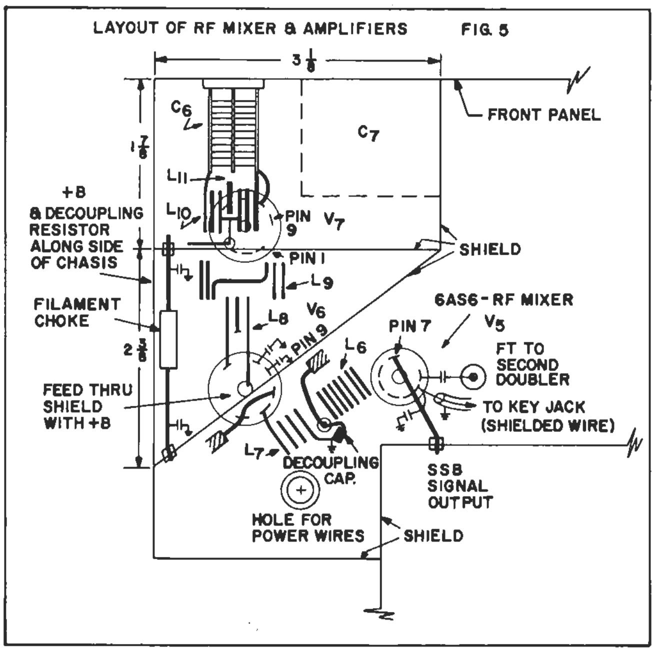

FIG. 5. VHF SECTION parts location diagram, for the mixer and amplifiers. This drawing is printed half actual size so that dimensions can be determined by measuring the diagram and multiplying by 2. All capacitors should have shortest possible leads. Connect 1500-pf. disc capacitors between all cathode and screen grid pins and chassis.

MAIN CHASSIS — The main chassis has four shielded areas. These consist of the single sideband generator, the RF assembly, the control section and the power plug section. Construction of the single sideband generator is seen in the bottom view. The output from the single sideband double balanced modulators (V_3 and V_4) passes through a feedthrough terminal in the shield directly to the suppressor grid pin of the RF mixer tube (V_5). The assembly of the 144-megacycle amplifier stages (V_6 and V_7) is detailed in the sketch of Fig. 5, in addition to the bottom view.

The control section in the middle of the main chassis contains the two relays, K_1 and K_2, plus the pilot light, control switches, key jack, and audio transformers. The power plug section compartment is filled with small RF chokes (RFC_3) and 1500-pf. ceramic feedthrough bypass capacitors mounted in the partition. These filters keep RF energy from leaking out of the exciter through the power leads.

The variable crystal oscillator will only be as stable as the frequency of the crystals. Because the crystal is operated in a parallel mode in which it is pulled from its normal operating frequency, it is more temperature sensitive than a normal crystal. Therefore, in order to insure good frequency stability as the exciter warms up two things must be done. The crystals must be mounted in an assembly as shown in the top view and preferably connected to the front panel by a metal strap in contact with the crystals to keep them at the temperature of the front panel.

This assembly is a simple aluminum frame which mounts on top of the crystal holders thereby providing thermal insulation from the upper chassis, and the aluminum frame reflects the radiant heat from the nearby tubes. Insulation around the crystal prevents additional heating. A metal strap which touches the metal portion of the crystal holder also helps keep the crystal at nearly constant temperature.

An alternate solution is to purchase a crystal oven and operate the crystal in this oven in place of the crystal sockets shown. Two crystal sockets are shown, but only one of the sockets, the one to the right facing the front panel, is connected. The other socket is a dummy in which to store the space crystal at the same temperature. To change to the second crystal, simply reverse them in their sockets.

OPERATION AND ADJUSTMENT — Before applying power to the exciter, all tubes should be pulled out of their sockets. Since some stages are only biased by grid current, if the oscillator or amplifiers are not operating properly some of the stages could be drawing excess current. Place the tubes in their sockets one at a time as the adjustment proceeds.

First adjust the transitron oscillator by removing the 3,900-ohm resistor across the inductor (L_1), removing the crystal and shorting out the socket. Set the variable capacitor (C_4) to approximately one-half of maximum capacity; and, with a grid dip meter tune the inductance to the 25-megacycle crystal frequency. Reconnect the 3,900-ohm resistor and place the crystal in its socket. Connect a vacuum tube volt meter (VTVM) on the control grid of the 6CB6 buffer and tune the variable capacitor (C_4) for maximum output voltage.

The next step is to adjust the plate coil (L_2) of the 6CB6 buffer by setting it to 25 megacycles with the grid-dip meter; it can then be repeaked later. The double balance modulator tank circuit (L_4-C_5), also should be tuned to 25 megacycles. The final SSB generator peaking can then be finished after the variable crystal oscillator and other RF stages have been adjusted. The final single sideband adjustments are made after 144-megacycle output is obtained by listening to the signal on a receiver covering the 144-megacycle band.

RF ADJUSTMENTS — Adjustment starts with the variable crystal oscillator (V_{12}). Insert the oscillator tube and the first doubler (V_{13}), then connect a high impedance volt meter — preferably a vacuum tube volt meter — on the grid of the first doubler. Switch the oscillator to *crystal* position, turn the tuning capacitor (C_1) to minimum capacitance and adjust the feedback capacitor (C_2) for maximum negative voltage on the first doubler grid. Then switch the VXO into the *variable* position. Tune the inductance (L_{16}) to minimum value and the negative temperature coefficient capacitor (C_3) to approximately one-half its maximum value. With the VTVM on the grid of the first doubler, tune C_1 across the band and determine if the oscillator is operating over its whole range. If not, adjust either L_{16} or C_3 or both, until the oscillator delivers equal voltage at the grid of V_{13} nearly to that in the crystal position across the band. Adjustment of the oscillator's tuning range is made by listening on the 144 megacycle receiver after the remainder of the rf section is operating.

Next, switch the VXO to *crystal* position, turn C_1 to minimum capacitance, and place the second doubler tube (V_{14}) in its socket. Connect the VTVM to the grid of the mixer stage (V_5) and adjust L_{13} for maximum negative voltage. If no signal voltage is read, adjust L_{14} and L_{15} until a signal is obtained on the mixer grid, then peak L_{13}, L_{14} and L_{15}. The VTVM on the grid of the mixer stage will probably affect the settings of L_{14} and L_{15}, but this will be peaked again later.

Next, remove the grid bias, screen and plate voltages to the 6360 (V_7) output tube. Connect the VTVM to the grid bias supply of the 6360. Then insert carrier by turning the carrier balance controls off center (they probably will be off balance anyway) and with an insulated tool, adjust L_6 by spreading or compressing the coil for maximum negative voltage on the grid of the 6360. Since the other inductors must also be adjusted the signal at L_9 may be low. If so, tentative adjustments of L_7, L_8 and L_9 can be made. After the inductors have been peaked try adjusting the coupling between L_6 and L_7, and L_8 and then L_9, for a maximum DC voltage of 18 to 25 volts at the grid of the 6360.

Then apply the screen, plate and bias voltages to the 6360 and connect a 50 ohm dummy load to the output connector, J_2. Then dip the plate current of the 6360 with C_6 and develop maximum RF signal out by adjusting the series loading capacitor (C_7). This is best accomplished by alternately switching the meter from plate current to RF voltage. The bias adjustment of the 6360 should be set to a no signal plate current of 20 Ma. (CW Key Open), and with a maximum unbalance of the signal sideband generator a plate current of 50 to 60 ma. will be drawn by the 6360.

VXO FREQUENCY ADJUSTMENT — Most 5955-kilocycle crystals will have a pulling range of 200 to 300 kilocycles at 144 megacycles. However, if L_{16} is set for maximum pulling, the frequency will not be very stable. Therefore, it is recommended that a pulling range of about 100 kilocycles be used. To make this adjustment, set the VXO to crystal position and (C_2) to minimum capacitance. This will result in the highest frequency that can be obtained. Next switch the oscillator to VXO position and usually the frequency will shift slightly lower. Now tune C_1 toward its maximum value and check the amount of frequency change. If it is too great, reduce the value of L_{16}, or if it is too small increase the value of L_{16}.

Upon setting the frequency range to the desired value a check of the output voltage of the oscillator should then be made by placing a VTVM on the grid of the 6AS6 mixer stage and tuning across the band. If the variation is greater than 2 to 1 it will be necessary to adjust the feedback capacitor, C_2. This adjustment will also change the tuning range, so it will be necessary to make several checks to set both the tuning range and keep the mixer grid voltage variation to a minimum.

SIDEBAND GENERATOR ADJUSTMENTS — To insure that all of the circuits are peaked correctly, the entire RF adjustment procedure should be repeated with the tuning capacitor (C_1) set to the center of the tuning band. The drive at the grid of the 6360 is best checked with the screen, plate and bias voltages removed.

Tune the exciter to a convenient frequency on the receiver (set for CW reception) and adjust the carrier balance potentiometers (R_5 and R_6) for minimum output after placing the mode switch in the suppressed carrier position. After adjusting the carrier balance and noting the frequency, set the sideband selector (S_2) to either upper or lower sideband, depending on which may be used the most. Assuming S_2 on upper sideband, insert a 1000-cycle audio tone into the audio input (J_1) from an audio signal generator. With the receiver still set for CW and maximum selectivity, carefully tune to both sides of the carrier. Both sidebands will appear as a tone 1,000 cycles on either side of the carrier frequency before it was suppressed.

Then adjusting for upper sideband, tune the receiver to the lowest frequency sideband, being careful to choose the first signal encountered on the low side of the carrier frequency. Other signals will appear which are second, third and fourth order harmonics of the injected 1,000-cycle signal. These will be suppressed by adjusting potentiometers R_7 and R_8 until the signal on the lower sideband is at minimum. Potentiometer R_2, the phasing adjustment, will not be centered, but will be near one end of the adjustment range.

Now switch the receiver to AM, leaving the selectivity in its sharpest position and note the S meter reading. Carefully tune past the carrier toward the upper sideband and note its value on the S meter. If the receiver S meter is correctly calibrated the amount of suppression can be noted by comparing the relative readings of the upper and lower sidebands. Further adjustments are then made until the difference between upper and lower sideband is approximately 30 db, or 5 S units.

Now switch the sideband mode to lower sideband and tune the receiver — still in the AM position — from the lower to the upper sidebands. The lower sideband is now maximum and the upper sideband is suppressed. However, sideband suppression may not be as great in this position. This is not a fault of construction or design — it is simply characteristic of a phasing type sideband rig. Next, switch the sideband selector to double sideband and both sidebands should be approximately equal.

VOICE OPERATED CONTROL ADJUSTMENTS — By talking into the microphone at a normal level after making the previous adjustments on the sideband generator, increase potentiometer R_4 until the voice control relay picks up at a suitable level. Then with the microphone placed in the normal operating position, and receiver gain adjusted for normal speaker volume, adjust the anti-trip potentiometer (R_5), so that the receiver output does not operate the voice controlled relay. The hold-in time constant of the relay can then be adjusted as desired from the front panel adjustment marked VOX HOLD (R_6).

AM AND CW MODE ADJUSTMENT — Adjustment of the exciter in the CW and AM modes is best accomplished by determining the maximum CW input power of the linear amplifier if one is to be used. Simply place the mode selector switch on CW, close the key and increase the CW set potentiometer (R_9) until the linear amplifier is drawing full rated power input. This completes adjustment of the CW mode.

The amplitude modulated mode may then be adjusted by first switching to suppressed carrier and adjusting the audio gain control so that the linear amplifier is being driven to its normal output. Then switch to amplitude modulated mode and, without speaking, adjust the AM SET potentiometer (R_{10}) until the plate current drawn by the amplifier is approximately one-half of its rated value. The carrier is then set at one-fourth the maximum CW power output.

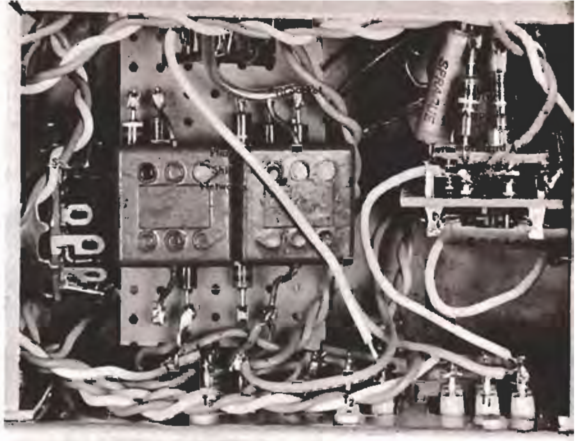

CLOSEUP VIEW of the audio phase-shift networks on terminal board inside right end of upper chassis unit. Terminals on T_1, T_2 and T_3 extend up from beneath the main chassis. When wiring sub-chassis, leave leads for making these connections after mounting upper unit.

Upon speaking into the microphone the input amplitude will then go up to its normal value or in other words ¾ of the power will then be transmitted bearing the speech. This adjustment is approximately 400 percent over modulation but as previously mentioned is very readable by almost any receiver. If normal AM is desired then the carrier should be increased by adjustment of potentiometer R_{10} until the final amplifier is drawing a plate current of two-thirds its maximum value. This provides 100 percent modulation.

OPERATION — After completing the previous adjustments the power output is controlled by the audio gain control.

It may be found that for some crystals that the VXO will not oscillate if power is applied when the VXO is on variable tuning and the tuning capacitor (C_1) is near the low end of the range. Therefore, if this occurs it is recommended that the VXO be switched to crystal position and then returned to variable. This will start the oscillator.

The spotting switch (S_5) on the front panel applies power to exciter, with the exception of the RF amplifiers, therefore allowing the station receiver to hear the transmitter for zero-beat purposes.

Part II of this special report on VHF SSB will be published in the September-October 1962 issue of *G-E HAM NEWS*. It will contain circuit and construction details on a phasing type SSB generator which operates directly on 144 megacycles; circuit ideas for heterodyning SSB signals to 144 megacycles; a detailed discussion of the function of the transitron oscillator; and the circuit and construction data for the voltage-regulated power supply for the exciter in this issue.

DETAIL VIEW of the VXO compartment in the upper chassis. The VXO-CRYSTAL switch (S_3) is below the coupling on the rear of the MCN tuning dial. Note the loose coupling between coils L_{14} and L_{15} in the second doubler-VHF mixer circuit.

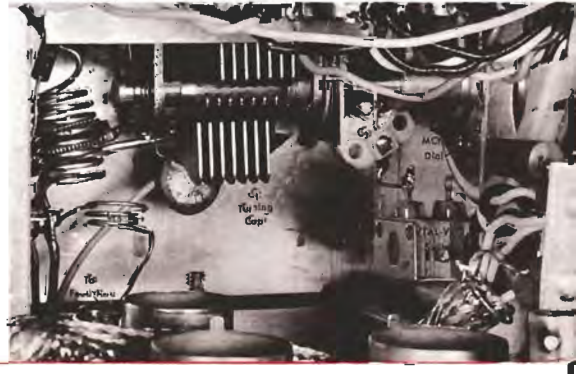

SCANNING THE SPECTRUM

NEW G-E COMPACTRONS SIMPLIFY TV

Radio amateurs have a dramatic demonstration of how General Electric's new line of compactron receiving tubes can simplify electronic equipment in the industry trend toward "compactronized" television receivers.

Tube complements in these new TV sets is reduced about one third through substituting multifunction compactrons for conventional receiving tubes in most circuits. Amateurs can expect the same degree of simplification in amateur radio equipment using compactrons.

In the latest line of General Electric television receivers, an average of 7 or 8 compactrons per chassis replaces 11 to 13 conventional tubes used in preceding models. A total of 19 compactrons replaces 30 tubes in the three basic chassis which go into all 23-inch table and console TV's: in the 19-inch "Designer" series, the 19-inch portable "Century" and "Celebrity" models; and the new lightweight, 22-pound 16-inch "Escort" model.

The photo below shows 8 compactrons and 1 standard tube (left) taking over the complement of the basic chassis of the 16-inch "Escort" portable TV. At the right are the 18 conventional tubes which comprised the tube complement in a typical TV basic chassis of several years ago.

Making the comparison is Christopher D. McCool, Home Convenience Products Design Engineering Manager of G-E's Receiving Tube Department, who spearheaded the compactron development program. Neither the power rectifier or tuner tubes are included in the examples.

The multi-function compactron types have many applications in equipment having a number of circuit functions — like the TV receivers described above. Amateur receivers sideband exciters and transceivers can be simplified with multi-function compactrons in the small signal circuits. And, horizontal sweep type power compactrons are available to perform the tasks to which conventional sweep tubes are usually assigned in amateur radio gear.

G-E HAM NEWS plans to publish articles on "compactronized" equipment for the home constructor in coming issues. Watch for them!

G-E COMPACTRONS IN HAM GEAR

General Electric's new compactron multi-function receiving tubes are appearing in the latest amateur radio equipment now coming on the market. One of the first such equipments is the new *Hammarlund* HX-50 sideband transmitter. In it, a 6C10 triple-triode compactron (each section is similar to those in a 12AX7-A miniature twin triode) is used as the input audio amplifier, audio modulator for the balanced modulator, and the carrier oscillator. One triode section performs each of these three functions.

This is a good example of how G-E's new compactrons can simplify electronic equipment through combining functions usually performed by two or three conventional tubes into one compact envelope. A list of compactron types was published on page 8 of the January-February, 1962 issue (Vol. 17 No. 1) of *G-E HAM NEWS*. A supplement to this list containing a number of new types will be published in the September-October, 1962 issue.

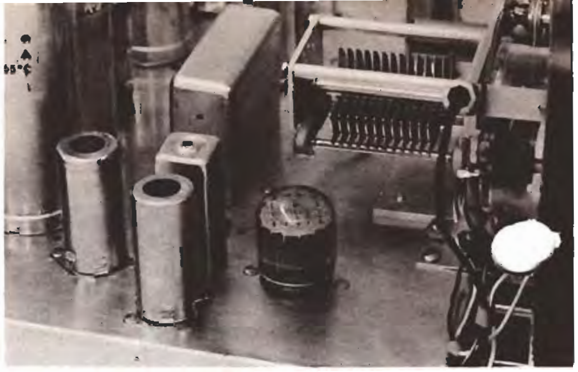

6C10 TRIPLE TRIODE compactron in the new *Hammarlund* HX-50 Sideband transmitter.

The HX-50 transmitter, incidentally, covers several 1-megacycle segments which include the 3.5, 7, 14, 21 and 28-megacycle amateur bands. It will run up to 130 watts P.E.P. input, and has all of the latest features.

G-E VHF FM GEAR AT K7USA

The VHF FM stations on the 50 and 144-megacycle bands at K7USA the amateur radio station at the Century 21 exhibition in Seattle have been furnished by General Electric's Communication Products Department located in Lynchburg Va.

The 80-watt deck-type base stations, the same as supplied to hundreds of commercial VHF communications users, operate on the national amateur FM calling frequencies of 52.525 and 146-146.940 megacycles. In addition, frequencies of 146.580, 146.760 and 147.330 megacycles are available for casual operating to keep the calling frequencies clear.

If you are planning to attend the Century 21 exhibition in Seattle this summer, and have VHF FM mobile equipment in your car, be sure to take along crystals which cover the above channels so that you can contact K7USA.

HAM NEWS

Available **FREE** from your G-E Tube Distributor

JULY-AUGUST, 1962
Vol. 17, No. 4